EKİN ENDÜSTRİYEL

COMPANY PRESENTATION

MIT mitrojen DORIS magneto AIRCO TRUEVALVE myra inoxen INNSUN

EKIN

ABOUT US

01

EKIN

About us

‘new generation ENGENEERING’

www.ekinendustriyel.com

Ekin was established in 2005, with dreams of manufacturing exchangers in Türkiye. Following customer satisfaction principle and preserving our dynamic structure, we continue manufacturing high quality products since the very first day.

In addition to industry leader position in the country, MIT branded products are now delivered to 135 countries all over the world.

EKIN

Our Short History

2005 - 2023

2005

Ekin started operations in Istanbul in 2005.

2006

We managed to manufacture the first plate heat exchanger in Türkiye.

2007

In addition to domestic plate heat exchangers, we started manufacturing pressure vessels.

EKIN

2008

We added tubular heat exchangers to our product range.

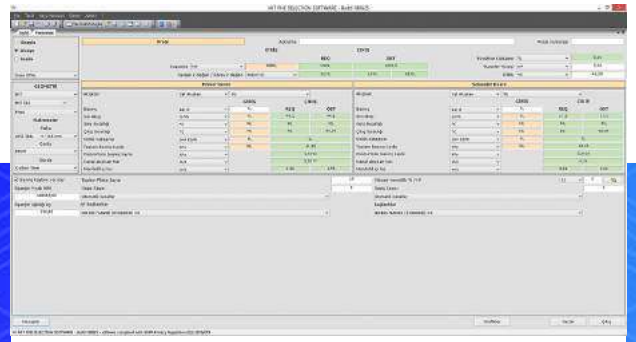

2009

Our sales engineers started utilizing exchanger selection program to determine the best solutions to meet our customers' needs.

2010

We added expansion tanks to our product range.

EKIN

2011

Ekin Endüstriyel became the first Türkiye company which started to produce brazed plate heat exchangers.

2012

MIT branded products have reached 60 countries.

2013

Ekin moved its headquarters to a new location in Des industrial site to continue operations.

EKIN

2014

Foundation of our Kırklareli factory was laid to meet our manufacturing area requirements.

2015

Fluid transfer products were introduced at Ekin to serve our customers.

2016

After getting foundations laid in 2014, our factory in Kırklareli started production in 2016.

EKIN

2017

We started providing services in various engineering fields to meet our customers' expectations with package system solutions.

2018

We added MIT Cooling Towers, Chillers and Steam Generators in our product range. Regional directorates started operations in 4 different countries.

2019

We added MIT boilers and Innsun solar energy systems to our product range.

EKIN

2020

We added the Truevalve valve group to our product range.

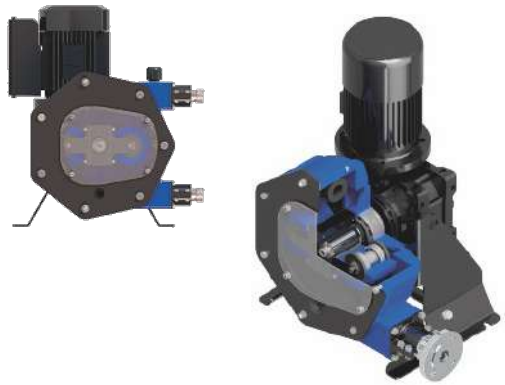

2021

We added the Peribest brand to our Fluid Transfer product range.

2022

We were rewarded for the second company exporting to the most countries in climatization industry in 2021.

EKIN

“Expert Engineers, Premium Solutions”

Providing engineering solutions for problems and requirements in its field of operation, Ekin also offers maintenance, assistance, technical support, and other supplementary services.

Today Ekin is one of the leaders in its sector. We are experts in heat transfer, fluid transfer, pressure vessels, package systems, food systems, and energy systems.


M+T

EKIN

COMPANY INFORMATION

02

Our Corporate Identity

‘time to CHANGE’

www.ekinendustriyel.com

There is a success story behind the fact that Ekin is a leading actor in its sector since 2005. This success was achieved with cumulative experience of our expert engineers.

We in Ekin have always been racing ourselves with the dream of ensuring customer satisfaction and becoming the best in our field, taking confident steps in becoming a better company. Our desire to become a leading actor in heating & cooling market wasn’t only for ourselves; we also truly wanted this in our hearts for the sake of our country, and thus we adopted ‘MIT’ (Made in Türkiye) brand.

Since 2005, we have been meeting our customers’ requirements with our ‘MIT’ branded products, and raising the bar higher. Additionally, we constantly work on new designs and adopt latest generation cutting edge technology in accordance with our innovative approach.

We combine our experience in both manufacturing and marketing fields with the help of our expert engineers’ knowledge and experience, offering our customers the best solutions in every field.

Our Policies

‘Knowledge
EXPERIENCE
professionalism’

www.ekinendustriyel.com

OUR MISSION

Our mission is to utilize our resources at maximum effectiveness and efficiency to provide sustainable benefits for our stakeholders, while acting within humane and ethical values.

OUR VISION

Our vision is to make MIT a recognized and leading global brand in all the fields Ekin operates.

OUR POLICIES

Our Quality Policy:

Manufacturing products that meet the standards accepted worldwide, without sacrificing product quality.

Our Health and Safety Policy:

We aim to establish a healthy and safe working environment under a health and safety management based on constant development, while ensuring compliance with domestic and international legislative regulations.


MIT
Endustriyel Ürünler
MIT
Isıtma_Soğutma
ERİN ENDÜSTRİYEL


EKİN ENDÜSTRİYEL
MIT
14
EKIN ENDÜSTRIYEL


EKİN ENDÜSTRİYEL
MIT
EKİN ENDÜSTRİYEL
www.ekinendustriyel.com
MIT

EKIN

FIELDS OF ACTIVITY

03

PRODUCT RANGE

HEAT TRANSFER PRODUCTS

- Gasketed Plate Heat Exchangers
- Brazed Heat Exchangers
- Shell & Tube Heat Exchangers
- Evaporators and Condensers
- DC Fan Driven Oil Coolers
- Heat Coils
- Serpentines / Radiators / Economizers

PRESSURE VESSELS

- Water Heater Tanks
- Water Storage Tanks
- Buffer Tanks
- Expansion Tanks
- Stainless Steel Tanks
- Balance Tanks / Dirt Separators / Air Separators / Air Tubes
- Steam Separators
- Pressured Air Tanks
- Neutralization Units

INDUSTRIAL AND FOOD GRADE SYSTEMS

- Heat Stations
- Industrial Process Systems
- Dosing Systems
- Substations
- Thermoregulators
- Pasteurizers
- CIP and Hygienic Process Systems
- Hygienic Storage and Process Tanks
- Homogenizers
- Turn-key Projects

FLUID TRANSFER PRODUCTS

- Lobe Pumps
- Hygienic Centrifugal Pumps
- Twin Screw Pumps
- Gear Pumps
- Magnetic Drive Pumps / Thermoplastic Pumps
- Dosing Pumps
- Air Operated Double Diaphragm Pumps (AODD)
- Drum Pumps
- Monopumps
- Peristaltic (Hose) Pumps
- Centrifugal Blowers
- Roots Blowers
- Turbo Blowers

FLOW CONTROL UNITS

- Butterfly Valves
- Ball Valves
- Globe Valves
- Knife Gate Valves
- Actuators
- Check Valves and Strainers
- Thermoplastic Valves

ENERGY SYSTEMS

- Boilers
- Steam Generators
- Solar Collectors
- Chillers
- Cooling Towers


MIT

EKIN

www.ekinendustriyel.com


EKIN ENDUSTRIYEL
TYPE/MODEL
YR27
CAPACITY
4500KN
YEAR
2021
SERIAL NUMBER
2020072004
POWER/MOTOR
22 KW
STROKE
200 mm
WORKING VOLTAGE
380 Volt
DAY LIGHT
450 mm
FREQUENCY
50 Hz
TABLE SIZE
1000×2000 mm
MAX PRESSURE
79. 4 Mpa
CYLINDER ϕ
850 mm
SLIDE FAST APPROACH SPEED
50 mm/s
SLIDE FAST RETURN SPEED
30 mm/s
YR27-4500 SHEET FORMING HYDRAULIC PRESS
EKIN ENDÜSTRIYEL
LNTEC

EKIN

www.ekinendustriyel.com

EKIN

www.ekinendustriyel.com

EKIN

www.ekinendustriyel.com

EKIN

www.ekinendustriyel.com

EKIN

- HEAT TRANSFER PRODUCTS
- PRESSURE VESSELS
- INDUSTRIAL AND FOOD GRADE SYSTEMS
- FLUID TRANSFER PRODUCTS
- FLOW CONTROL UNITS
- ENERGY SYSTEMS

www.ekinendustriyel.com

EKIN

Plate Heat Exchangers

Plate Heat Exchangers

Plate Heat Exchangers

Plate Heat Exchangers

HEAT TRANSFER PRODUCTS

EKIN

Plate Heat Exchangers

Plate Heat Exchangers

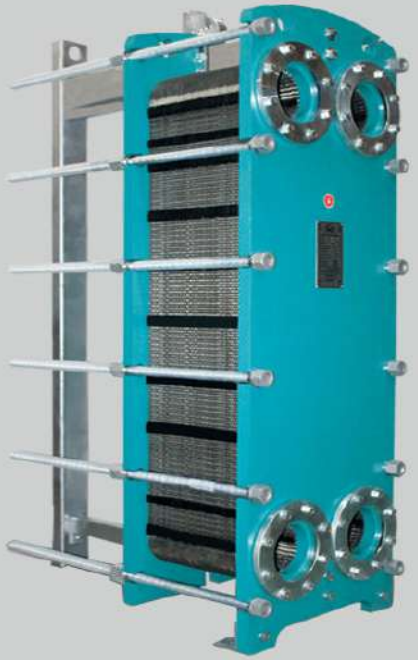

Plate Heat Exchangers

Plate Heat Exchangers

HEAT TRANSFER PRODUCTS

EKIN

Brazed Heat Exchangers

Brazed Heat Exchangers

Brazed Heat Exchangers

Brazed Heat Exchangers

HEAT TRANSFER PRODUCTS

EKIN

Brazed Heat Exchangers

Brazed Heat Exchangers

Brazed Heat Exchangers

Brazed Heat Exchangers

HEAT TRANSFER PRODUCTS


MIT

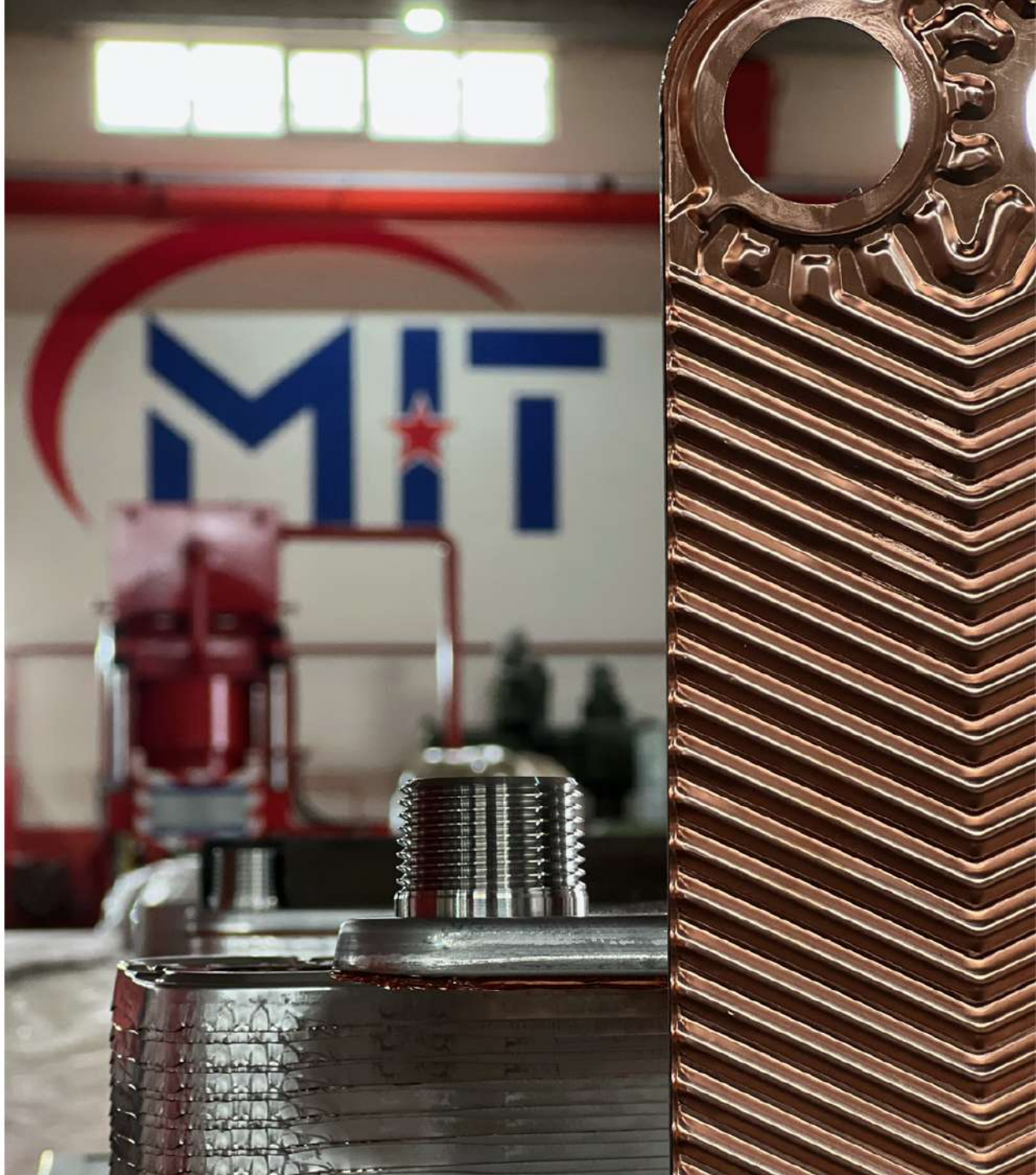
MIT

EKIN

Tube Heat Exchangers

Tube Heat Exchangers

Tube Heat Exchangers

Tube Heat Exchangers

HEAT TRANSFER PRODUCTS

EKIN

Tube Heat Exchangers

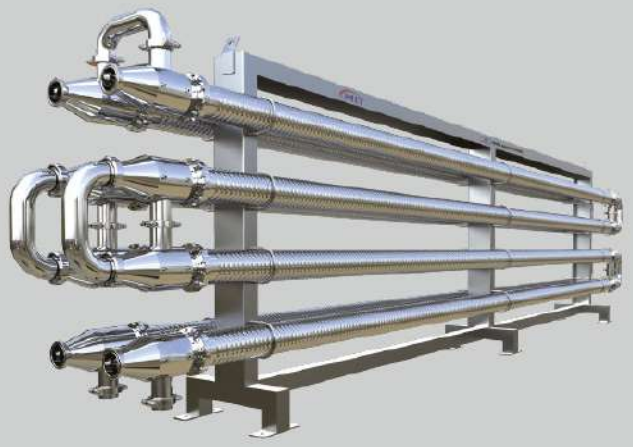

Tube Heat Exchangers

Tube Heat Exchangers

Tube Heat Exchangers

HEAT TRANSFER PRODUCTS

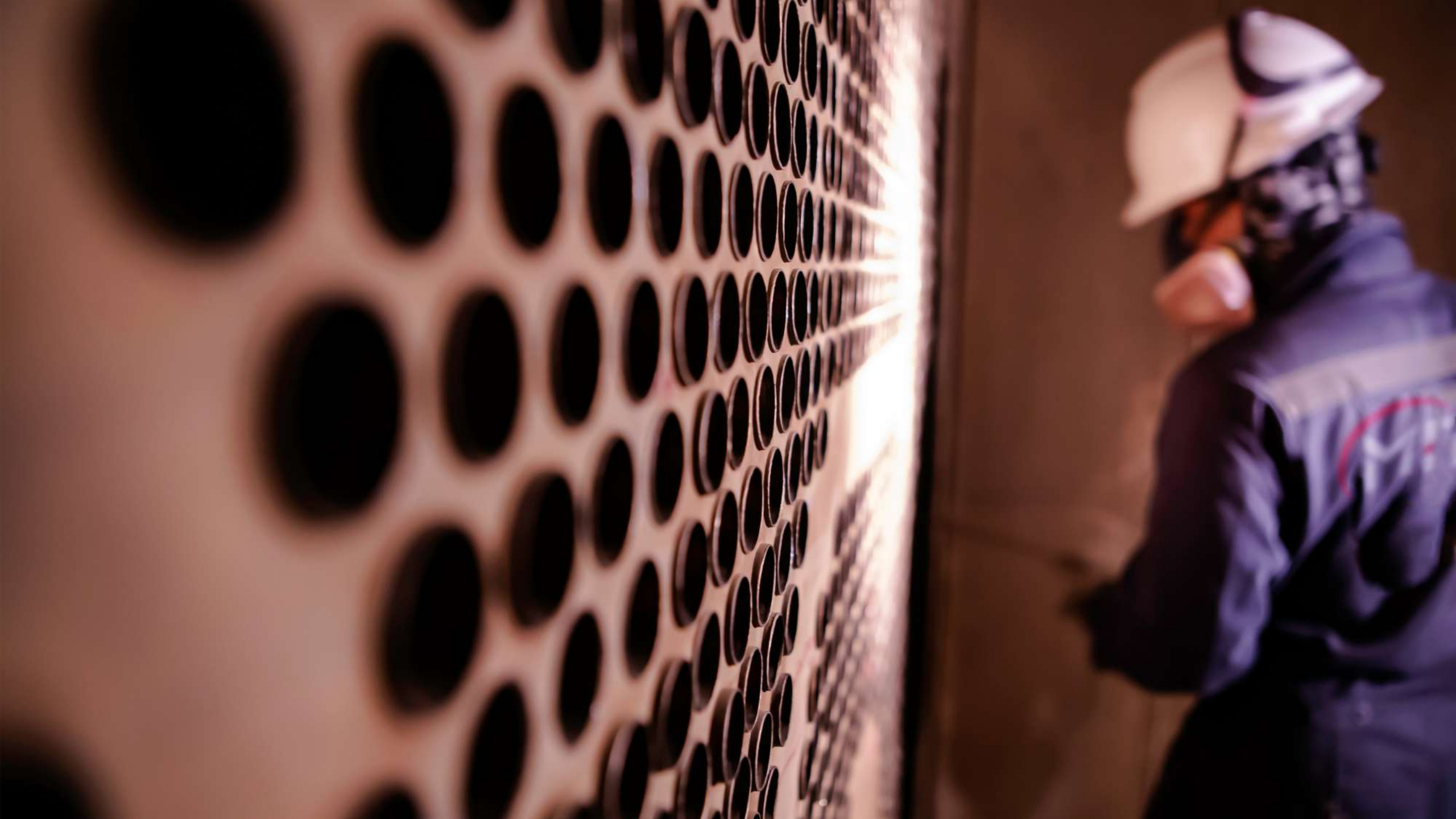

EKIN

Fan Oil Exchangers

Serpentines / **Radiators** / **Economizers**

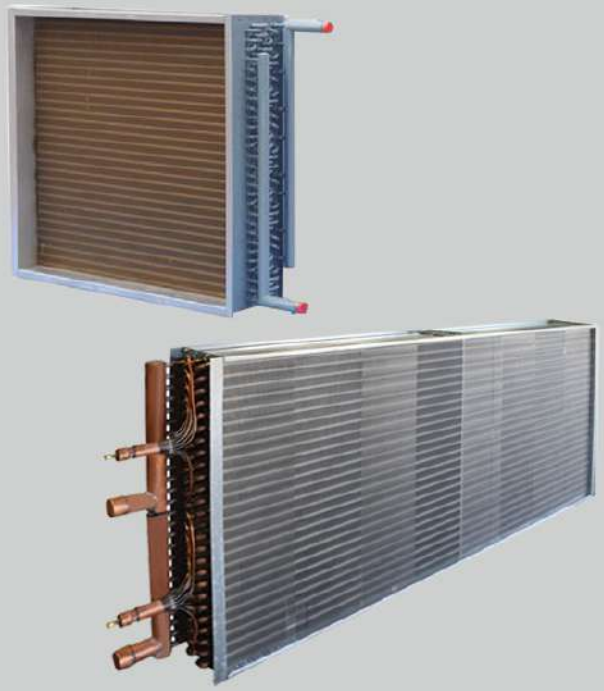

Heat Coils

Eavaporators and Condensers

HEAT TRANSFER PRODUCTS

EKIN

Buffer Tank

Accumulation Tank

Closed Expansion Tanks

Boiler

PRESSURE VESSELS

Boy


EKIN

EKIN

Separator Vessels

Air Bottle

Stainless Steal Tanks

Stainless Steal Tanks

PRESSURE VESSELS

Boy


EKIN
MIT

EKIN

Steam Separators

Neutralization Units

Pressured Air Tanks

Pressured Air Tanks

PRESSURE VESSELS

Boy


MIT

EKIN

Steam Area Heating

Isı Sabitleyici

Local Heating

Heat Stabilizer

INDUSTRIAL AND FOOD GRADE SYSTEMS


EKİN ENDÜSTRİYEL


KİMYASALLARA DAYANIKLI ELDİVEN KULLAN
EKİN ENDÜSTRİYEL

EKIN

Thermoregulators

Dosing Systems

Heat Stations

Substations

INDUSTRIAL AND FOOD GRADE SYSTEMS

EKIN

Cream Pasteurizer

Milk Pasteurizer

CIP Systems

Agitation Tank

Fruit Juice Pasteurizer

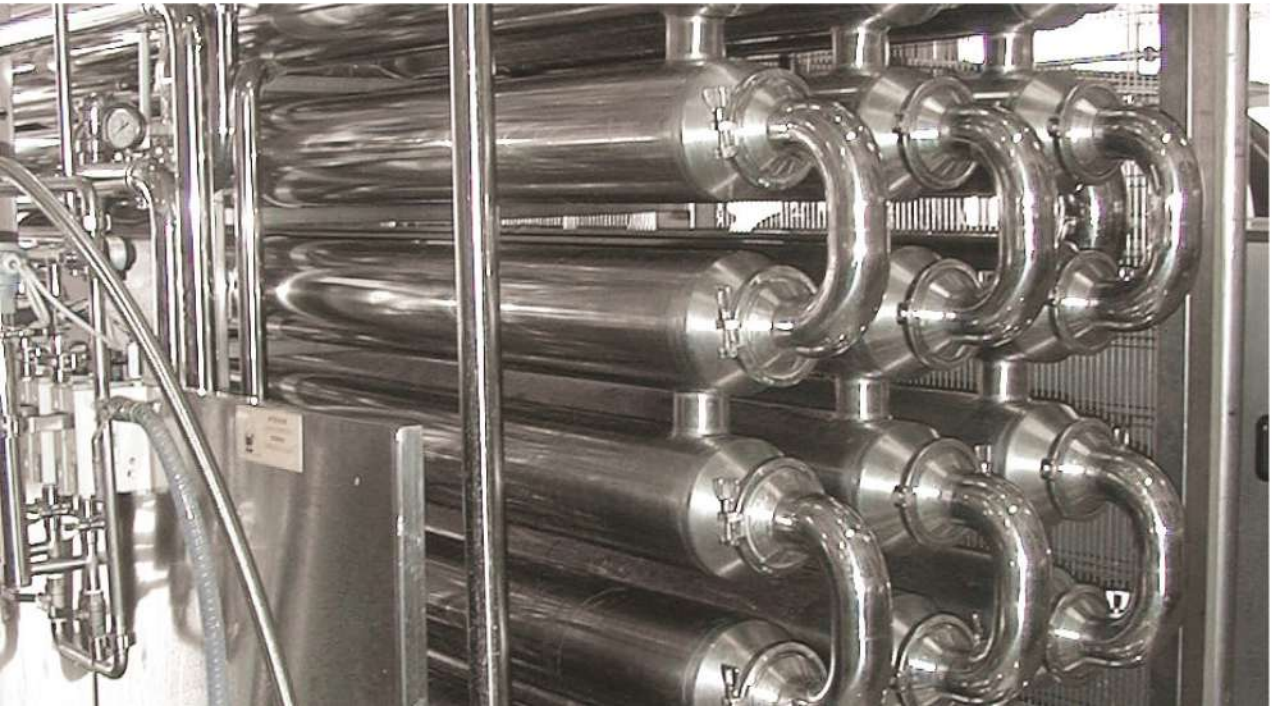

EKIN

Hygienic Centrifuge Pumps

Roots Blowers

Lobe Pumps

Air Diaphragm Pumps

FLUID TRANSFER PRODUCTS

EKIN

Lobe Pumps

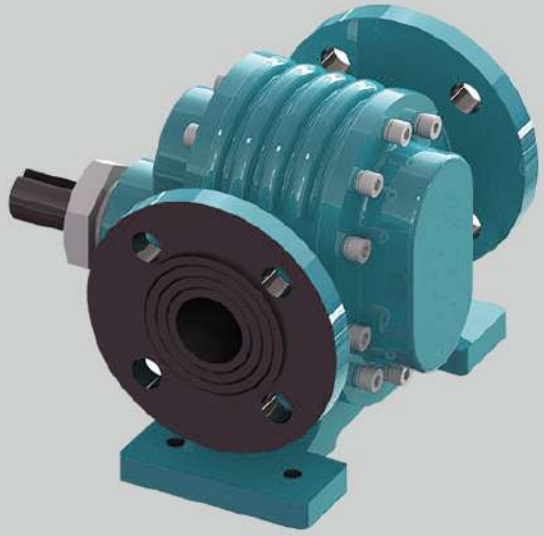

Gear Pumps

Turbo Blowers

Twin Screw Pumps

FLUID TRANSFER PRODUCTS

EKIN

Dino Drum Pumps

Air Operated Double Diaphragm Pumps

Magnetic Drive Pumps

Dosing Pumps

FLUID TRANSFER PRODUCTS


EKIN

EKIN

Butterfly Valves

Ball Valves

Knife Valves

Globe Valves

FLOW CONTROL UNITS


DN200
16
DN250

EKIN

ENERGY SYSTEMS

Chillers

Cooling Towers

Boilers

Steam Generators

Solar Collectors


MIT
EKIN ENDÜSTRİYEL
MIT
EKIN ENDÜSTRİYEL
MIT
EKIN ENDÜSTRİYEL

EKIN

SECTOR SPECIFIC SOLUTIONS

www.ekinendustriyel.com

EKIN

PRODUCTION NUMBERS

04

EKIN

Annual Production Numbers

PRODUCTION NUMBERS PER YEAR

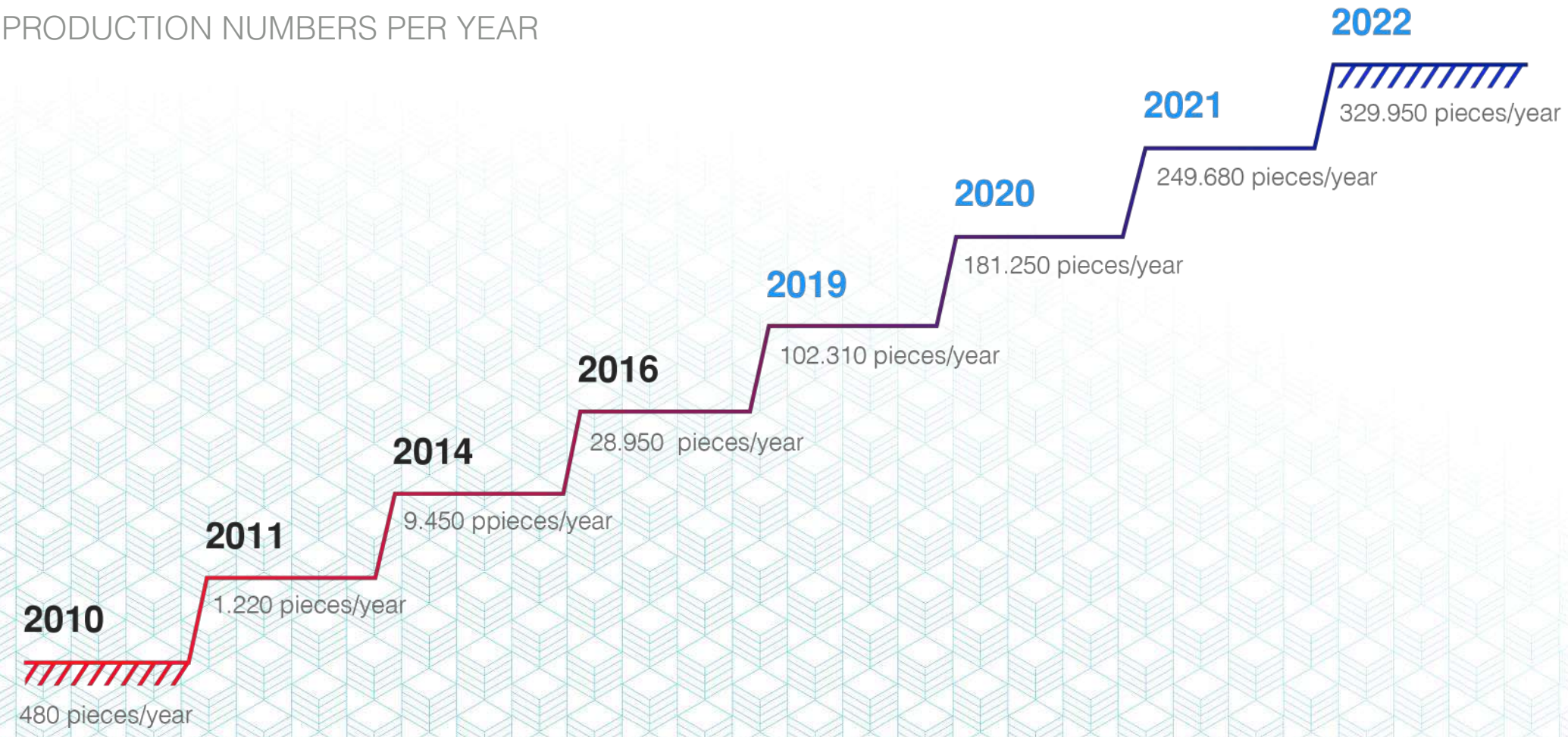

www.ekinendustriyel.com

EKIN

INTERNATIONAL SALES DISTRIBUTION

05

www.ekinendustriyel.com

EKIN

EXPORT DISTRIBUTION

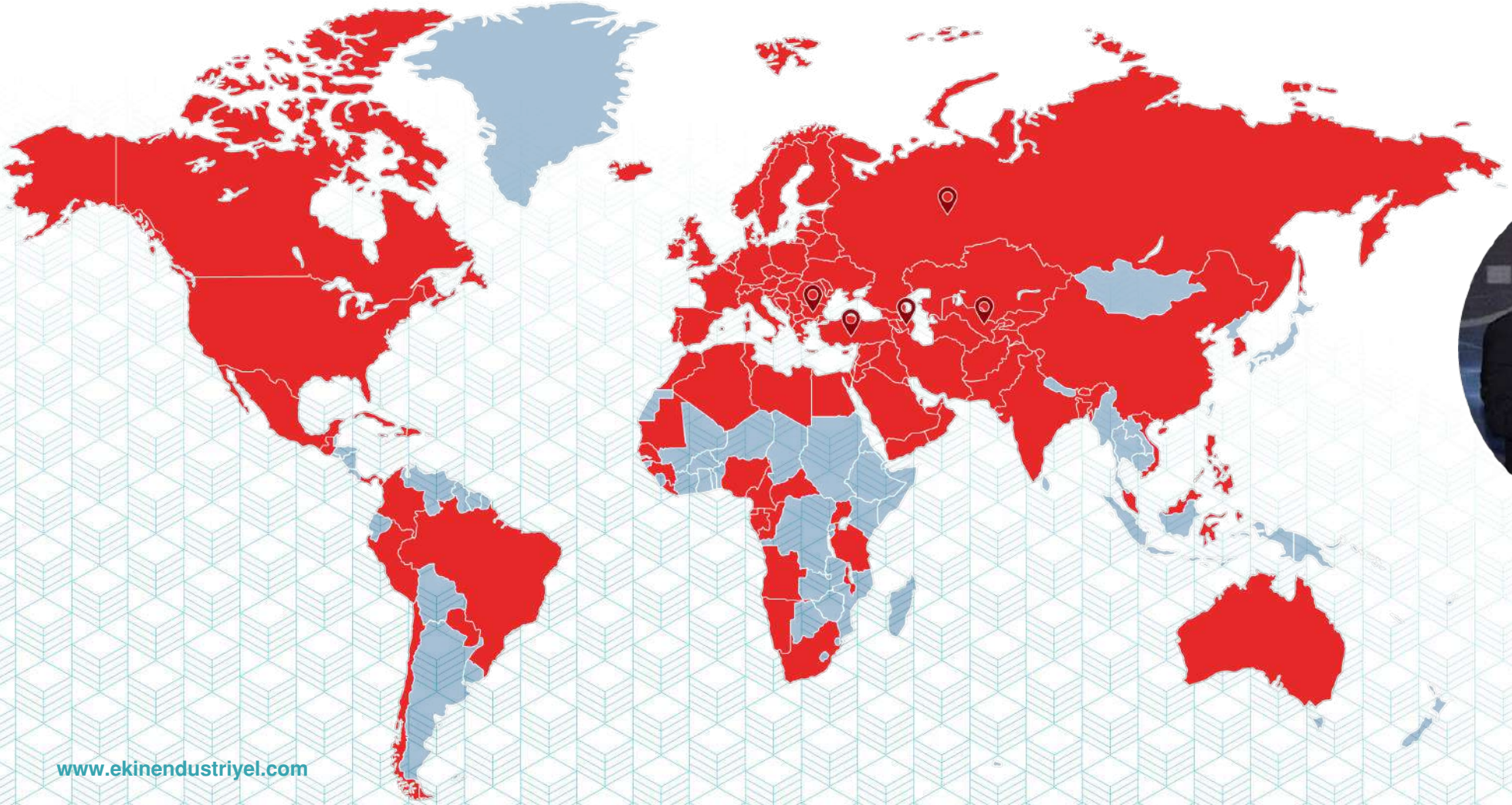

The second company in Türkiye that exports to the most different countries in 2021 , According to ISIB (Türkiye HVAC-R)

www.ekinendustriyel.com

EKIN

QUALITY MANAGEMENT SYSTEM

06

www.ekinendustriyel.com

EKIN

Ekin has received ISO 9001:2015 Quality Management System certificate, including all production, domestic and international sales, and post-sales processes to ensure maximum customer satisfaction, aiming to observe all kinds of impacts from all activities and provide constant improvement.

We implemented a series of quality control systems to make sure our products are even beyond the legal standards and requirements. Our products have TSE, CE, Rosh, and FDA quality certificates.

TSE

ISO

CE

TÜV NORD

EAC

RoHS 2011/65/EU

FDA

WRAS WATER REGULATIONS ADVISORY SCHEME

TURQUM® TURKISH QUALITY OF MACHINERY

EKIN

OUR TEAM

07

Our Team

Ekin employs expert engineers in their respective fields to provide proactive solutions. Our team works with devotion to provide unconditional customer satisfaction; they constantly raise the bar for success in products, services, and processes to ensure customer loyalty.

We are pleased to share the knowledge we gathered over long years with our valuable customers.

Ekin will continue to be your best solution partner in all applications regarding heating and cooling processes.

EKIN

www.ekinendustriyel.com

EKIN

EKİN ACADEMY

08

www.ekinendustriyel.com

EKIN

EKİNAKADEMİ

Ekin is well aware of the fact that progress in the field can only be possible with constant learning and improvement.

Established with this awareness, Ekin Academy aims to ensure high quality standards and constant development, train successful employees with a solid service mentality, who are trained with modern methods to be competent in their field and add value to the society through social responsibility projects.

Ekin Academy prepares training and development programs for our employees to both create a difference in their personal development and make direct contributions to a distinguishable difference in business processes.

Our training modules prepared by our expert staff for our business partners and customers provide training and education support regarding commence, operation, maintenance, and repair processes for our products.
We are happy and proud to add value to society through collaborations with universities for corporate social responsibility projects, where engineer candidate students who aim to find employment in fields Ekin operates in get a chance to meet sector practices and experience their theoretical information in practical applications.

www.ekinendustriyel.com

EKIN

OUR REFERENCES

09

EKIN

OUR REFERENCES

Some Companies We Have Been Working With

PLIVA	Coca-Cola	TOYOTA	Nestlé	Henkel	Carlsberg
Unilever	FIAT	LAFARGE	SIEMENS	Ford	DANONE
	VESTEL	pepsi		weber SAINT-GOBAIN	Qatar Pharma قطر فارما

www.ekinendustriyel.com

EKIN

OUR REFERENCES

Some Companies We Have Been Working With

BOSCH	PHILIPS	arçelik	BORUSAN MANNESMANN	KARSAN	Linde
TUBORG	Tüpraş	ERDEMİR	Türk Traktör	Polisan	petlas
TURKISH AIRLINES	ETi Lezzet Uygarlığı	sütaş	nuh	PF POLİFARMA	ABDİİBRAHİM

EKIN

OUR MOBILE APP

EKİNASİSTAN

available now!

Download on the App Store

Hemen indir!

GET IT ON Google Play

Hemen indir!

ekin asistan

www.ekinendustriyel.com

EKİN ENDÜSTRİYEL

THANK YOU

MIT mitrojen DORIS magneto AIRCO TRUEVALVE myra inoxen INNSUN

www.ekinendustriyel.com

EKİN ENDÜSTRİYEL

General Product Catalogue

Follow us on social media!

www.instagram.com/**ekinendustriyel**

www.facebook.com/**ekinendustriyel**

www.youtube.com/**ekinendustriyel**

www.linkedin.com/company/**ekinendustriyel**

www.twitter.com/**ekinendustriyel**

www.soundcloud.com/**ekinendustriyel**

www.spotify.com/**ekin endustriyel**

EKİN ENDÜSTRİYEL
Isıtma-Soğutma San. Tic. Ltd. Şti.

The first condition of innovation is to question.
And the first condition of sustainable innovation is to question constantly.

The journey of innovation has started with a question for us too: “How can we develop value-added technologies in Turkey?”. First turning point in this long journey was the birth of MIT (Made in Turkey) brand. MIT made us the first plate heat exchanger producer of Turkey and it’s founding vision was not to become a local alternative, it was to build a high-quality brand that can compete on a global level.

While we are working towards this goal in the past 15 years, our products and processes deemed worthy for documentation by many national and international quality assessment institutions such as ISO, TSE, CE, GOST and many more. This was the natural outcome of our constant questioning of the status-quo and our desire to outperform ourselves.

New Generation Engineering

With our engineering approach that focuses on the process, not the problem, we do not just specialize in a product, we consider the entire ecosystem of that product. Ergo, we produce all the other components of a system in addition to plate heat exchangers and we focus on the constant development of engineering staff required to provide an end-to-end application.

We provide a “solution” rather than a product with our business development, presales, sales and after sales services provided by our expert engineers.

In our 15th year, we continue to grow as a solution partner for projects that need high technology in more than 60 countries with our internationally approved high-quality plate heat exchangers; components such as accumulation tanks, boilers, industrial pumps and installation materials that completes these exchangers to form a system; and complementary services provided by our expert engineer staff.

PRODUCT RANGE

HEAT TRANSFER PRODUCTS

- Gasketed Plate Heat Exchangers
- Brazed Heat Exchangers
- Shell & Tube Heat Exchangers
- Evaporators and Condensers
- DC Fan Driven Oil Coolers
- Heat Coils
- Serpentines / Radiators / Economizers

PRESSURE VESSELS

- Water Heater Tanks
- Water Storage Tanks
- Buffer Tanks
- Expansion Tanks
- Stainless Steel Tanks
- Balance Tanks / Dirt Separators / Air Separators / Air Tubes
- Steam Separators
- Pressured Air Tanks
- Neutralization Units

INDUSTRIAL AND FOOD GRADE SYSTEMS

- Heat Stations
- Industrial Process Systems
- Dosing Systems
- Substations
- Thermoregulators
- Pasteurizers
- CIP and Hygienic Process Systems
- Hygienic Storage and Process Tanks
- Homogenizers
- Turn-key Projects

FLUID TRANSFER PRODUCTS

- Lobe Pumps
- Hygienic Centrifugal Pumps
- Twin Screw Pumps
- Gear Pumps
- Magnetic Drive Pumps / Thermoplastic Pumps
- Dosing Pumps
- Air Operated Double Diaphragm Pumps (AODD)
- Drum Pumps
- Monopumps
- Centrifugal Blowers
- Roots Blowers
- Turbo Blowers

FLOW CONTROL UNITS

- Butterfly Valves
- Ball Valves
- Globe Valves
- Knife Gate Valves
- Actuators
- Check Valves and Strainers
- Thermoplastic Valves

ENERGY SYSTEMS

- Boilers
- Steam Generators
- Solar Collectors
- Chillers
- Cooling Towers

CONTENTS

From our product quality to ourvalue-added services; we owe our sustainable success to our established corporate culture in every field from employee satisfaction to customer satisfaction.

Our comprehensive corporate policies pave the way for our corporate culture. Thanks to these policies, we design all our activities to offer the same quality regardless of individuals and market dynamics.

CORPORATE POLICIES

The secret of being the leading company in the heating and cooling sector lies in the people. We know in order to make a difference; it is necessary to have the staff to implement these policies flawlessly as well as the corporate policies created by experts in their fields with nearly 20 years of experience. We demonstrate our customer-oriented approach by reflecting the needs and expectations of the industry to our MIT branded products in the best possible way. We are raising the standards of the heating-cooling and air conditioning industry by combining our modern production and marketing understanding with our innovative approach with the valuable experience of our expert engineers.

OUR VISION

To make the MIT brand a reputable and leading global brand in all sectors in which Ekin Endüstriyel operates.

OUR MISSON

To provide sustainable benefit to all our stakeholders by using our resources effectively and efficiently within the framework of human and moral values.

AN ENGINEERING APPROACH FROM SALES TO MAINTENANCE

We offer value added pre and after sale services with our customer satisfaction-oriented approach and deep expertise we are more than happy to share. Thanks to our expert engineers that provide proactive solutions, we focus on making a difference throughout the process, from presales to maintenance. With our "quality product, quality service, quality solution" approach, we are more than a manufacturer and supplier, we are a highly motivated solution partner for all kinds of heating and cooling projects.

QUALITY POLICY

We aim for sustainable quality with a proactive approach that not only meets the need but anticipates it. We bring together an understanding of corporate management based on strategy, not personal thoughts, with effective decision-making mechanisms that include our employees and suppliers. We run an operation based on efficiency and sustainability.

CUSTOMER SATISFACTION

We aim for sustainable quality with a proactive approach that anticipates rather than meets the need. We bring together a corporate management approach based on strategy, not personal considerations, with effective decision-making mechanisms, including our employees and suppliers. We run an operation based on efficiency and sustainability.

ETHICAL VALUES

We conduct all our activities in accordance with the laws and then with ethical values. We believe in growing together and we look for mutual benefit in all our business relationships.

PRIVACY POLICY

All your personal information shared with our company is guaranteed by our ethical values and our processes in compliance with the Law No. 6698 on Protection of Personal Data.

OCCUPATIONAL HEALTH AND SAFETY (OHS) POLICY

We prioritize a single rule in all our operations: "It is the right of every human being to work in a healthy and safe environment." We minimize risks with preventive OHS practices and analyzes. We increase the awareness of our own personnel, our suppliers and subcontractors with trainings and guidance. We work with the understanding of "zero concessions" in compliance with Occupational Health and Safety Regulations and related laws.

ENVIRONMENTAL POLICY

We care about the prevention of waste in natural resource consumption. We keep the environmental pollutants and our wastes under constant control. We constantly inform our employees in this topic. We never compromise on compliance with the relevant legal legislation, and we wholeheartedly support all kinds of work that will benefit environmentally friendly technologies and social awareness.

INFORMATION SECURITYZ

All our information technology operations are protected by our information security processes, which are managed in accordance with ISO 27001 Information Security Management System requirements.

SPONSORSHIP AND SOCIAL RESPONSIBILITY

As Ekin Endüstriyel, we have been supporting projects that will bring social benefit from day one with our desire to develop and grow together. We strive to create and promote a sensitivity towards the future of our country and our world.
With our understanding of "Sponsorship and Social Responsibility", we regularly support various social sharing projects on education, health, and environment with great interest. We work diligently to fulfill our responsibilities towards our employees and heir families, customers, dealers, universities, non-governmental organizations, and other stakeholders.

tIn addition to the projects, we have implemented in a corporate sense, we support the projects created by students with all our strength in order to contribute to the raising of environmentally sensitive generations and to enlighten future generations. In addition, we prioritize the demands and needs of the projects in our region.

in the field of education, we are proud to provide support for many projects carried out domestically and nationwide. As the leading institution of the industry, we carry out projects focused on education and employment with vocational high schools and universities. In addition, innovation, we support the renewable energy, research, and R&D projects of student communities in Turkey's elite universities.

We are also working with non-governmental organizations in the field of health. We regulary organize seminars to inform our employees in topics like blood donation, harms of smoking and similar health-related issues. We wholeheartedly support projects carried out in the field of health at every opportunity.
While contributing to the national economy and employment with our investments, we strive to achieve a vision that tries to be a pioneer and an example to the society with our sponsorship and social responsibility projects and the voluntary support of our employees. We prioritize projects that generate permanent benefits to create sustainable effects with our social responsibility efforts.

WE USE THE RESOURCES WE HAVE MORE EFFICIENTLY AND TAKE CARE TO PROIDE THE MOST EFFECTIVE RECYCLING WITHIN OUR COMPANY. **WE ADOPT TO ACT WITH CARE AND SEE IT AS A REFLECTION OF OUR RESPECT FOR THE ENVIRONMENT, HUMANITY, FUTURE GENERATIONS, AND OURSELVES.**


High Performance, Longlived Products.
QUALITY ECONOMIC SOLUTIONS

SMART SOLUTIONS **SEAMLESS** SYSTEMS

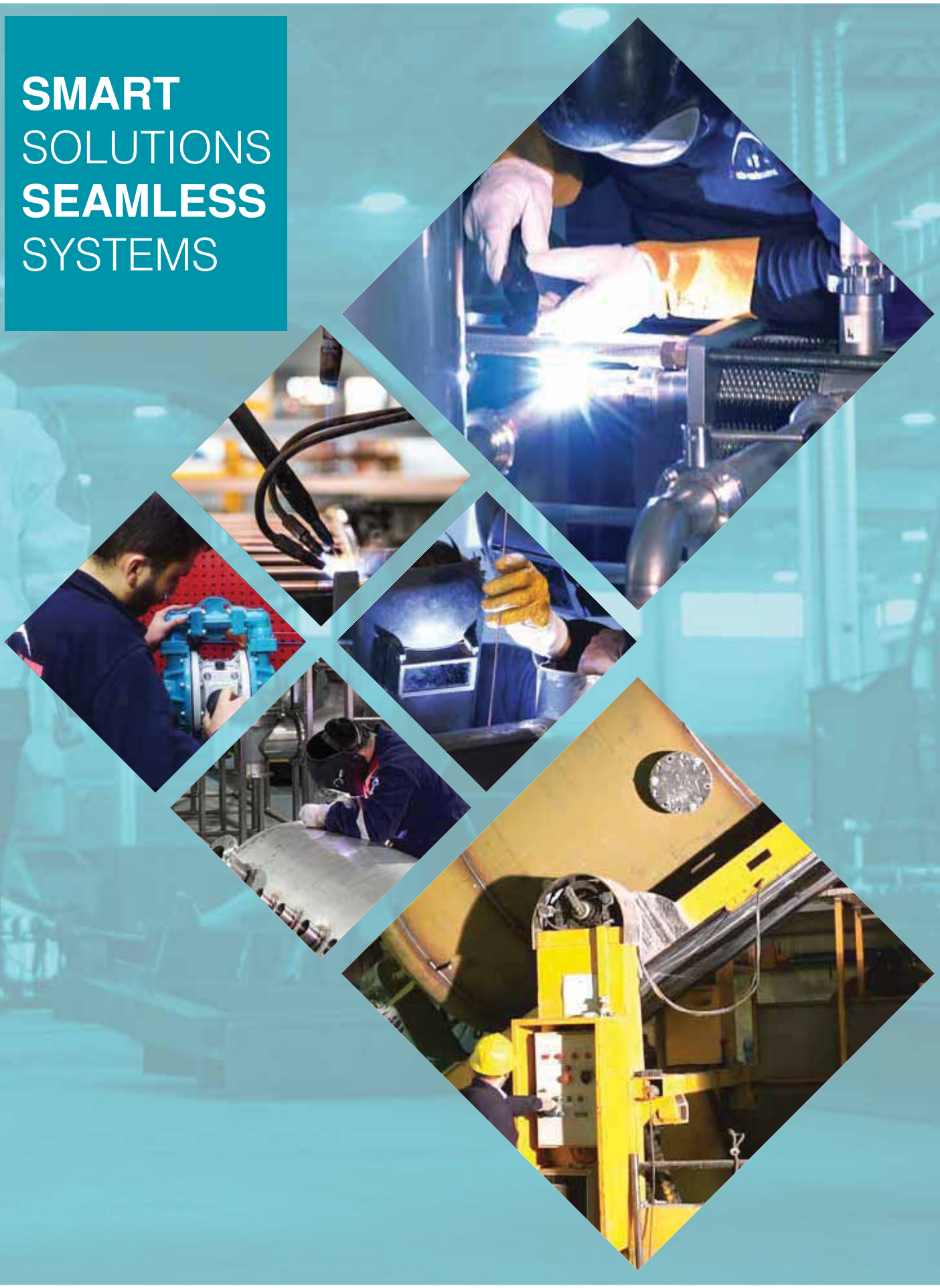

KNOWLEDGE, EXPERIENCE, SATISFIED CUSTOMER.

FAST SHIPPING, HIGH QUALITY, AFTER SALES SUPPORT!

As Ekin Endüstriyel, we aim to provide the highest quality and fastest service to our clients with the mobile service network we have created within our own structure, which has an understanding that aims at **"Customer Satisfaction"**.

Real Quality, High Performance, Environmentally Friendly and MIT Blowers That Can Be Used at High Temperatures.

DOMESTIC PRODUCTION QUALITY ECONOMIC SOLUTIONS

We continue to produce solutions with designs suitable for the process and specific to your demand.

HISTORY

2005

As Ekin Endüstriyel family, we started our business in Istanbul in 2005. We continue to work tirelessly to make the MIT brand known and exemplary all over the world, with our expert personnel and wide product variety ranging from heat transfer products, industrial systems, food systems, fluid transfer products to energy systems.

2006

The first production of heat exchanger technology, which is an indispensable part of our lives and countless industries, was carried out by Ekin Endüstriyel in Turkey.

2007

In addition to the plate heat exchangers made in Turkey, the production of pressure vessels was started. Aiming to expand its product range with specific products, all of which are produced in Turkey, one of the most concrete indicators of Ekin Endüstriyel's determination in this regard is its MIT storage tanks and MIT boilers.

2008

Tube heat exchangers took their place in our product range. Products are determined and designed according to customer needs. Ekin Endüstriyel designs the heat exchangers it manufactures on licensed computer programs.

2009

In order to determine the most suitable solutions for our customers' needs, our sales engineers started to offer solutions using the heat exchanger selection program.

2010

Expansion tanks took their place in our product range.
Expansion tanks are plumbing equipment that provides pressure control and water support in plumbing systems.

2011

Brazed plate heat exchangers started to be produced under the roof of Ekin Endüstriyel. MIT brazed plate heat exchangers were designed for cooling, ventilation and heating processes.

2012

MIT branded products have reached 60 countries.

2013

Ekin moved its headquarters to a new location in Des industrial site to continue operations.

2014

Foundation of our Kırklareli factory was laid to meet our manufacturing area requirements.

2015

Fluid transfer products were introduced at Ekin to serve our customers.

2016

After getting foundations laid in 2014, our factory in Kırklareli started production in 2016.

2017

We started providing services in various engineering fields to meet our customers' expectations with package system solutions.

2018

MIT Cooling Towers, Chillers and Steam Generators were included in our product range.
Regional directorates started operations in 4 different countries.

2019

We added MIT boilers and Innsun solar energy systems to our product range.

2020

We added the Truevalve valve group to our product range.

Quality and Dependability That You Deserve!

EKİN ENDÜSTRİYEL

HEAT TRANSFER PRODUCTS

PLATE HEAT EXCHANGERS

MIT Plate Heat Exchangers

MIT, one of the most known and preferred brands of Turkey, has been continuing creating new ideas and developments to improve plate heat exchanger sector.

Ekin aims to develop its product range and the most concrete proof of this determination is MIT plate heat exchangers.

Working Principle of MIT Plate Heat Exchangers

Plate heat exchangers are devices that operate according to the principle of heat transfer between two different fluids with temperature difference. Heating fluid and the fluid to be heated are completely separated by plates.

The standard plate heat exchangers have a total of four inlet-outlet ports, two of which are the inlet and outlet of the heating fluid and the other two of the fluid to be heated. It is also possible to produce heat exchangers with more than one heater or heating fluid with customized production.

Components

MIT plate heat exchangers are generally;

- Front body with input-output connections and information,
- Upper and lower carrying bar used to secure the plates,
- The first plate that prevents the liquid from contacting with the body,
- Flow plates that allow the passage of fluids and heat transfer,
- Completely closed end plate, which prevents fluid from coming into contact with the rear body,
- Rear body that can move on the bar,
- It consists of studs and knots, which ensure that the plates are kept at a certain size.

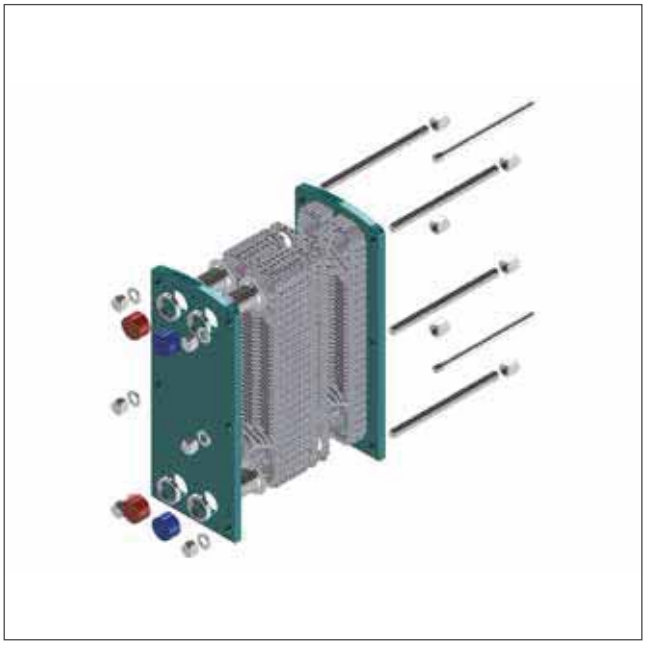

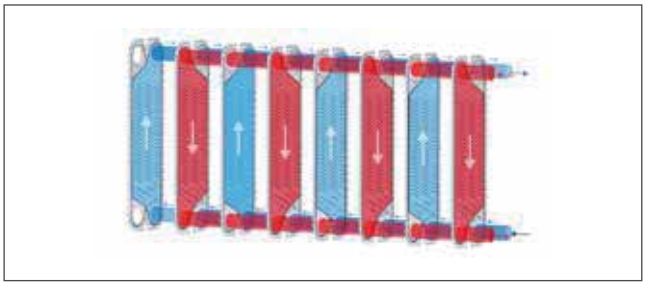

The label on the front body specifies the information of;

- Model information,
- Production number,
- Capacity information
- Maximum and minimum working temperature,
- Test and operation pressure,
- Minimum tightening size,
- Ekin contact information is available.

MIT Plate Heat Exchangers Models

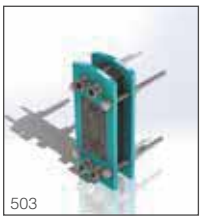
503

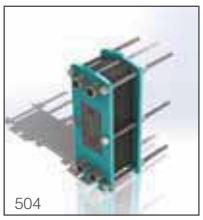
504


508-509

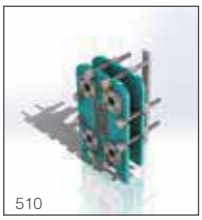
510


513-514-B

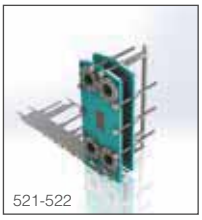
521-522

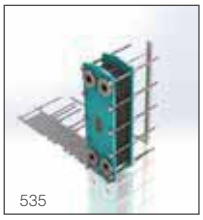
535

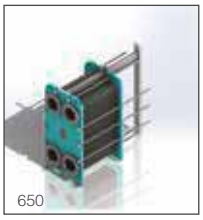
650

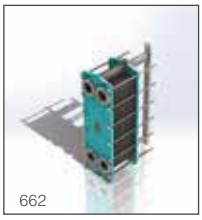
662

Model	503	504	704	505	708	707	508	509	513
Width (mm)	167,5	200	200	184	200	283	292	292	350
Height (mm)	397	490	490	478	748	596	782	782	942
Distance Between Connections (Horizantal mm)	50	72	70	59,5	70	126	100	100	140
Distance Between Connections (Vertical mm)	298	383	381	357	381	394	546	546	640
Max. Operating Pressure (bar)	25	25	25	25	25	25	25	25	25
Max. Test Operating Pressure (bar)	37,5	37,5	37,5	37,5	37,5	37,5	37,5	37,5	37,5
Connection Diameter	1" Threaded	1 1/4" Threaded	1 1/4" Threaded	1 1/4" Threaded	1 1/4" Threaded	2" Threaded / DN50 Flanged	2" Threaded / DN50 Flanged	2" Threaded / DN50 Flanged	2" Threaded/ DN50 Flanged

Model	514	713	523	510	517	520	535	521	522
Width (mm)	350	350	327	425	340	436,5	465	470	470
Height (mm)	942	942	1292	704	1070	980	1445	1090	1090
Distance Between Connections (Horizantal mm)	140	140	140	203	150	190	238	223,5	223,5
Distance Between Connections (Vertical mm)	640	640	1036	380	800	608	1070	718	718
Max. Operating Pressure (bar)	25	25	25	25	25	25	25	25	25
Max.Test Operating Pressure (bar)	37,5	37,5	37,5	37,5	37,5	37,5	37,5	37,5	37,5
Connection Diameter	2" Threaded/ DN50 Flanged	2" Threaded / DN50 Flanged	2" Threaded / DN50 Flanged	2 1/2" Threaded/ DN65 Flanged	2 1/2" Threaded / DN65 Flanged	DN80 Flanged	DN80 Flanged	DN100 Flanged	DN100 Flanged

Model	547	741	662	762	650	765	685	6125	6180
Width (mm)	491	608	608	608	765	750	780	920	1190
Height (mm)	1775	1450	1830	1830	1485	1700	2100	2895	2920
Distance Between Connections (Horizantal mm)	222,5	296	297	296	366	395	353	439	596
Distance Between Connections (Vertical mm)	1338	890	1292	1292	935	1091	1478	1939	1842
Max. Operating Pressure (bar)	25	25	25	25	25	25	25	25	25
Max. Test Operating Pressure (bar)	37,5	37,5	37,5	37,5	37,5	37,5	37,5	37,5	37,5
Connection Diameter	DN100 Flanged	DN150 Flanged	DN150 Flanged	DN150 Flanged	DN200 Flanged	DN200 Flanged	DN200 Flanged	DN250 Flanged	DN300 Flanged

Materials	
Plate Material	AISI 316, Titanium, Hastelloy
Connection Material	Carbon Steel, Stainless Steel, Plastic
Body Material	Carbon Steel, Stainless Steel
Gasket Material	EPDM, EPDM-HT, NBR, NBR-HT, H-NBR, VITON-A, VITON-G

HVAC - Heating, Cooling and Ventilation

Usage Areas

Domestic Hot Water

Domestic hot water in industry and housing is a must for comfort. With MIT plate heat exchangers, your domestic water can be produced centrally or individually. Compared to old systems, it is more hygienic, more efficient, longer lasting, more economical and more compact. With this system, your system can achieve its old performance with minor revisions, instead of replacing the system in case of problems such as residual calcification and excess chlorine-induced deformation.

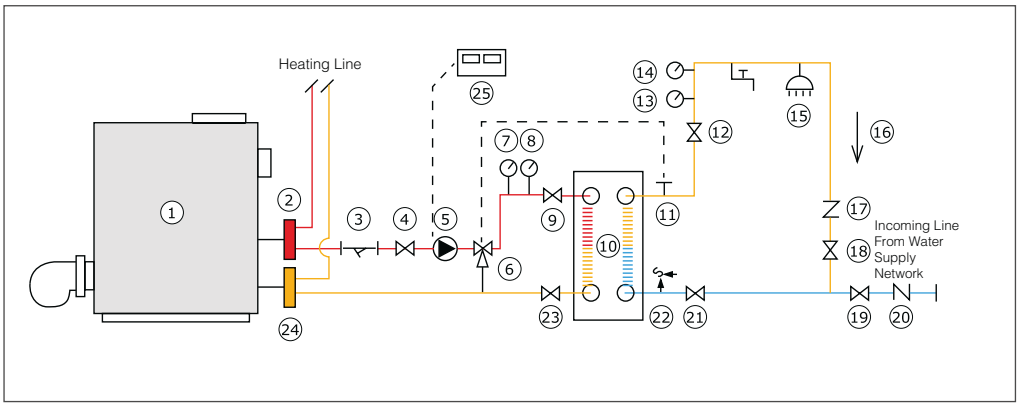

1	Boiler	6	Threeway rational valve	11	Temperature Sensor	16	Recirculation	21	Valve
2	Line Collector	7	Thermometer	12	Valve	17	Check Valve	22	Safety Valve
3	Dirt Holder	8	Manometer	13	Thermometer	18	Valve	23	Valve
4	Valve	9	Valve	14	Manometer	19	Valve	24	Returning Collector
5	Pump	10	Heat Exchanger	15	Usage Area	20	Check Valve	25	Control Panel

Radiator Heating

By using hot water from sources such as regional heat centers, geothermal resources and electricity generation facilities; a region, a district, even a complete province can be heated. With the MIT plate heat exchangers specially designed according to the type of the source, the zone can be separated into zones and placed under each building and hot water can be produced according to the needs of the buildings.

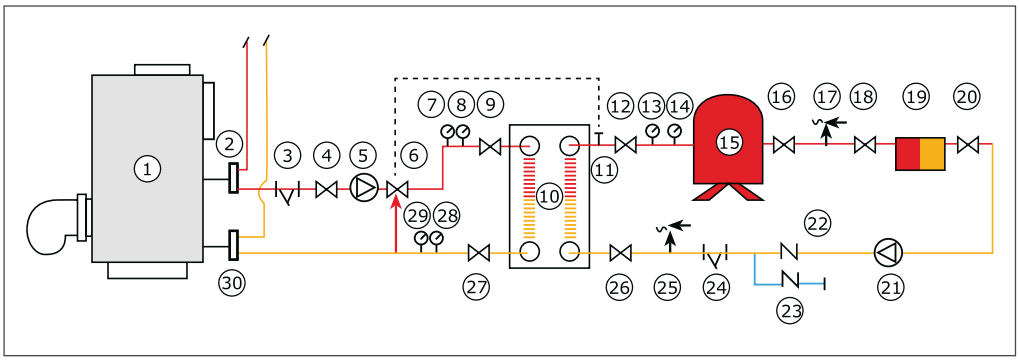

1	Boiler	7	Thermometer	13	Thermometer	19	Radiator	25	Safety Valve
2	Line Collectors	8	Manometer	14	Manometer	20	Radiator Valve	26	Valve
3	Dirt Holder	9	Valve	15	Expansion Tank	21	Circulation Pump	27	Valve
4	Valve	10	Heat Exchanger	16	Valve	22	Check Valve	28	Thermometer
5	Circulation Pump	11	Temperature Sensor	17	Safety Valve	23	Check Valve	29	Manometre
6	Threeway Valve	12	Valve	18	Radiator Valve	24	Dirt Holder	30	Returning Collector

Floor Heating Systems

The MIT plate heat exchangers, which are used to prevent the heating source from being affected by corrosion in underfloor heating systems, which are frequently used in areas where more heating comfort is desired recently, serves as a protective wall between the heated area and the heating source. Thanks to its high corrosion resistance, carbon steel body, stainless steel plate and special designs, MIT plate heat exchangers guarantee years of trouble-free operation.

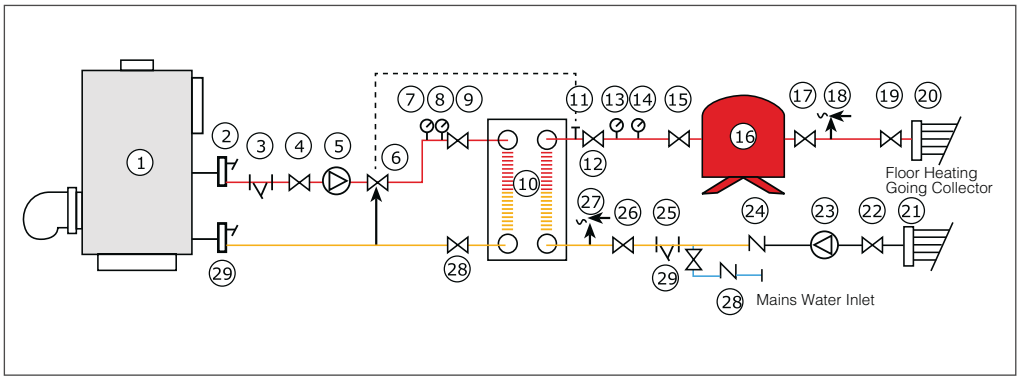

1	Boiler	7	Thermometer	13	Thermometer	19	Valve	25	Dirt Holder
2	Line Collectors	8	Manometer	14	Monometer	20	Floor Heating Going Collector	26	Valve
3	Dirt Holder	9	Valve	15	Valve	21	Floor Heating Returning Collector	27	Safety Valve
4	Valve	10	Heat Exchanger	16	Expansion Tank	22	Valve	28	Valve
5	Circulation Pump	11	Temperature Sensor	17	Valve	23	Circulation Pump	29	Returning Collector
6	Threeway Valve	12	Valve	18	Safety Valve	24	Check Valve		

Pressure Breaker

In high-rise buildings, severe pressures arise from the height of the system. Sending this pressure from the system to the bottom of the heating-cooling system causes the system to overload and fatigue. In addition, the initial investment cost is very high since the installation is to be installed with high pressure armatures. In these systems, MIT plate heat exchangers which are resistant to high pressure to be placed between the boiler room or the cooler group and the installation meet the pressure coming from the system and ensure the boiler-cooling system in the primary circuit to operate at low pressures.

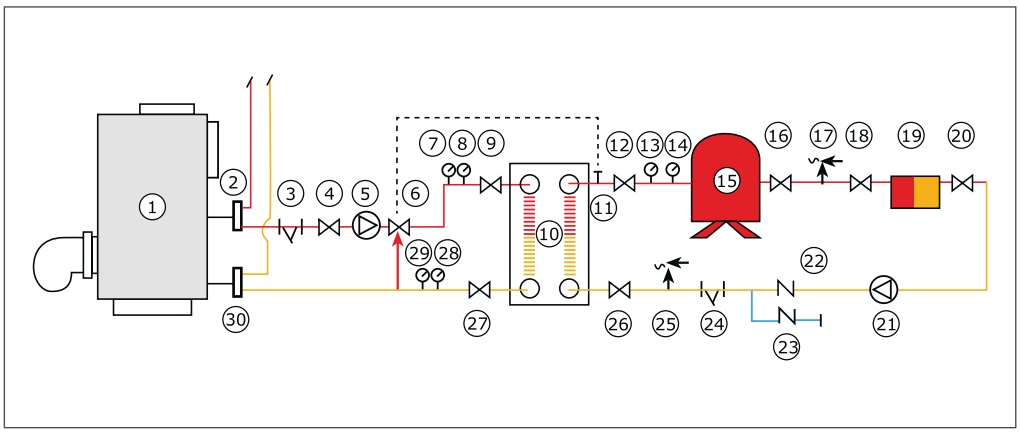

1	Boiler	7	Thermometer	13	Thermometer	19	Radiator	25	Safety Valve
2	Line Collectors	8	Manometer	14	Monometer	20	Radiator Valve	26	Valve
3	Dirt Holder	9	Valve	15	Expansion Tank	21	Circulation Pump	27	Valve
4	Valve	10	Heat Exchanger	16	Valve	22	Check Valve	28	Thermometer
5	Circulation Pump	11	Temperature Sensor	17	Safety Valve	23	Check Valve	29	Manometre
6	Threeway Valve	12	Valve	18	Radiator Valve	24	Dirt Holder	30	Returning Collector

Swimming Pool Heating

All the pools must be between certain temperatures, whether for swimming pool or health. MIT plate heat exchangers are used with the help of simple automation to keep the pools between the desired temperatures. Due to their compact design, the MIT plate heat exchangers cover very little space in the engine room of your pool, allowing you to keep the pool at the desired temperature.

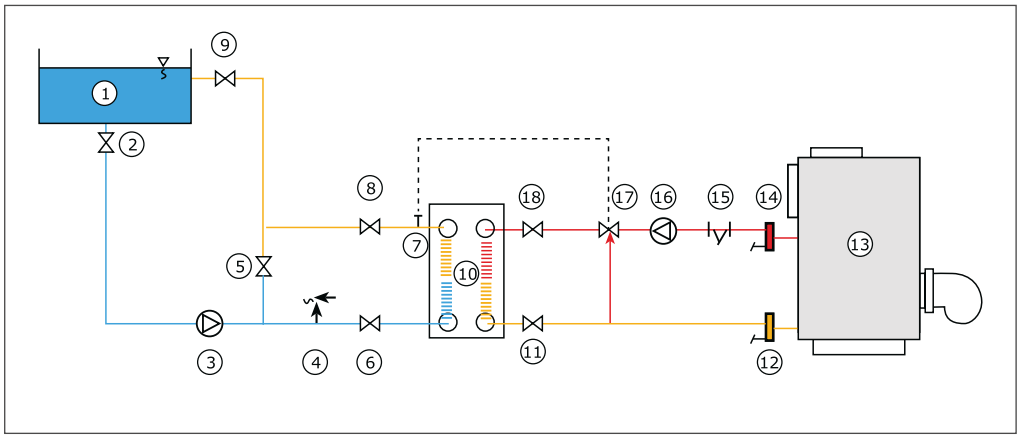

1	Pool	5	Valve	9	Valve	13	Boiler	17	Threeway Valve
2	Valve	6	Valve	10	Heat Exchanger	14	Line Collector	18	Valve
3	Pool Circulation Pump	7	Temperature Sensor	11	Valve	15	Dirt Holder		
4	Safety Valve	8	Valve	12	Returning Collector	16	Boiler Circulation Pump		

Central Heating Systems

As a part of new laws in our country, central systems are encouraged and it has been becoming mandatory in some situations. The main cause oft his is that central system is more efficent compared to individual use and consumes less energy. MIT Plate Heat Exchangers are able to produce hot water for heating of residental areas and for utility purposes.

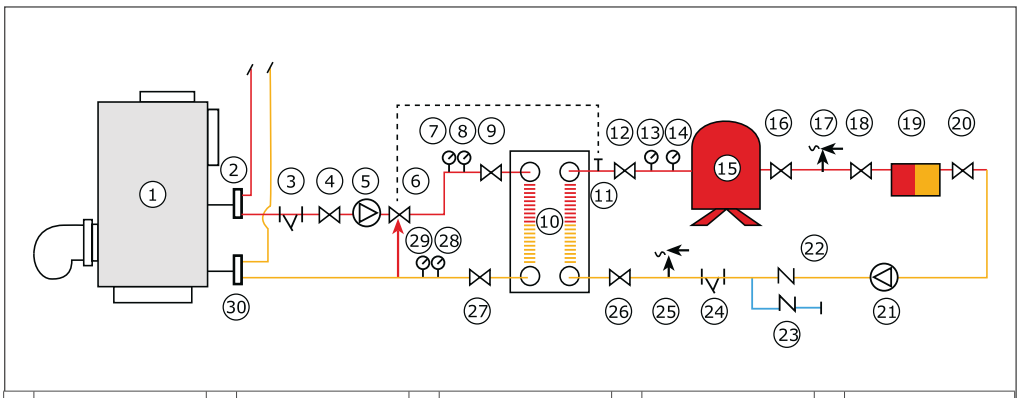

1	Boiler	7	Thermometer	13	Thermometer	19	Radiator	25	Safety Valve
2	Line Collectors	8	Manometer	14	Manometer	20	Radiator Valve	26	Valve
3	Dirt Holder	9	Valve	15	Expansion Tank	21	Circulation Pump	27	Valve
4	Valve	10	Heat Exchanger	16	Valve	22	Check Valve	28	Thermometer
5	Circulation Pump	11	Temperature Sensor	17	Safety Valve	23	Check Valve	29	Manometre
6	Threeway Valve	12	Valve	18	Radiator Valve	24	Dirt Holder	30	Returning Collector

Energy

Geothermal Heating Systems

Turkey is rich in geothermal resources and after the recent energy crisis, Turkey has accelerated its investments in this field. MIT plate heat exchangers, which are used in both domestic heating and domestic water production, proved their success in the sector and became one of the most preferred brands in this regard.

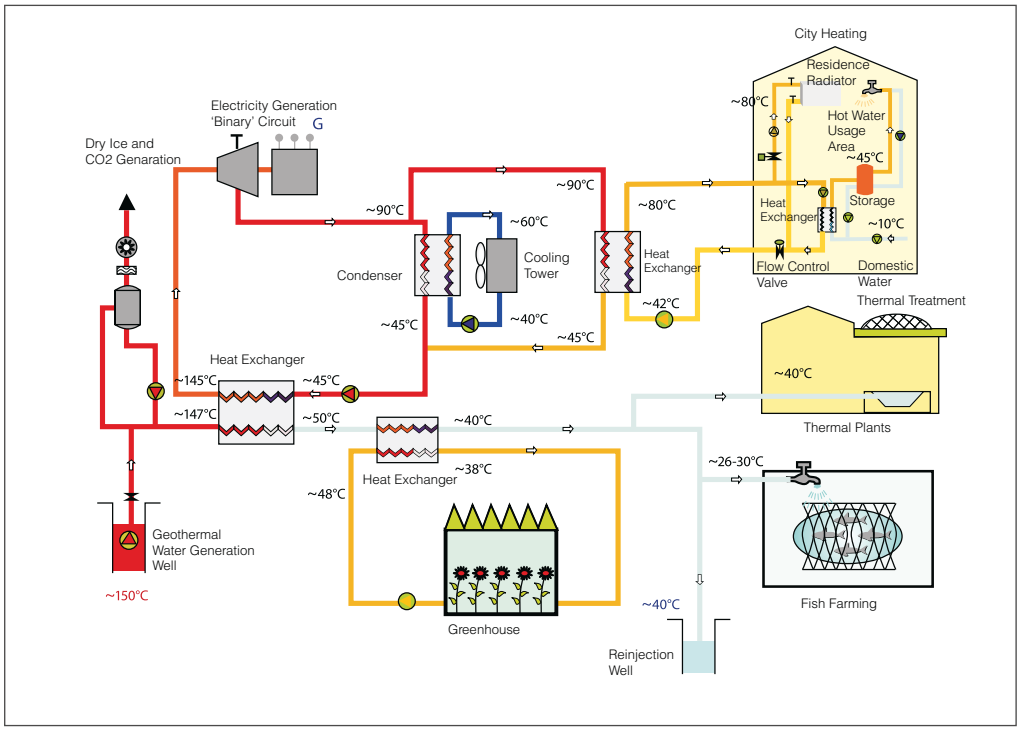

Heat Recovery Systems

In today's conditions, where energy is getting more expensive day by day, there is no need to waste energy in industry or individual use. The budgets allocated to energy in industrial establishments have increased by 20% -40% in recent years and they are at the top of the expenses section. Taking all these points into account, the recovery of energy has become very important. MIT plate heat exchangers prevent the waste of your thermal energy with wide variety of plate and gaskets suitable for each system.

Power Generation Plants

Thermal power plants are places where electricity is produced, as well as very large sources of hot water. Extra systems for cooling the hot water that is generated in these systems are installed and a lot of money is spent. At this point, MIT plate heat exchangers are activated and they provide free cooling of water in these systems as well as providing a complete heating of the area with the heat energy taken from it.

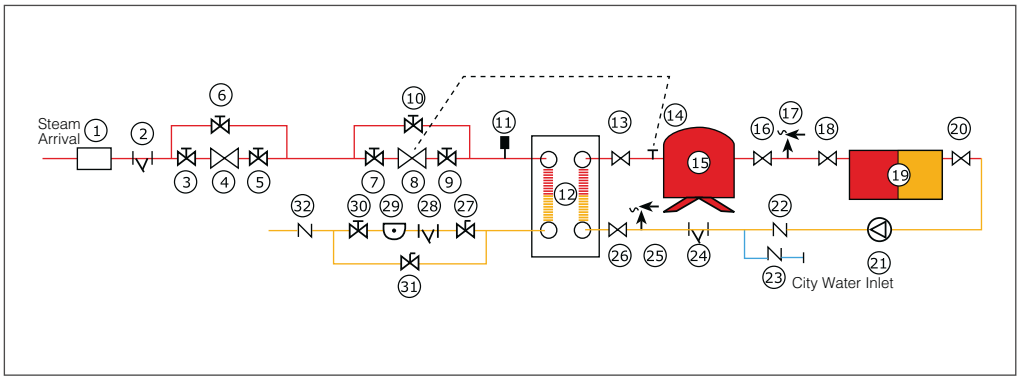

1	Seperator	7	Valve	13	Valve	19	Radiator	25	Safety Valve
2	Dirt Holder	8	Thermostatic Valve	14	Temperature Sensor	20	Valve	26	Valve
3	Valve	9	Valve	15	Expansion Tank	21	Circulation Pump	27	Valve
4	Pressure Reducer	10	Valve	16	Valve	22	Check Valve	28	Dirt Holder
5	Valve	11	Vacuum Breaker	17	Safety Valve	23	Check Valve	29	Steam Trap
6	Valve	12	Heat Exchange	18	Valve	24	Dirt Holder	30	Valve

Solar Energy Systems

When it comes to alternative energy, the first thing that comes to mind is solar energy systems. In these systems, which provide free energy for domestic hot water supply and residential heating, MIT plate heat exchangers, which are used as instant water heater, provide more efficient and safer operation of the system and thus prolong the life of the system.

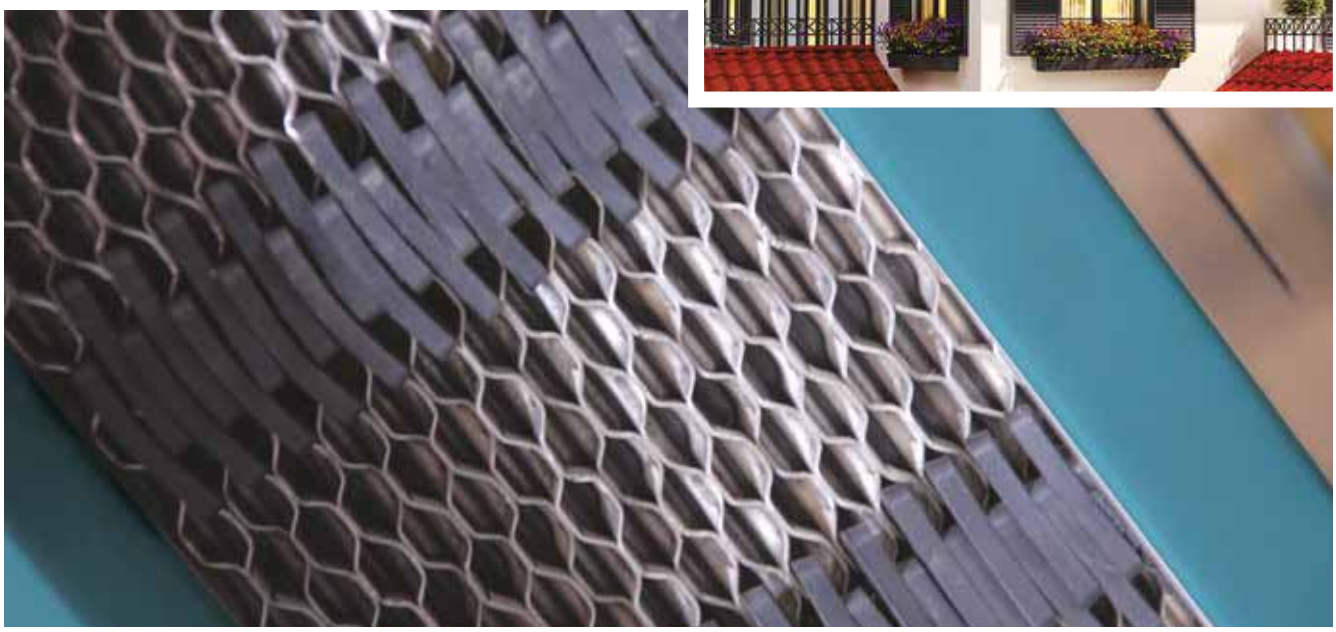

Industry

Cooling of Rolling Oil

The oil used in the rolling mills becomes hot as a result of the process and the lubricating properties are reduced; as a result, operating performance isreduced. MIT plate heat exchangers are used to keep the rolling oil at optimum temperature. With the cooling tower and the chiller circuit connected to the secondary circuit of the heat exchanger, and a simple automation, your rolling oil remains constant at the desired temperatures and your plant operates at maximum performance.

Boron Oil Cooling

Boron oil, one of the cornerstones of industry, is the lifeblood especially for metal cutting. The quality and temperature of the boron oil are very important for maximum efficiency and maximum life from the cutting edge. In order to keep the boron oil at optimum temperature, the cooling tower or chiller used with MIT plate heat exchangers provides maximum efficiency.

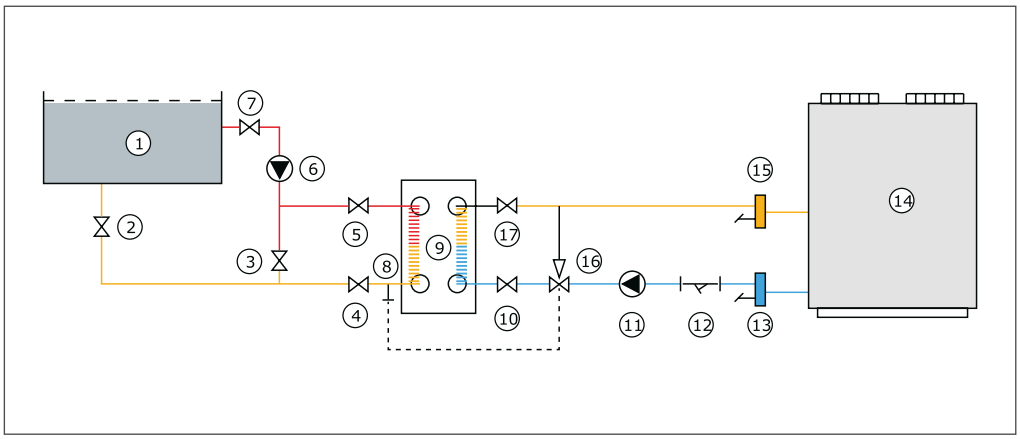

1	Oil Tank	5	Valve	9	Heat Exchanger	13	Going Collector	17	Valve
2	Valve	6	Oil Circulation Pump	10	Valve	14	Cooling Tower		
3	Valve	7	Valve	11	Circulation Pump	15	Returning Collector		
4	Valve	8	Oil Tank	12	Dirt Holder	16	Threeway Rational Valve		

Chiller Group Circuit

The cooling tower is generally insufficient for applications where low temperature water is desired. Therefore, chillers are preferred in these applications. Chiller groups are generally very sensitive, expensive and difficult to repair. Therefore, in case of any negative situation that may arise from the installation, large damages can occur. The MIT plate heat exchangers separate the system from the chiller circuit, allowing the two systems to operate independently of each other, as well as the heat transfer between them.

Cooling Group Circuit

Nowadays, cooling towers are the most commonly used cooling source to meet the cooling needs of industrial plants. MIT plate heat exchangers are used in both types of these open and closed towers. Since some solid particles from the medium are mixed into the water in the open towers, the water where these particles are located cannot be sent. Directly to the system to be cooled. Using the MIT plate heat exchanger between the system to be cooled and the open tower, the two systems are separated as two separate circuits and the MIT plate heat exchangers collect all the risks on themselves. In case of contamination over time, only the heat exchanger can be cleaned and the system will perform the same performance again.

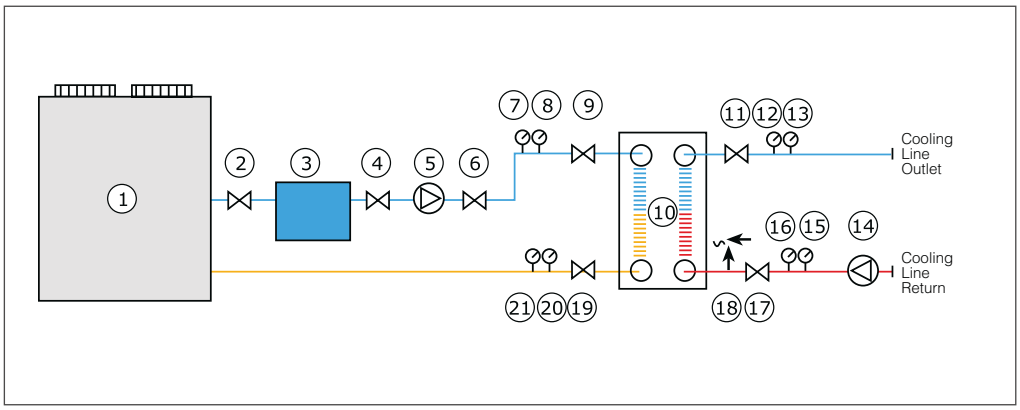

1	Cooling Group	6	Valve	11	Valve	16	Manometer	21	Manometer
2	Valve	7	Thermometer	12	Thermometer	17	Valve		
3	Tank	8	Manometer	13	Manometer	18	Safety Valve		
4	Valve	9	Valve	14	Circulation Pump	19	Valve		
5	Circulation Pump	10	Heat Exchanger	15	Thermometer	20	Thermometer		

Waste Heat Recovery

Industrial facilities have many wasted heat sources such as rotten steam and hot water returning from fabric washing. At the same time, there are applications that require heat, such as domestic hot water production and office heating. With the MIT plate heat exchanger you will use to transfer heat from existing heat sources to the part that needs heat, you do not waste your heat and you need to save extra heat for the heat requirement. Nowadays, the most important factor that will relax businesses is to reduce costs. Energy expenses, one of the biggest factor in expenses, are now worth the gold for everyone and cannot be ignored. A heat exchanger to be used for heat recovery with a rough calculation now pays off in 3-6 months and starts to add value to the operation in a short time.

Stainless Steel Heat Exchangers

The difference of food plate heat exchangers from other heat exchangers is their hygienic nature in terms of their bodies and all surfaces in contact with food are produced as stainless. In addition, the gaskets have FDA (food conformity) certificate.

Usage Areas

- Milk Heating and Cooling
- Pasteurisers
- Juice Pasteurisers
- Cream Cooling
- Brine Heating and Cooling
- Whey Processing

Cooling Systems in Ships

Engine cooling systems are divided into two. Direct and two-circuit (indirect) and indirect, two-circuit (indirect) cooling. Direct cooling is smooth and suitable for engines designed as marine engines. Cylinder blocks and other water-circulating equipment are protected by seawater-resistant alloys and anchors. Most outboard marine engines and small powered internal engines are built in this way. A motor driven marine seawater pump absorbs water and circulates it in the engine and provides cooling. In normal use, the engine does not reach the ideal operating temperature required and runs cold, since this pump is sized to provide adequate cooling even when the motor is most stressed. For this reason, a by-pass line and thermostat have been developed to regulate the flow of water sent to the engine and to provide sufficient heating of the engine.

In two-circuit cooling systems, the fresh water circulates inside the engine (just like in motor vehicles or stationary industrial engines). Thus, the internal parts of the engine are protected from the effects of sea water.

The seawater pump (which can also feed the exhaust system and sleeve bearings to the water at the same time.) Sends sea water to a MIT plate heat exchanger. The warmed fresh water from the engine is circulated in the plates inside the MIT plate heat exchanger.

Central Heating Systems

In the central cooling systems, the fresh water circulation line on the secondary side is cooled using sea water. The cold water in this cooled fresh water circulation line acts as a refrigerant for the heat exchangers in cooling systems such as engine cooling, jacket water cooling. The use of fresh water in the secondary circuit reduces the corrosion and wear of the circuit elements in the machine lines and minimizes the backup and maintenance costs. MIT plate heat exchangers make your system safer and last longer.

With the MIT plate heat exchangers offering the most suitable solutions for all capacities, your initial investment costs are kept to a minimum. In our heat exchangers, which are fully compatible with all systems with different plate angles and types, stainless steel and titanium plates are offered as standard and they can use different plate materials to suit your needs. In maritime sector, standard bodies can be used as well as complete aluminum and aluminum alloy light bodies which are specially designed for the sector can be used when weight is important. The most important problem of the maritime sector is the highly corrosive effect of seawater.

MIT plate heat exchangers are always on your side to solve this problem with complete titanium and titanium alloy 316 plates. MIT plate heat exchangers are the only solution point of the sector with plate, gasket and body types suitable for every process that may be needed on a ship.

Other cooling applications on board;

- Main Motor Cooling
- Lubricating Lubricating Oil
- Camshaft Cooling
- Fuel Oil Heating
- Water Distillation Cooler

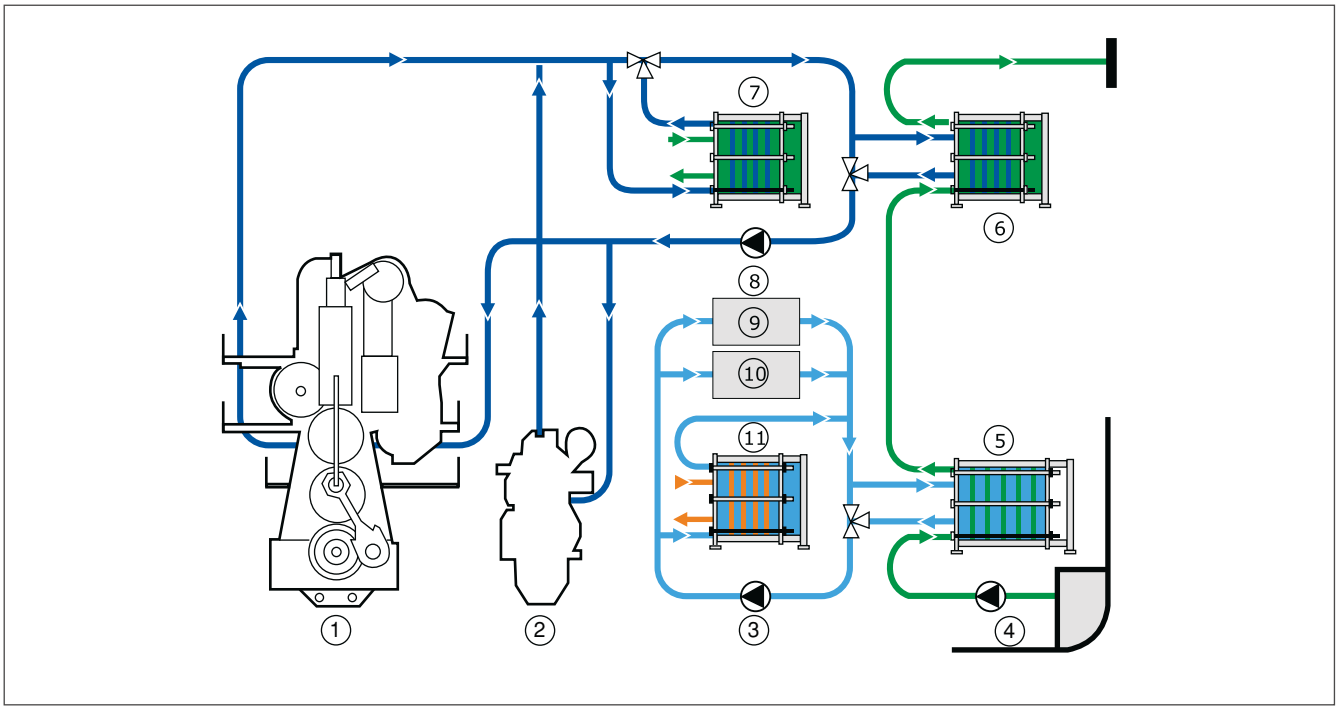

1	Main Engine	4	Sea Water Pumps	7	Preheater For Sea Water Desalination	10	Charge Air Cooler M.E.
2	Aux. Engine	5	LT - Central Coolers	8	HT - Fresh Water Pumps	11	Lube oil cooler M.E.
3	LT - Fresh Water Pumps	6	HT - Central Coolers	9	Auxiliaries		

MIT Plate Heat Exchanger Technology

The MIT plate heat exchangers, which are the rising value of the plate heat exchanger market, always receive their real power from the design team that supports them. Ekin, which proves that there are still innovations to be made in the plate heat exchanger market where all the technologies become commonplace, will continue to be on the way with new works with its design team day by day.

Components

1. Carrying bar
2. Rods
3. Connection ports
4. Front body
5. Bolts, Nuts and Washers
6. Plates
7. Rear body

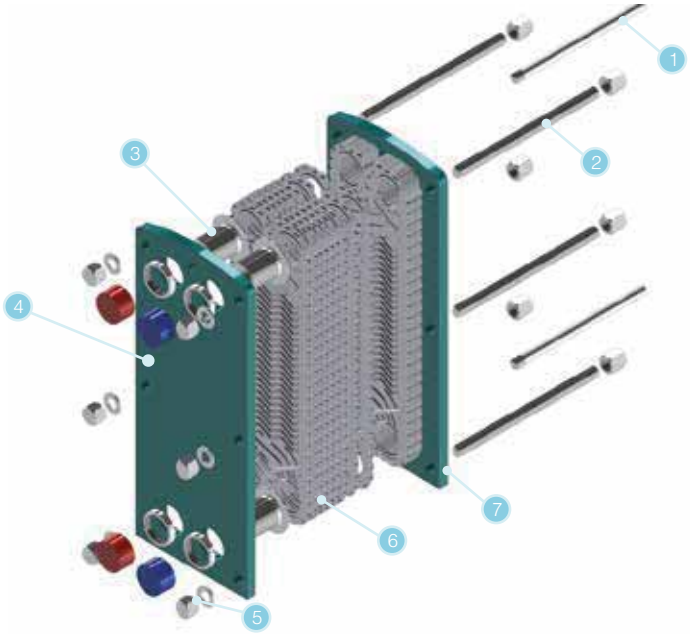

Easy Repair & Maintenance

- Safety Stamp
- Counter Flanges
- Stud Channels
- Fixing Feet

Compliance and Quality

- Test Tag on Body
- CE Label on Body
- Capacity

Hygienic Applications

- Complete Stainless Body
- Rubber Mouth That Wraps The Body
- Seals

Longer Service Life

- EPDM, EPDM-HT, NBR, H-NBR, VITON, VITON-G Gaskets
- AISI 304, AISI 316, Titanium, Hastelloy Plates

Types of Plates MIT Plate Heat Exchangers

Standard Plates

Standart MIT plates are used in applications such as hot water supply, low pressure steam applications and space heating.

Special distribution channels, can be designed according to the needs of wide and narrow angle types, minimum pressure losses with the maximum efficiency of the special plate depth provides the right solution in such applications.

Wide Range Plates

In some embodiments, solid particles may be present in the fluid passing through the heat exchanger. For these applications, the wide range of plates are specially designed by the MIT team and the particles contained in the fluid can continue without sticking to the channels inside the heat exchanger and the contamination within the exchanger can be kept at minimum levels.

These plates, which are designed with wide gap, are also thicker than standard plates. In this way, the resistance to corrosive agents that are likely to be present in the flow is increasing. It is especially used in the textile industry to ensure optimum efficiency in waste water recovery.

Semi-Welded Plates

In some applications where aggressive fluids and high temperatures are present, seal life can be very short. Therefore, in these applications, it is recommended to use MIT semi-welded plates where two plates are welded to each other by laser welding instead of using seals on the side of the aggressive fluid. In the heat exchanger, the fluid on the other side passes through the sealing surface as in standard applications. In this way, your system is safe, but the heat exchanger can be easily maintained.

Double-Protection

MIT double-protection plates ensure that the system is completely safe when the two fluids used in the process should not be mixed. In these exchangers, the two plates are connected without welding and the fluid can flow freely between these two plates

In case of any leakage, the fluid leaks through the two plates without interfering with the other fluid and can be intervened in advance. Due to its similarity to the standard heat exchangers, it can be easily removed and cleaned.

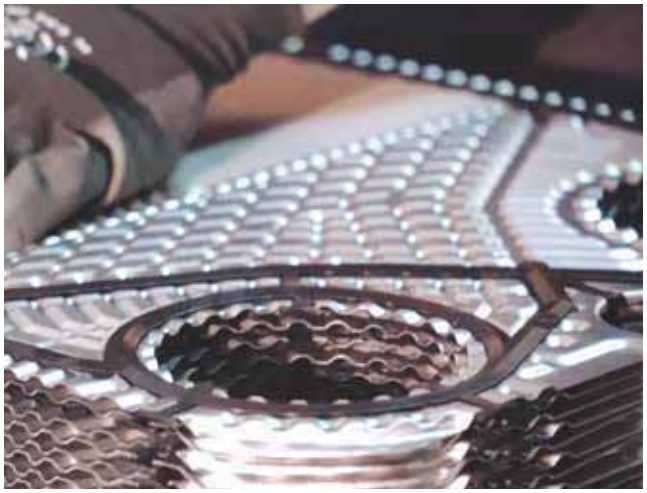

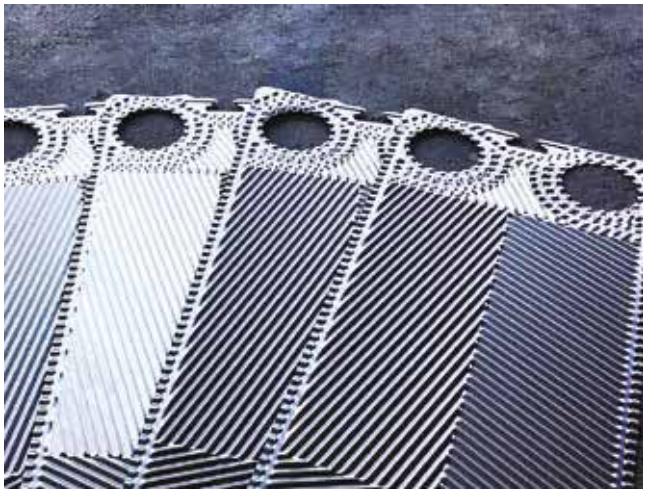

Due to the design of the heat exchanger plates, their duties are in three different ways.

Which are respectively;
- Flow Plate,
- Routing Plate,
- Cover Plate.

(A) Flow Plate

(B) Routing Plate

(C) Cover Plate

Flow Plate: It is the type of plate in which two fluids transfer heat with each other, and all four of the plate holes are open.

Routing Plate: These are the plates that direct the fluid and allow it to circulate more in the heat exchanger, thus increasing the heat transfer surface that the fluid contacts.

Cover Plate: It is the type of plate that does not transfer heat but acts as a buffer between the steel body and the heat transfer plates in the heat exchanger, and ensures that the fluids hit the outlet nozzle.

Plates are produced with H theta and L theta patterns according to their inner patterns.

H: High Theta

L: Low Theta

High theta type heat exchanger plates have high pressure loss and high heat conduction, while low theta design plates have low pressure loss and lower heat conduction.

Gasket

Gasket types are produced in three different types as EPDM, NBR and Viton. EPDM is used for water, steam and some chemical fluids. NBR gaskets are frequently used for some chemicals as well as fluid types containing oil and oil acids. Viton gaskets are mainly used in aggressive fluids as well as being used for very high temperature steam and very high temperature hot oils.

Types of gaskets used in heat exchangers are called;

- Flow Gaskets
- First Cover Plate Gaskets
- Collar Gaskets

The first plate gasket provides a transition between the body and the first plate, ensuring that the fluid is isolated from the body and makes contact with the first plate. The task of the collar gasket is to prevent the fluid from coming into contact with the body and to prevent damage to the body, preventing corrosion and prolonging the life of the body.

Gasket Type	EPDM	NBR	VİTON
Operating Temperature	-20 / 145 °C	-20 / 120 °C	-20 / 180 °C

Table: Maximum and minimum operating temperatures of gasket types

Transfer Skid and Studs

Other components of the heat exchangers are skids and studs. For heat exchangers on skids, the fixing component, which serves as a guide between the bodies and ensures that the plates are arranged parallel to each other, is called the transfer skid. It is produced from non-corrosive material especially for food applications; however in unhygienic applications, it is made out of galvanized carbon steel.

Studs are another fixing component of the heat exchanger. These components, which are produced in different thicknesses according to the pressure class of the heat exchanger, allow the plates and gaskets to absorb the internal pressure that occurs as a result of them becoming rigid. It can be made out of stainless and galvanized carbon steel as in the skids.

Why Should Be Used MIT Plate Heat Exchangers?

- It transfers heat with very high efficiency.
- Due to its compact structure, it occupies very little space.
- It can be completely disassembled and cleaned.
- Wide plate and gasket variety.
- Entirely manufactured in Turkey.
- Extensive service and dealership network.
- Launched by the main manufacturer.
- Always the most economical solution.
- It is designed by its experienced and solution-oriented engineers and offered to its customers.
- Quality certificates such as CE, ISO, EAC, TSE-HYB, BV.
- It is under Ekin guarantee for 2 years.
- It is delivered to you with the shortest delivery time.

MIT Heat Exchanger Selection Software

In the design of MIT plate heat exchangers, the MIT heat exchanger selection program developed as a result of long-term work of Ekin software team is used. With its user-friendly interface,automatic correction system, warnings for wrong selections, smart control system which prevents wrong selections; It carries the title of being the first and only software on this field in Turkey.

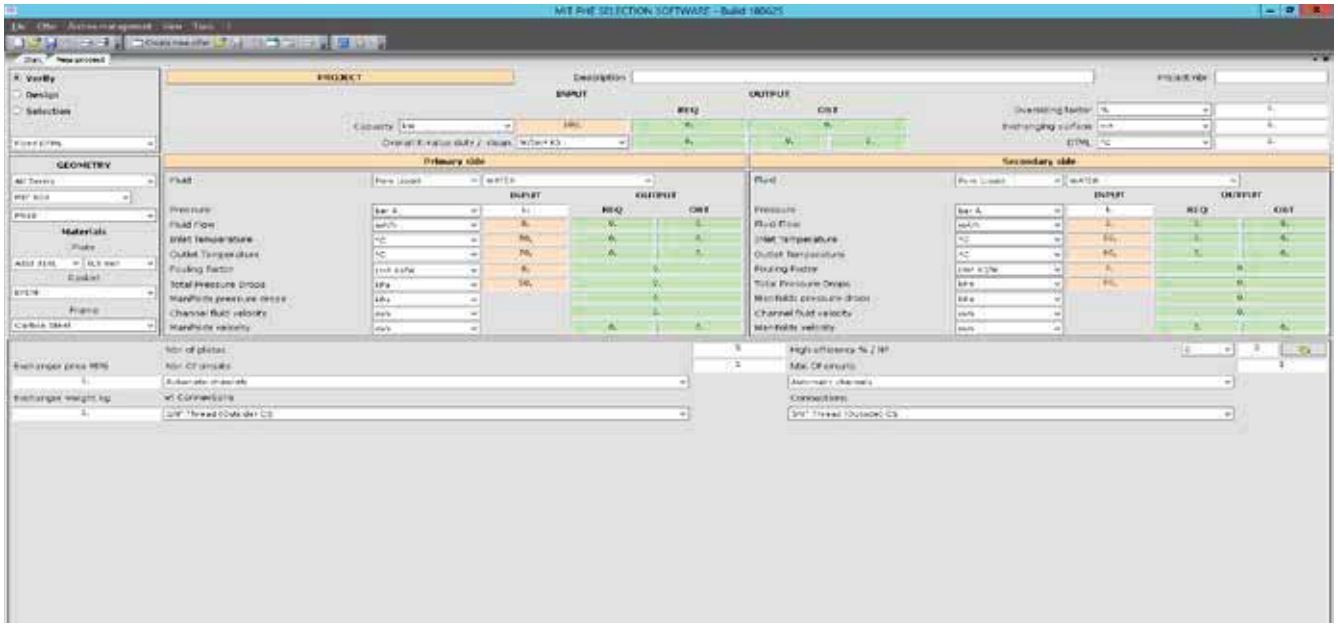

After the design of the heat exchanger with MIT heat exchanger selection program, technical detail document can be obtained in desired format (PDF, EXCEL, TIFF, TEXT). In this way many conditions, such as the conditions under which it should work, the efficiency to be taken from the heat exchanger, the pressure losses in the heat exchanger and the dimensions of the heat exchanger, are provided in advance so that the installation can be prepared in advance.

Company: - PHE Type: 522		Date: - Engineer: -	
Heat Exchanger Features			
Capacity	1000,00	kW	
Model	MIT 522		
Total Number of Plates	19		
Plate Arrangement	4H + 15L		
Heat Transfer Area	3,74	m^2	
Heat Exchanger Margin	0,35	%	
Actual k Value / Task k Value	6178 / 6199	$W/(m^2K)$	
LMTD	43,28	°C	
	Primary Circuit		**Secondary Circuit**
Fluid Type	Water		Water
Number of Transitions	1		1
Fluid Flow	44,1 m^3/h		17,3 m^3/h
Fluid Inlet Temperature	90,00 °C		10,00 °C
Fluid Outlet Temperature	70,00 °C		60,00 °C
Total Pressure Loss	41,52 kPa		10,73 kPa
Pressure Loss on Plates	39,98 kPa		10,48 kPa
Pressure Loss on Connections	1,55 kPa		0,25 kPa
Channel Fluid Speed	0,83 m/s		0,36 m/s
Connection Fluid Speed	1,561 m/s		0,613 m/s
Contamination Coefficient	0,0000003 $(m^2K)/W$		0,0000003 $(m^2K)/W$
Fluid Features	**Primary Circuit**		**Secondary Circuit**
Density	971,79 kg/m^3		994,03 kg/m^3
Specific Heat	4197 J/(kg K)		4179 J/(kg K)
Thermal Conductivity	0,670 W/(m K)		0,623 W/(m K)
Viscosity	0,3543 cP		0,7193 cP
Material			
Plate Material		0,5 mm - AISI 316L	
Gasket Material		EPDM	
Body Material		Carbon Steel	
Connections			
Primary Circuit		M1 => M2 NW100 Flange (STUDDED) CS	
Secondary Circuit		M3 => M4 NW100 Flange (STUDDED) CS	
Weight Empty / Full		239,42/257,11 kg	
Internal Volume Primary / Secondary		9/9 l	
Maximum Differential Pressure Difference		5 bar	
Design / Test Pressure		10/15 bar	
Min. / Max. Operating Temperature		-25/150 °C	
Price		-	

MIT Plate Heat Exchanger Gaskets

Ekin Endüstriyel produces gaskets for plate heat exchangers, with an experienced team and high-tech R&D laboratory since 2006. Developing its own technology, Ekin Endüstriyel focuses on producing solutions that can meet customer needs at the highest level.

Our experience allows us to design gaskets that will ensure long-lasting and high quality operation of plate heat exchangers
with its flexible production and product development methodology.

The delivery time of your gaskets is also of particular importance to us. In our production approach, customer service is more important
than saving costs.

Therefore, we stock up on raw materials and finished goods used in production. It is among our goals to reduce the operating costs of your heat exchanger.

In heat exchangers, gaskets with high quality standards should have the following features:

Process	MIT Gaskets
Custom Molded Production	✔
Special Production Formula	✔
ISO 9001 Certified Laboratory	✔
International Collaborations	✔
System Development for Special Needs	✔
12 Months Warranty For All Manufacturing Defects	✔

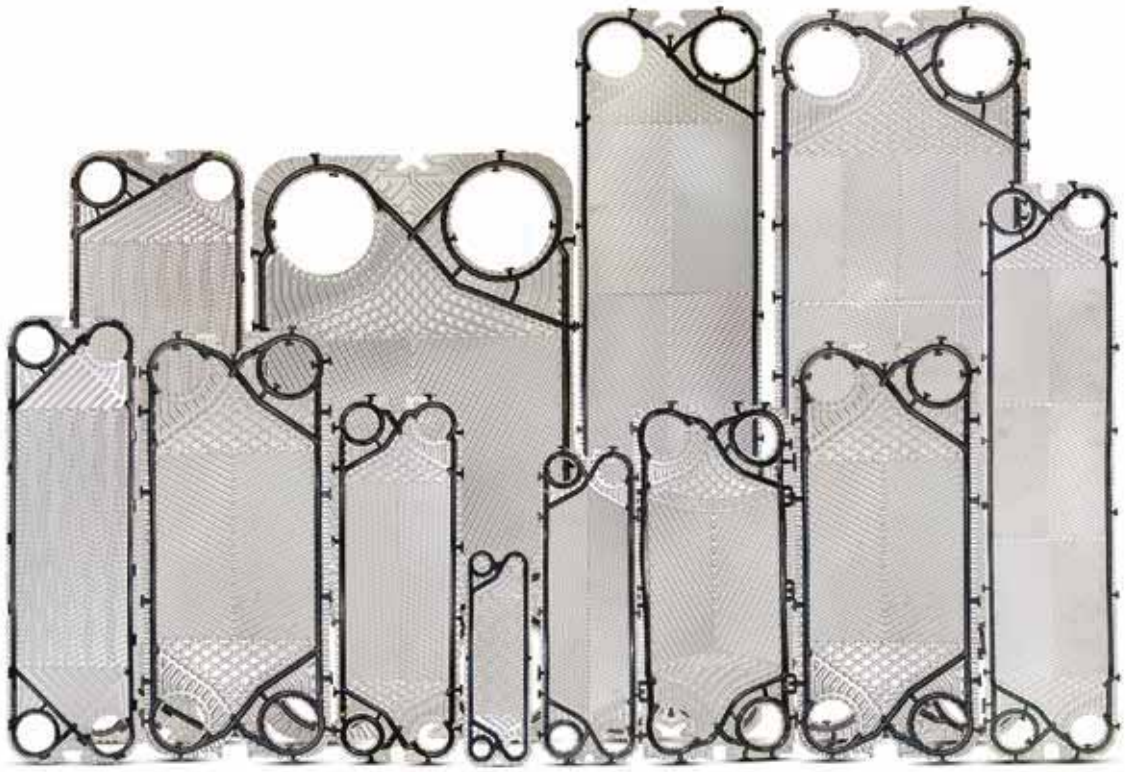

MIT Plate Heat Exchanger Gaskets

MIT gaskets offer experience and superior service for many years. Ekin Endüstriyel is the only company in Turkey that produces the most comprehensive gaskets compatible with all brands and models.

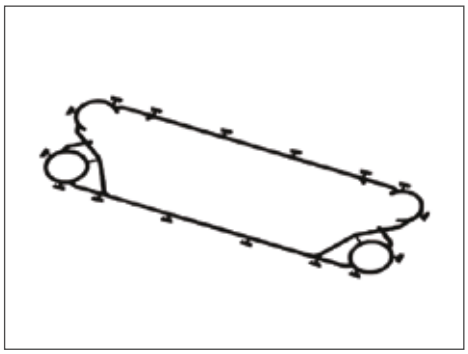

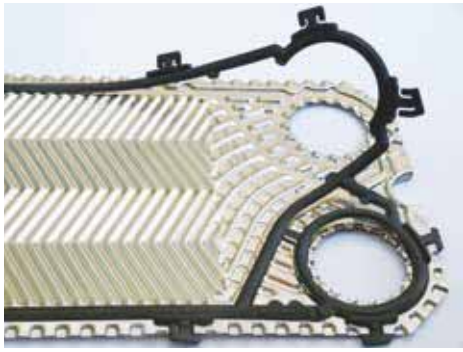

The quality of MIT gaskets is also a result of new generation production molds.

- CAD/CAM Center
- CNC Units
- Molding Device
- Turning Line
- Mold Maintenance Line

Thanks to all these possibilities, we can make a new mold which is ready for production in 30 days and we can produce gaskets for all heat exchangers in your facility.

Ekin Endüstriyel is the gasket manufacturer with the widest product range in the market. Please learn the model of your heat exchanger with the relevant details and call us.

Operating Performance and Service Life of Gaskets

Gaskets are known as replacement parts in plate heat exchangers. They have a shorter service life than metal machine parts.

Where leakage is unacceptable, changing gaskets periodically should be considered as a preventive measure.

We can list the parameters that affect the service life of the gaskets as follows.

Pressure: The higher the working pressure, the shorter the gasket life.

Pressure Difference: The greater the pressure difference between the two fluids, the shorter the gasket service life.

Fluid Temperature: The higher the temperature to which the gasket is exposed, the faster the loosening and shorter service life will be.

Fluid Aggressiveness: The aggressive nature of the fluid causes the gasket to age, swell, and deteriorate its structure.

Quality: The higher the quality of the materials used in gasket making, the longer the gasket will last.

Exposing Plate Stacks: Each exposing of the heat exchanger increases the risk of gaskets leaking. Exchangers should not be exposed frequently, and if it is necessary to expose, the places of the plates should never be changed.

Change of Operation Parameters: Fluctuations in pressure, changes in temperature, fluid type and initial operating pressure should not be changed.

When gaskets reach the end of their working life, they often cause leaks at low temperatures.

Gasket Temperature Resistance Chart

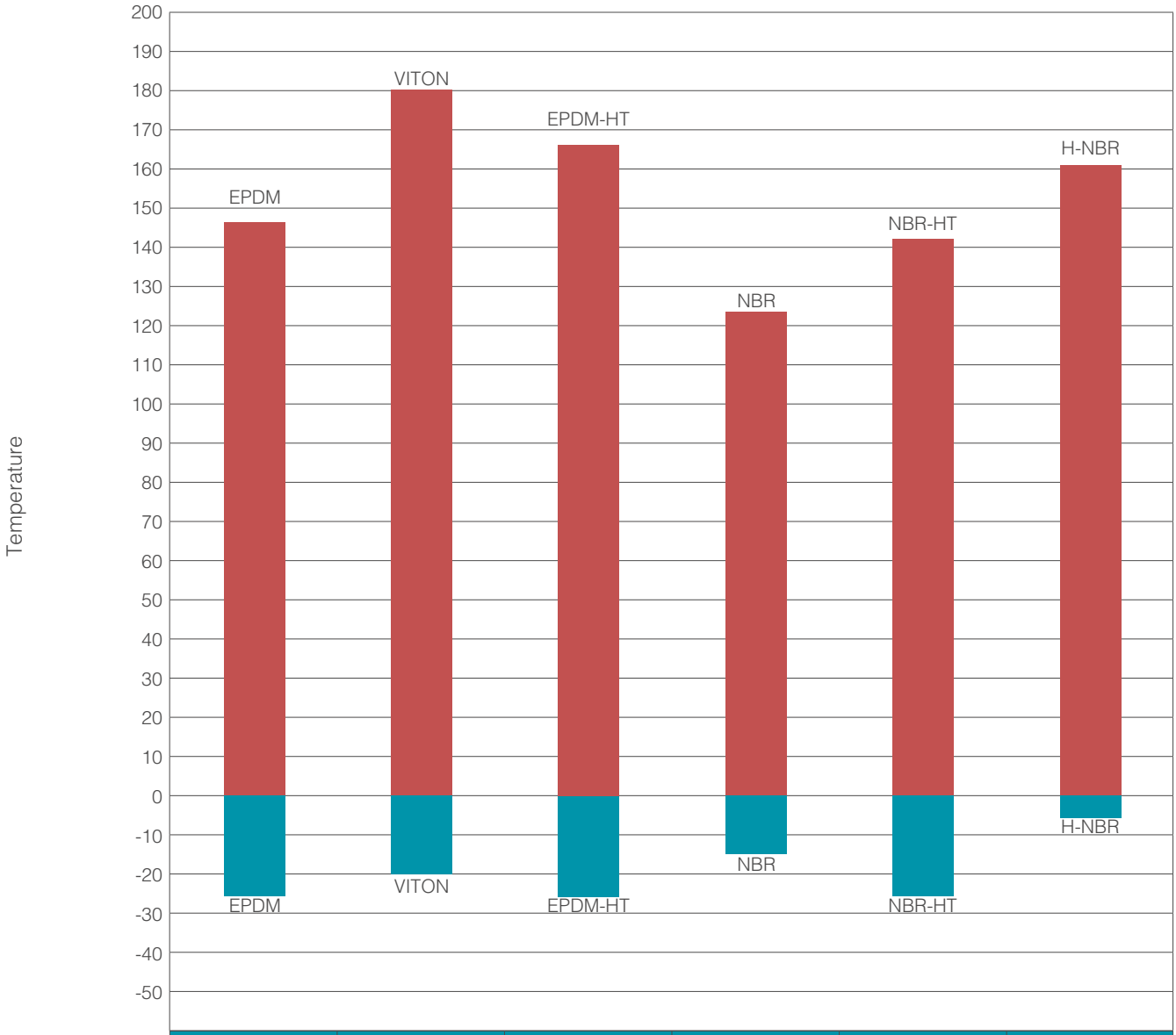

	EPDM	VITON	EPDM-HT	NBR	NBR-HT	H-NBR
Max. Temperature	145	180	165	120	140	140
Min. Temperature	-25	-20	-25	-15	-25	-25

EPDM Gasket

Color Code : White

Maximum Temperature : -25 °C .... + 145 °C

EPDM stands for ethylene propylene diene monomer rubber. EPDM is a kind of polymer material produced by copolymerization of rubber propylene and unsaturated diene. It has a very wide usage area due to its very good properties in both static and dynamic applications.

Recommended Uses

- Ethanol or ethanol mixtures
- Alcohol
- Ketones
- Diluted acids and alkalis
- Water
- Ozone
- Steam systems below 143°

Not Recommended Usage Areas

- Petroleum-based oils and greases
- Halogen solvents
- Aromatic hydrocarbons

If you want to get detailed information about which fluids it is based on, you can contact our sales representative.

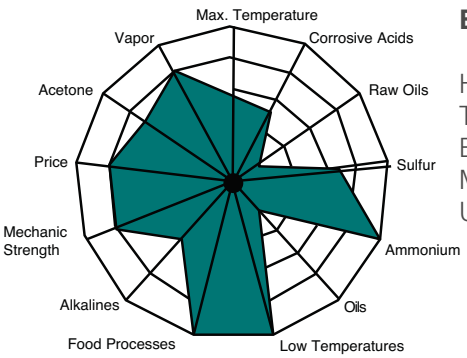

EPDM

Hardness : 80 Shore
Tensile Strength : 17 MPa
Elongation Rate : %240 Food Safe.
Max. Operating Temperature : 150 °C
Usage Areas : Hot water and steam up to 150 °C. Resistance to oxidation.

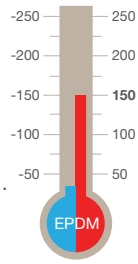

EPDM-HT Gasket

Color Code : White

Maximum Temperature : -25 °C .... + 160 °C

EPDM-HT stands for ethylene propylene diene monomer rubber high temperature.

If you want to get detailed information about which fluids it is based on, you can contact our sales representative.

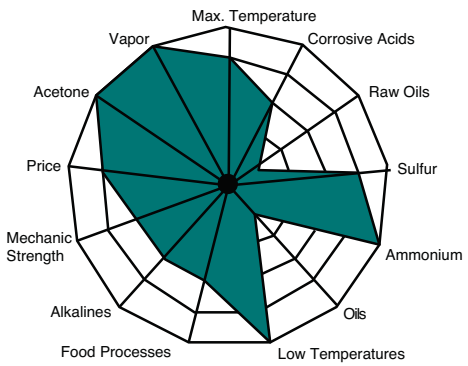

EPDM - HT

Hardness	: 82 Shore
Tensile Strength	: 15 MPa
Elongation Rate	: %180 Food Safe.
Max. Operating Temperature	: 160 °C
Usage Areas:	: Hot water and steam up to 150 °C. Resistance to oxidation.

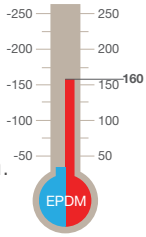

Temperature - Life Graph

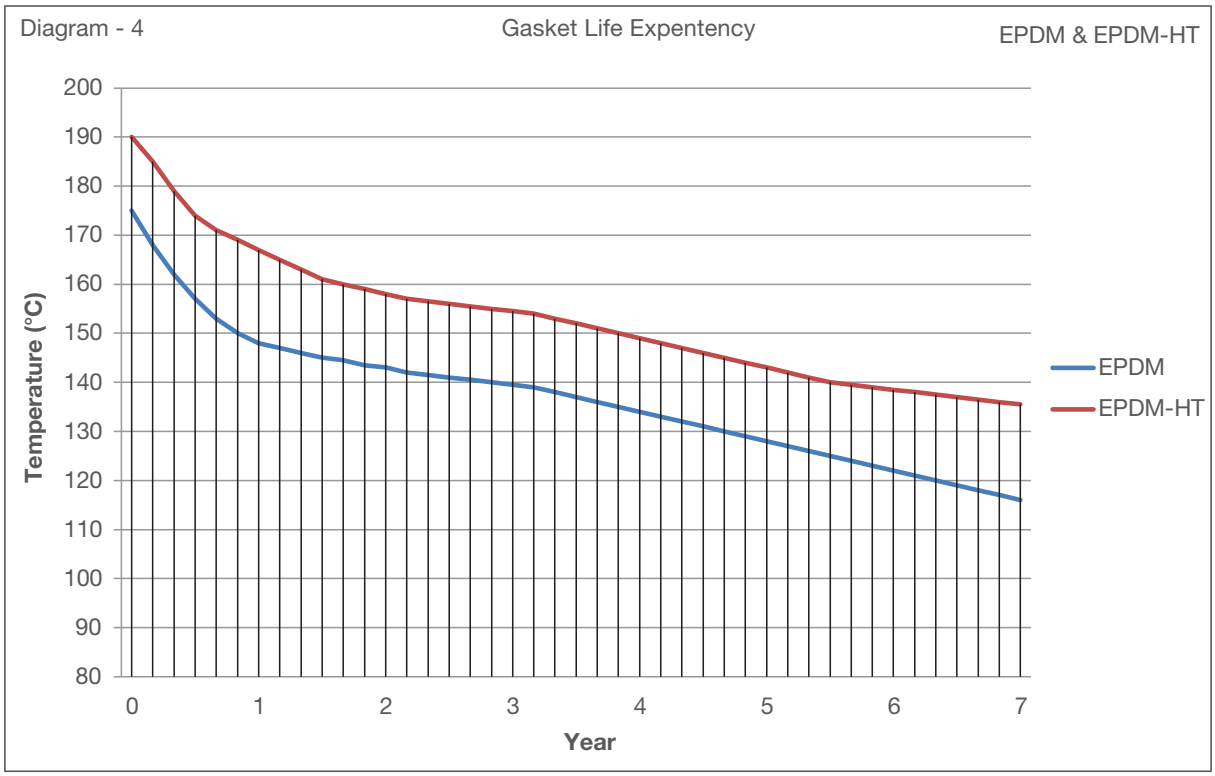

Values may differ according to type of liquid being used and usage conditions.

Temperature - Deformation Graph

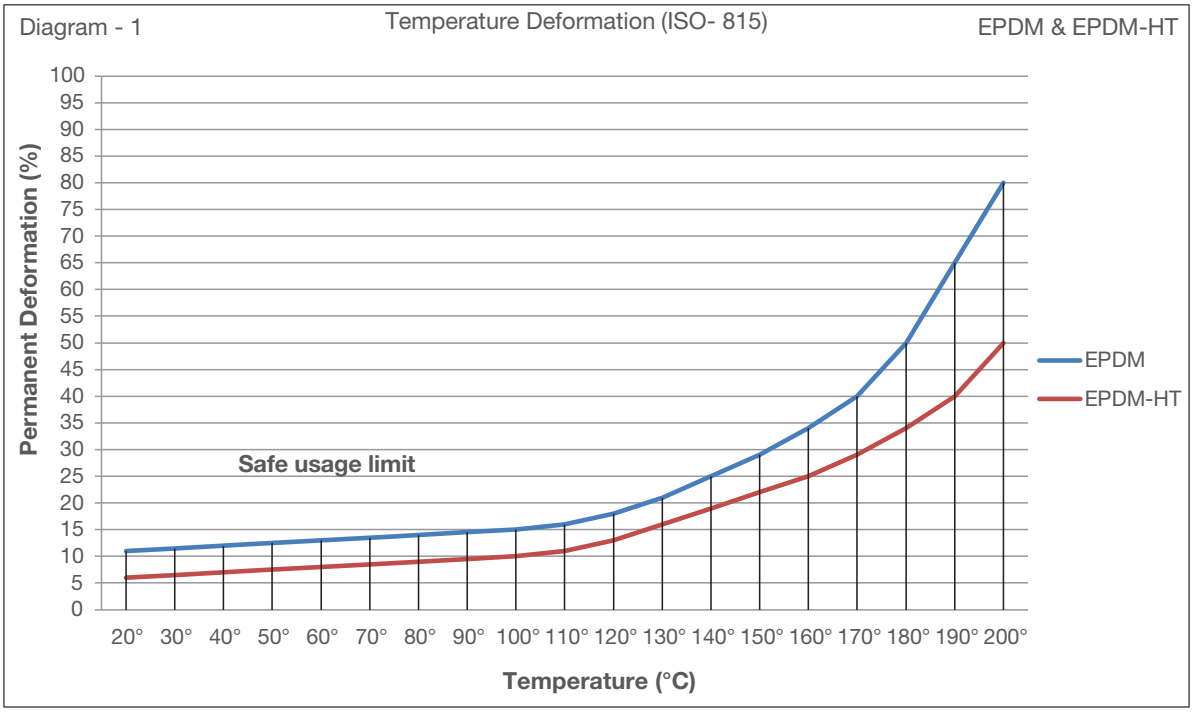

If you want to get detailed information about which fluids it is based on, you can contact our sales representative.

Tension - Elongation Graph

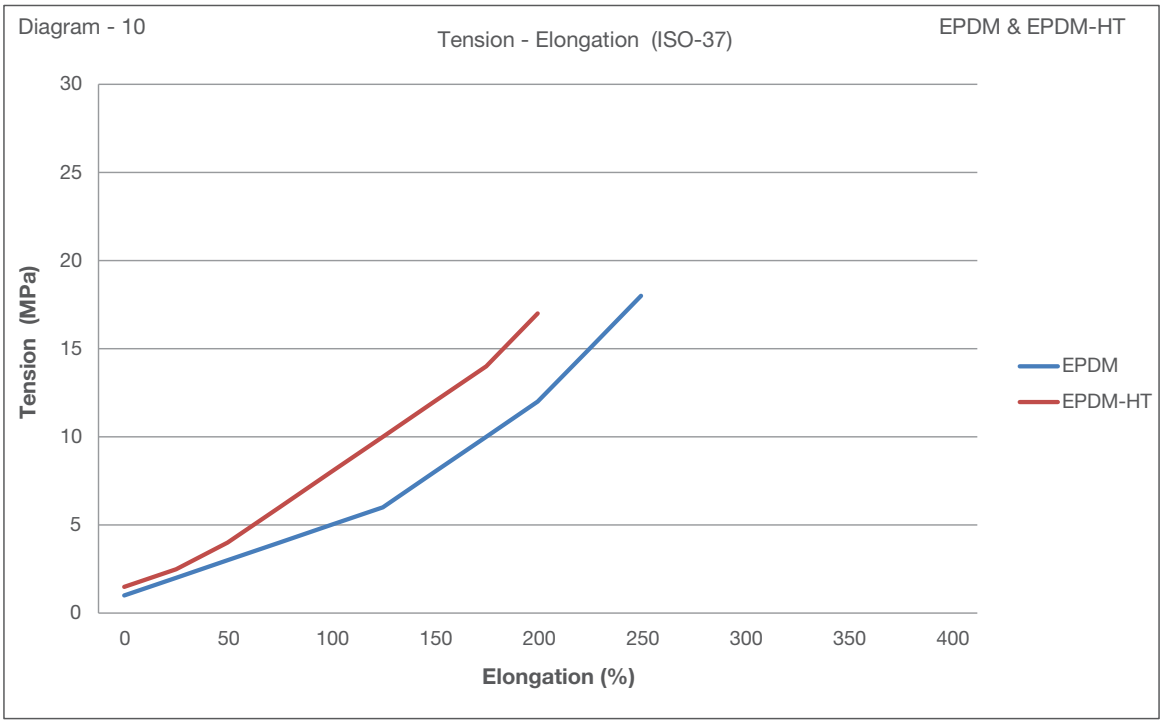

If you want to get detailed information about which fluids it is based on, you can contact our sales representative.

Temperature - Hardness Graph

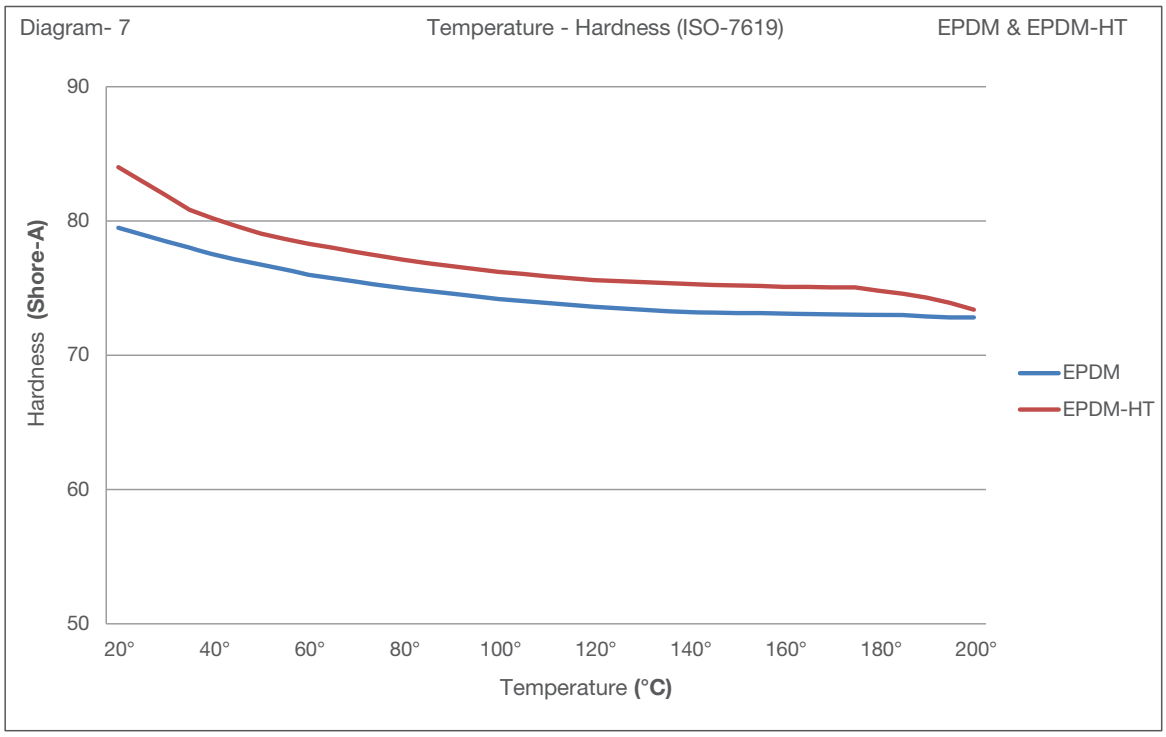

Values may differ according to type of liquid being used and usage conditions.

NBR Gasket

Color Code : Yellow

Maximum Temperature : -25 °C .... + 120 °C

Nitrile rubber is called NBR. It is the most preferred material type due to its functional structure. It has good mechanical properties. Nitrile rubbers are often blended with sulfur. The aging feature is moderate.

Recommended Uses

- Petroleum-based fuels and oils
- Plant-based oils
- Silicone oils and greases
- Diluted acids
- Ethylene glycol
- Hydrocarbon-based oils

Not Recommended Uses

- Strong acids
- Ethers
- Esters
- Ketone
- Steam

If you want to get detailed information about which fluids it is based on, you can contact our sales representative.

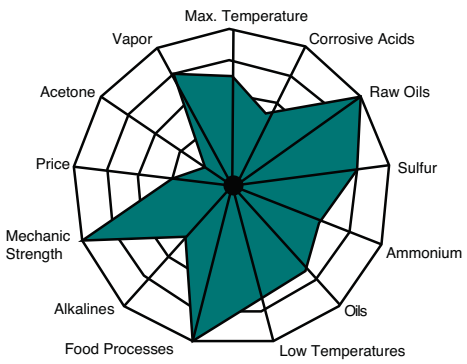

NBR

Hardness : 78 Shore
Tensile Strength : 21 MPa
Elongation Rate : %200 Suitable for food.
Max. Operating Temperature : 120 °C
Usage Areas : Vegetable and mineral oils, hot water up 20 °C.

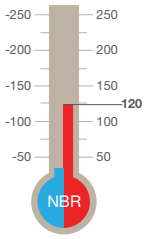

NBR-HT Gasket

Color Code : Yellow

Maximum Temperature : -25 °C .... + 140 °C

It has higher maximum temperature than NBR gaskets. The types of fluids used do not differ.

> If you want to get detailed information about which fluids it is based on, you can contact our sales representative.

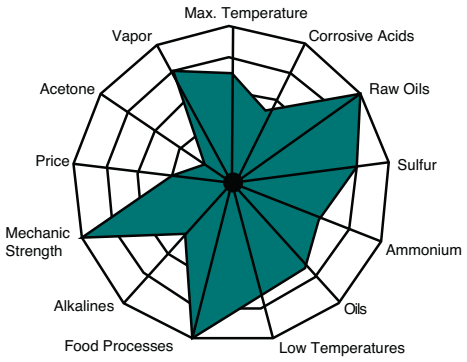

NBR-HT

Hardness : 78 Shore
Tensile Strength : 21 MPa
Elongation Rate : %200 Suitable for food.
Max. Operating Temperature : 140 °C
Usage Areas : Vegetable and mineral oils, hot water up to 20 °C.

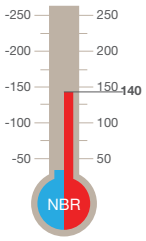

H-NBR Gasket

Color Code : Yellow

Maximum Temperature : -25 °C .... + 160 °C

What sets H-NBR apart from other NBR gaskets is that they can be used in applications requiring a high maximum temperature and resistance up to 2 bar steam (120 °C).

> If you want to get detailed information about which fluids it is based on, you can contact our sales representative.

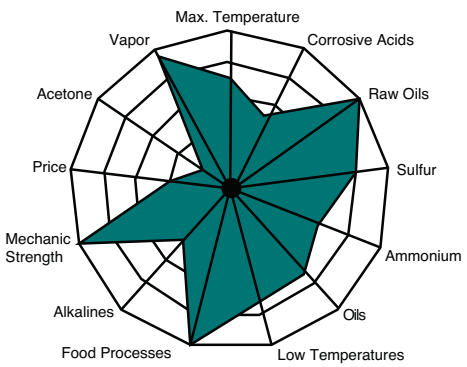

H-NBR

Hardness : 78 Shore
Tensile Strength : 21 MPa
Elongation Rate : %200 Suitable for food.
Max. Operating Temperature : 160 °C
Usage Areas : Vegetable and mineral oils, hot water up to 20 °C.

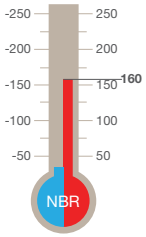

Gasket Life Expectancy

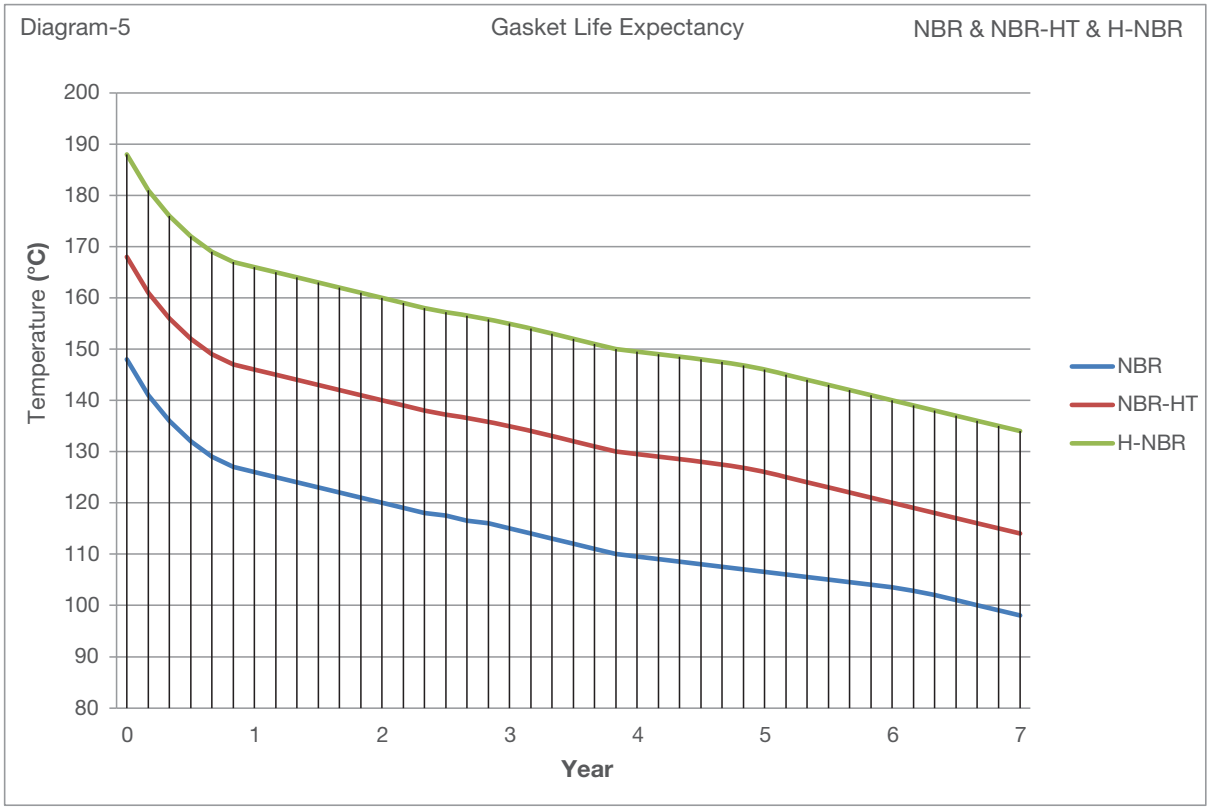

Values may differ according to type of liquid being used and usage conditions.

Temperature - Deformation Graph

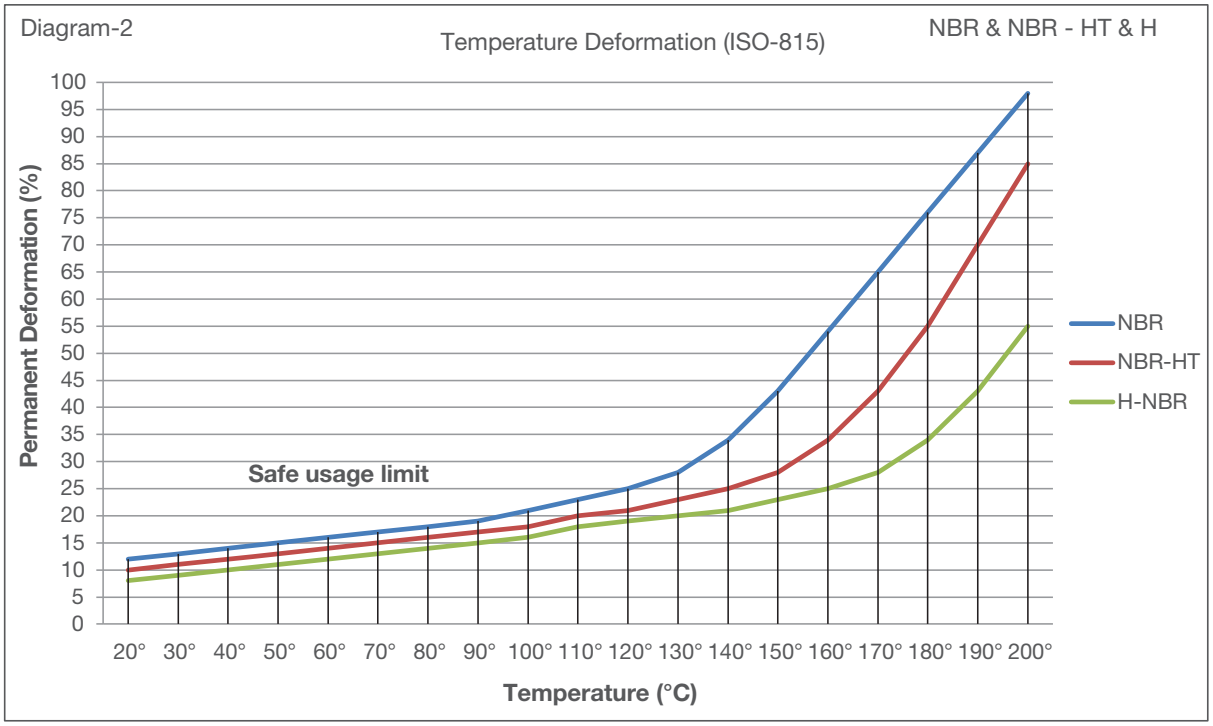

Values may differ according to type of liquid being used and usage conditions.

Tension - Elongation Graph

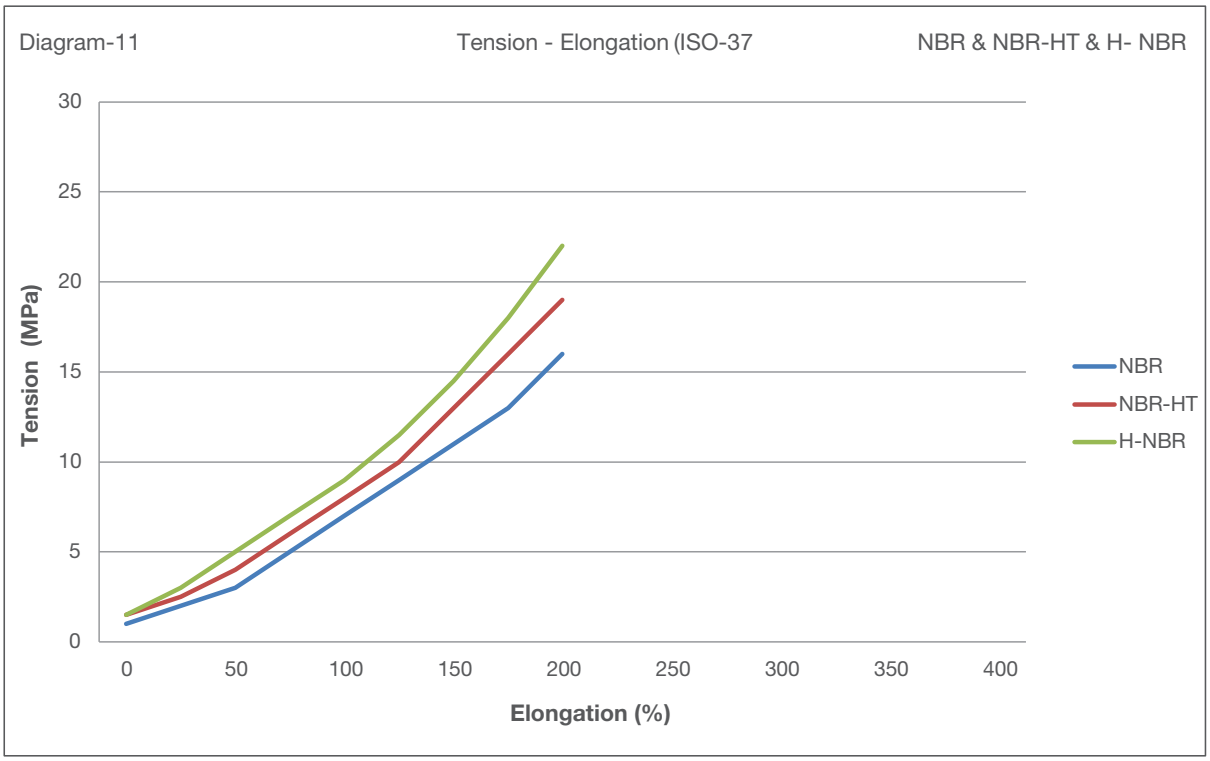

Values may differ according to type of liquid being used and usage conditions.

Temperature - Hardness Graph

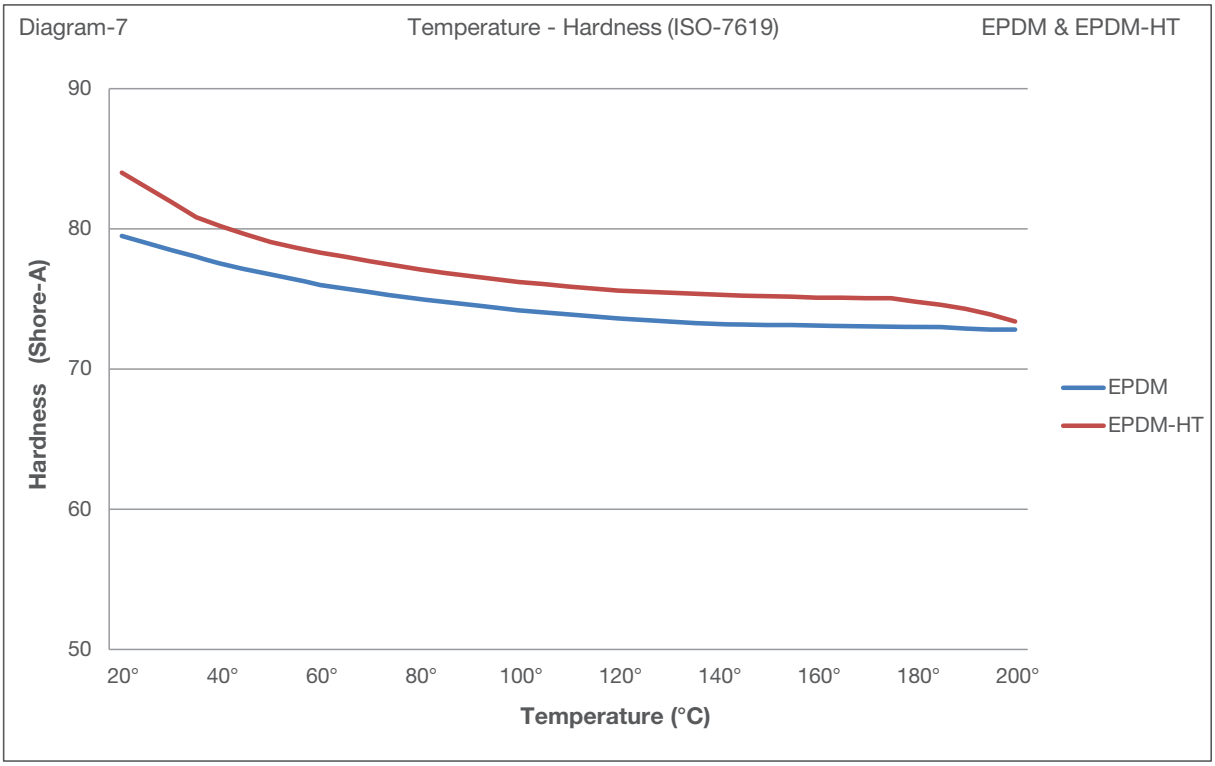

Values may differ according to type of liquid being used and usage conditions.

FKM (Viton) Gasket

Color Code : Grey

Maximum Temperature : -25 °C .... + 180 °C

Fluorocarbon is a high performance rubber. Compared to other rubber materials it has the best aging properties. Due to its superior properties it is an expensive material.

Recommended Uses

- Petrol Products
- Fuel, ethanol or ethanol mixtures
- Diesel or Bio-diesel fuels
- Silicon oils and greases
- Mineral oils and greases
- High pressures
- Ozone, air and extremely high temperatures
- Strong acids

Not Recommended Uses

- Ketones (Organic materials including Acetone)
- Formic and acidic acids (Organic acids with low molecule weight)
- Extreme amounts of Steam
- Esters and ethyl group with low molecule weight

! If you want to get detailed information about which fluids it is based on, you can contact our sales representative.

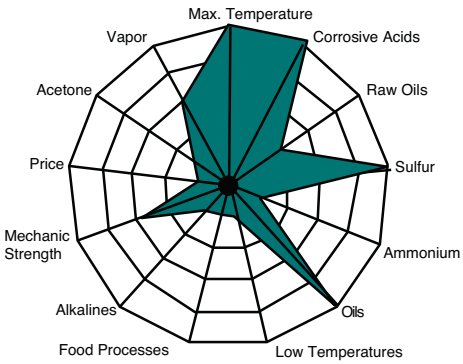

VITON-G

Hardness : 82 Shore
Tensile Strength : 15 MPa
Elongation Rate : %180 Suitable for food.
Max. Operating Temperature : 180 °C High resistance to corrosive fluids.

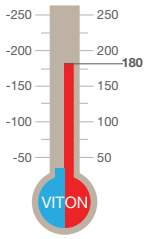

Gasket Life Expectancy

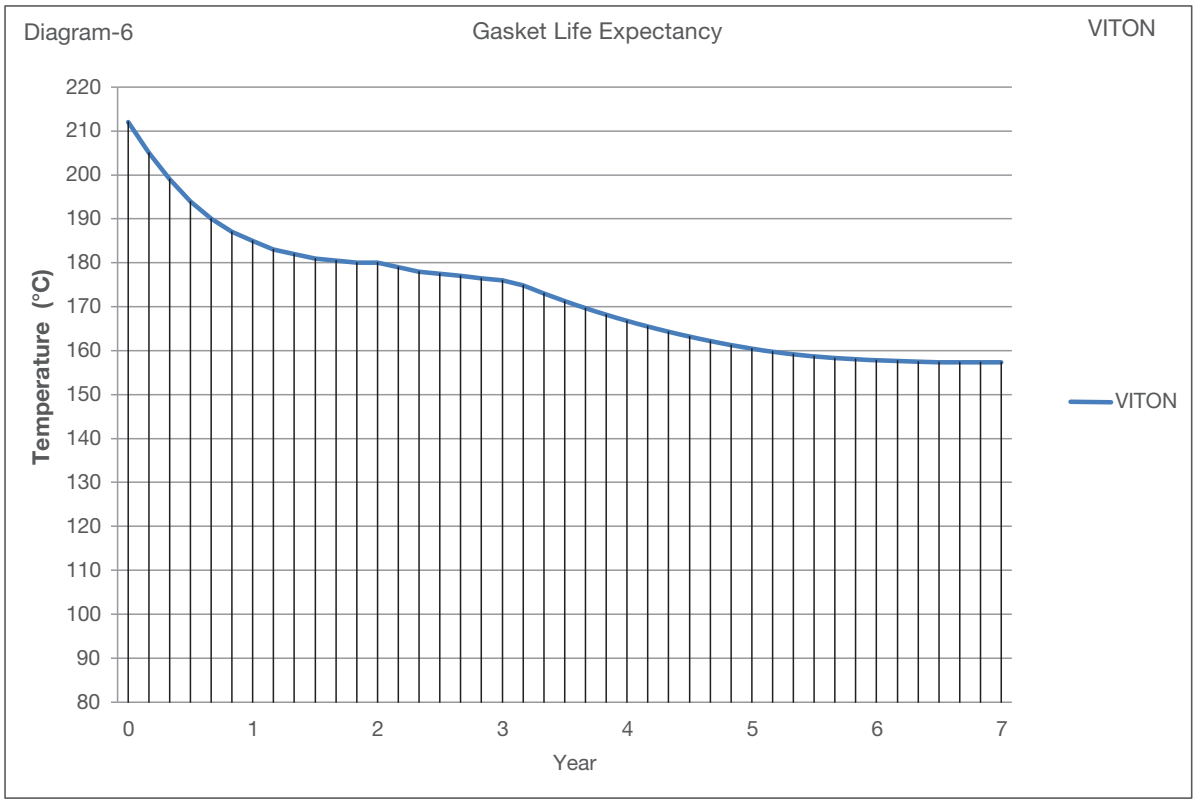

Values may differ according to type of liquid being used and usage conditions.

Temperature - Deformation Graph

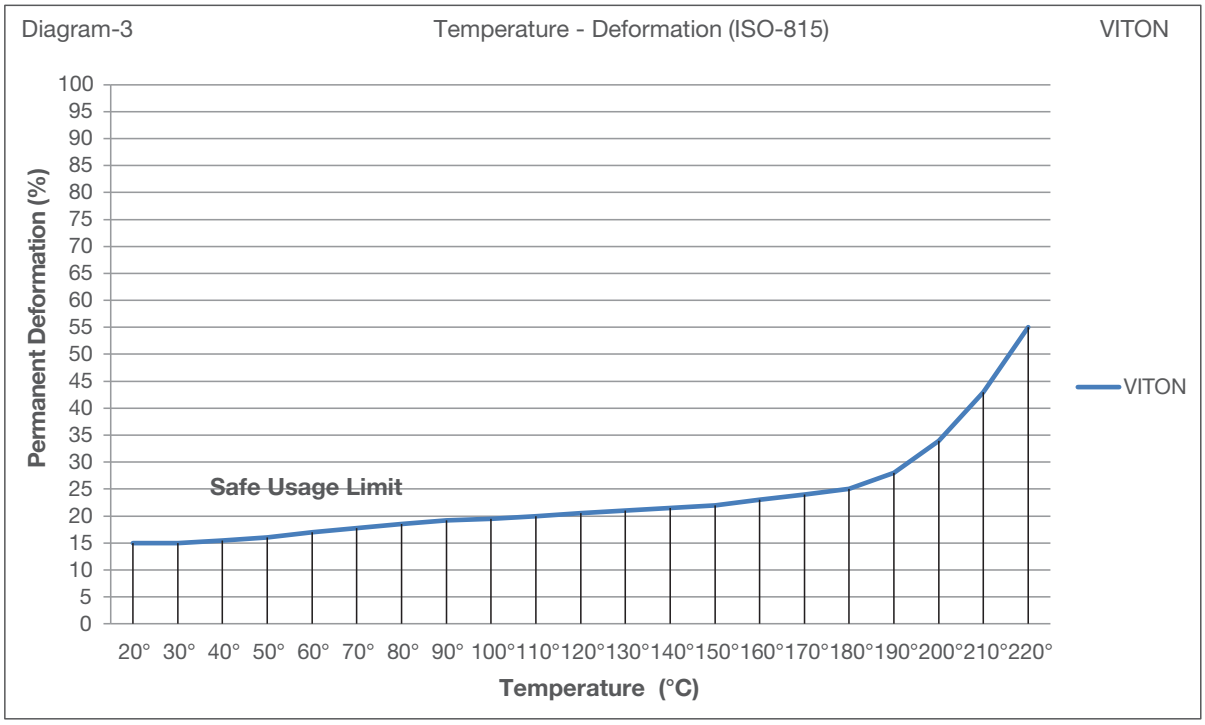

Values may differ according to type of liquid being used and usage conditions.

Stress – Extension Graph

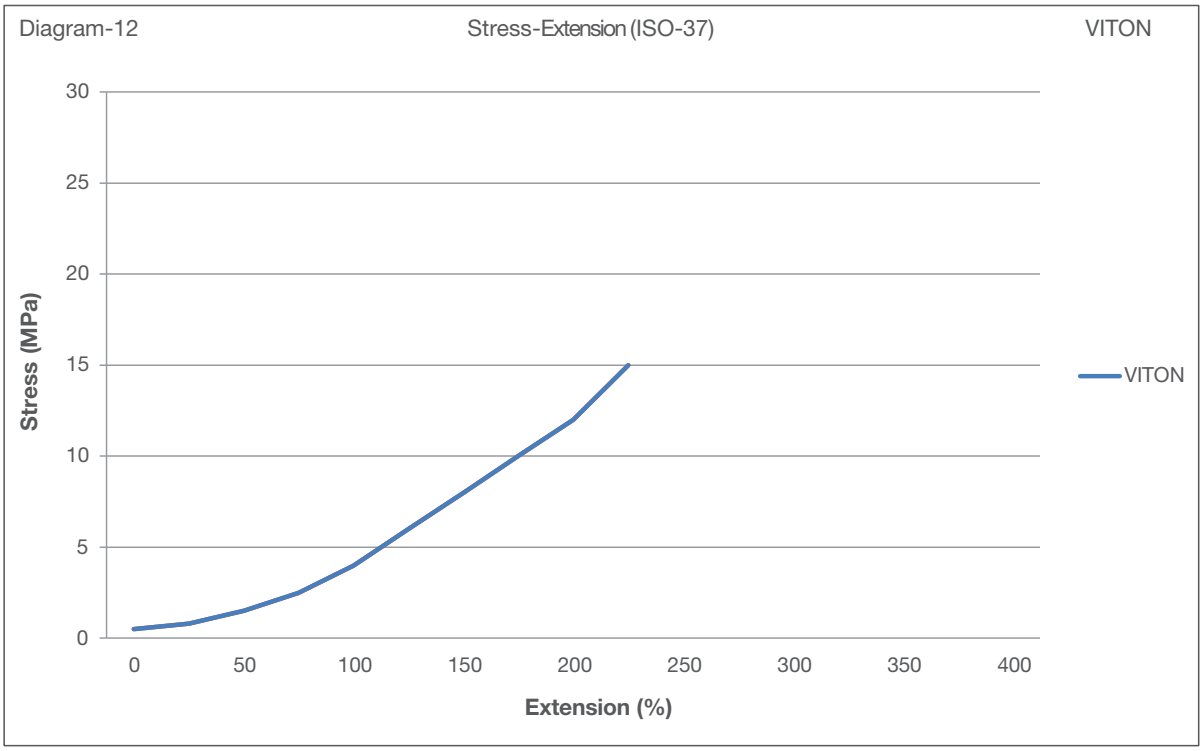

Values may differ according to type of liquid being used and usage conditions.

Temperature – Rigidity Graph

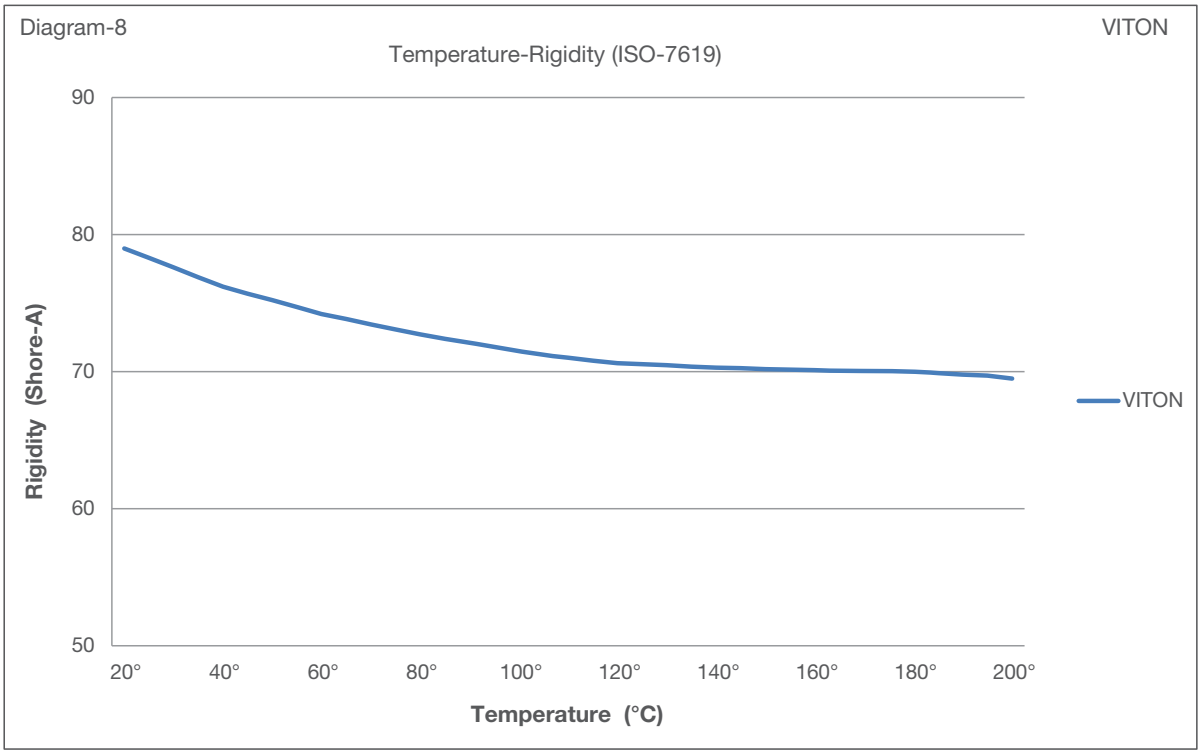

Values may differ according to type of liquid being used and usage conditions.

Service and Repair

The most important part of after sale support is service and repair. As Ekin Endüstriyel we provide replacement parts and service for MIT or other exchangers that we use. Our deep stock of replacement parts is kept to avoid even momentary outages occurring in our systems.

We know how important replacement parts and service costs are to businesses and we offer highly advantageous solutions to our customers. Our goal is to meet our customers need not only with our product quality but with our effective after sale solutions in the future just as we do today.

Advantages of Periodic Maintenance

As with every mechanical product, periodic maintenance is required in exchangers.

Preventive maintenance at low costs, especially before the heat exchanger becomes unusable, plays an effective role in preventing major malfunctions that may occur in the future

In addition, periodic maintenance;

- Lengthens the lifetime of the product,
- Avoids time and work lost by preventing a system failure,
- Prevents extra costs that may occur due to interruption to the system,
- Lastly it is generally beneficial because it prevents a loss in productivity or quality.

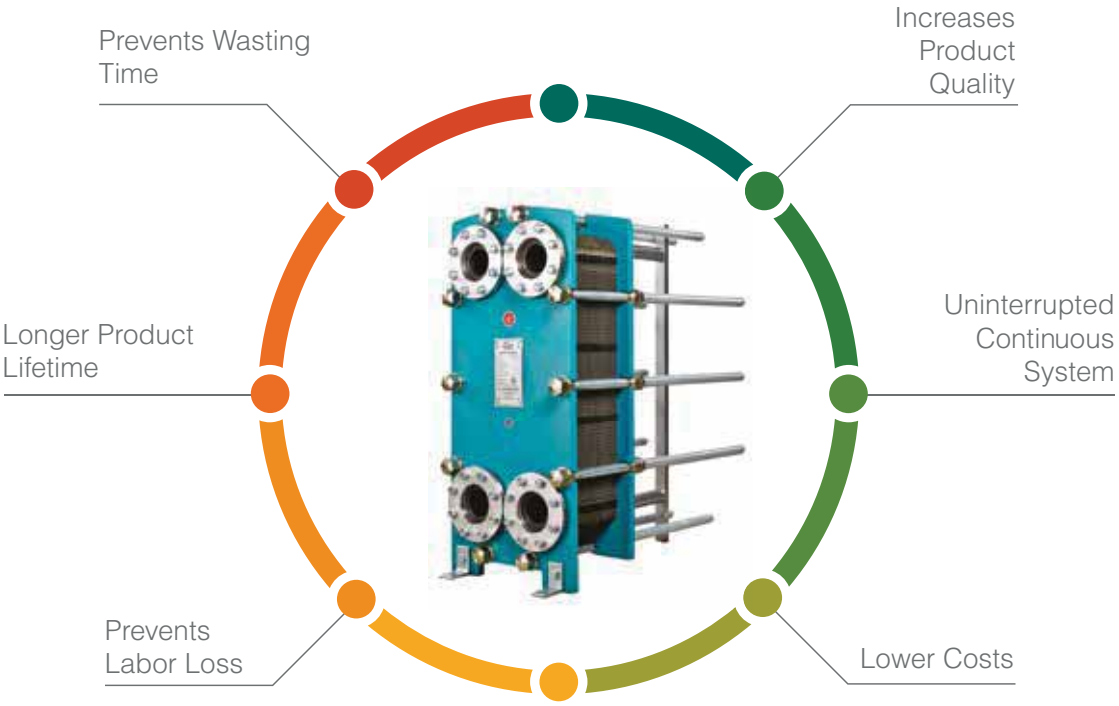

Points to Consider in Heat Exchanger Installation

The plate heat exchanger should be installed and inspected with following points in mind.

Disassembly and Assembly

Enough space should be left for the plates to be easily removed from the upper carrier bar, for inspection and for tightening the plate bundle of the heat exchanger.

The distance of its opening from the wall or other object should be suitable for operations such as removal, inspection, removal of the insulation jacket or enclosure.

Drainage

Ideally, drainage should be placed close to the exchanger. If the fluid cannot be drained directly, a dropper can be put under it. If needed, a level controlled discharge design system can be employed.

Pipe Connections

Plate heat exchanger must be mounted according to the labels specified on the connection ports. Applying filters to the fluid inlets and using a thermometer and manometer are useful for monitoring the efficiency of the heat exchanger. It is important that the plates and gaskets are not damaged during the welding while connecting the heat exchanger.

High Pressures

Pumps may cause vibrations and high pressures. These effects may cause metal fatigue and damage in heat exchanger plates.

Acceptable Pressure

Plate heat exchanger operating and testing pressures are shown on the label located on the front.

Safety Valve Usage

If there is more pressure in the system than the value shown on the heat exchanger, the safety valve should be used. This may be needed during the initial commissioning of the pumps, during expansion or reversing of the valves.

Pressure Shocks

Plate heat exchangers are very sensitive to pressure surges and pressure shocks. This problem may occur when the pumps are first started or when the flow changes direction. This can be avoided with an automatic flow control valve. It is recommended to run the automatic pump when the valve is in the closed position.

Points To Be Considered While Starting Up Heat Exchanger

Controlling Studs

The specified tightening measure must be checked before the first startup. The correct tightening size is indicated on the heat exchanger label.

First Startup

Sudden changes in pressure and temperature should be avoided. Damage to plates and gaskets can cause leakage. Pumps should be operated with closed valves, regulating valves should be opened slowly. In steam applications, steam should be supplied to the system at the very end. This application should be taken into account in the first start-up of any type of plate heat exchangers. First startup measures should be taken against pressure increase during operation.

Stopping and Restarting

Pressure drops and increases should not exceed 10 bars per minute. Temperature drops and increases should not be more than 10 °C per minute.
During stopping or startup phase, the following conditions should be considered

Leaks During Startup Phase

During initial startup, minor leaks may occur until the plates and gaskets reach their designed operating temperatures.

Removing Air

When the system reaches normal operating temperature and pressure, the air formed in it should be removed. It is sufficient to evacuate the air in the plate heat exchanger with the fluid. The remaining air in the heat exchanger reduces heat transfer. It increases pressure losses. It also increases the risk of corrosion.

Startup

During the startup phase, heat and pressure drops should be constantly checked. Increasing pressure losses and temperature changes are indications of clogged plates. In this case, the heat exchanger needs to be cleaned. Necessary first startup measures should be taken against pressure increase during operation.

Shutting It Down For Long Term Breaks

In cases where the heat exchanger will not be operated for a long time, it is recommended to drain the fluids, separate the plates and clean the units. The heat exchanger should be tightened slowly, and the gaskets should be kept closed to protect them from dirt and light.

Periodical Maintenance Contract

From the moment you sign up for the periodic maintenance plan, it starts to provide various advantages. You can access our easy ordering process and our emergency call system with priority support. You can focus on your business as all replacement parts are pre-booked for you.

Preventive Maintenance Procedures

Our teams will be there within the specified day and time, without having to closely follow the service needs of your heat exchanger and order all service operations separately. The purchasing process takes time and can delay the service process, thus increasing your total costs.

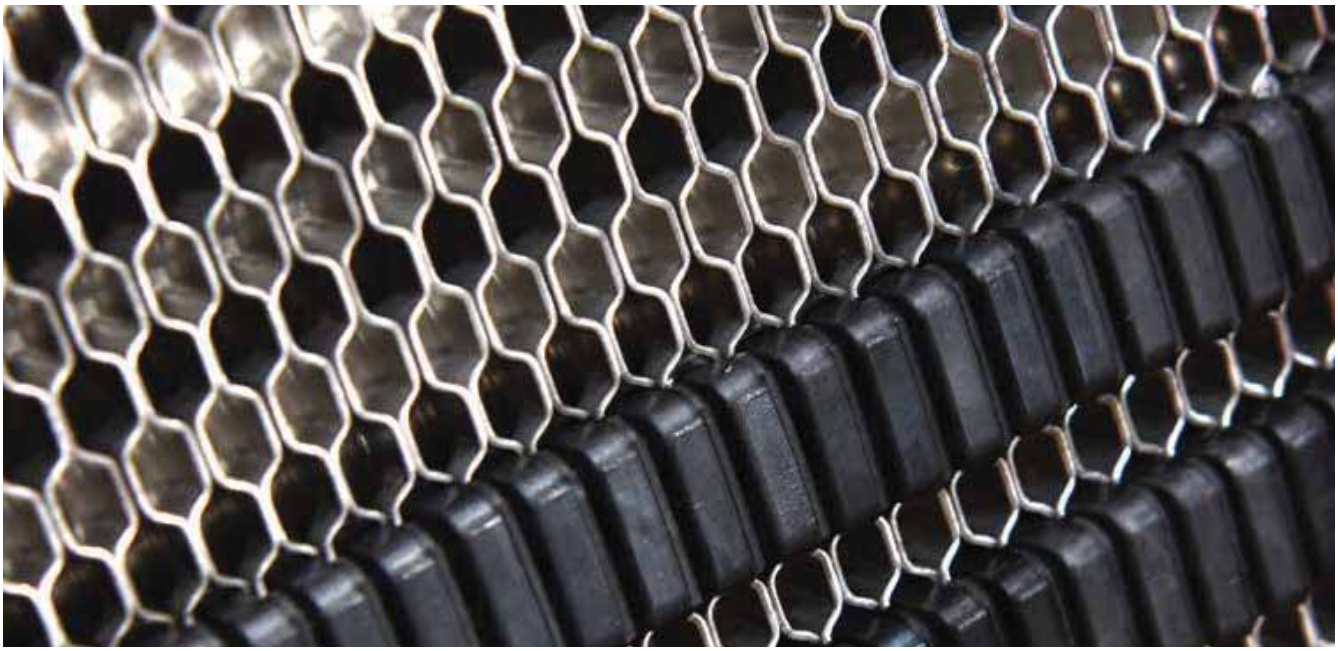

Contents of Our Professional Service

- Plate supply for every brand and model.
- Gasket supply for every brand and model.
- Overhaul and cleaning of heat exchanger bodies.
- Fast and detailed cleaning of heat exchanger plates.
- Descaling of heat exchanger plates with special chemicals.
- Supplying and manufacturing of all types of nuts and studs in heat exchangers.
- Delivery of your heat exchanger in working condition as on the first day.

Possible Problems in Plate Heat Exchangers

- Performance decrease due to calcification,
- Clogging due to sediment and dirt that may come from the installation,
- Excessive pressure losses due to clogging,
- Reduced heat transfer due to clogging,
- Wearing of gaskets over time,
- Loss of sealing properties of gaskets,
- Deformation of the plates by being exposed to corrosion,
- Deformation of the body due to internal and external factors etc.

Cleaning Services for the Heat Exchanger

Plate heat exchangers get dirty over time depending on the systems they are used in and they need to be cleaned in order to reach their old performance.

As a result of sediment in plate heat exchangers, situations such as increase in differential pressures between inlet and outlet of fluids and decrease in heat transfer occur. Although the cause of contamination is directly related to the system used and the fluids passing through the heat exchanger; it is mainly seen in the form of sediment accumulation, calcification, oil contamination.

The following types of sediment are mainly seen in plate heat exchangers:

Residue Build-up

Calcification

Oil Build-up

Information Required Before Making a Cleaning Service Request

Label photo of the heat exchanger should be sent to us. If it is not an MIT brand heat exchanger, the steps below should be followed.

- Label photo of the heat exchanger should be sent to us. If it is not an MIT brand heat exchanger, the steps below should be followed.

- Notifying us of the type and maximum temperatures of the fluids passing through the heat exchanger. The material type of the gaskets and plates of the heat exchanger. There should be a clear photograph showing the inlet direction of the tube connections of the heat exchanger.

- When the photos of the heat exchanger are sent to us so that all parts can be seen from the side, the preliminary control of the parts is provided.

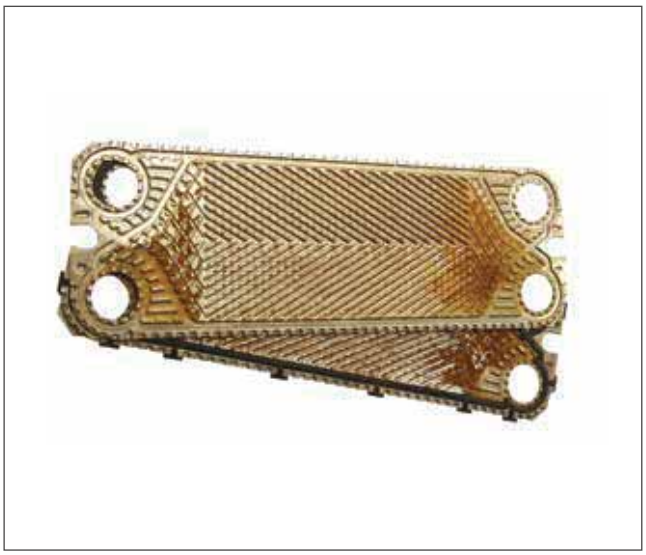

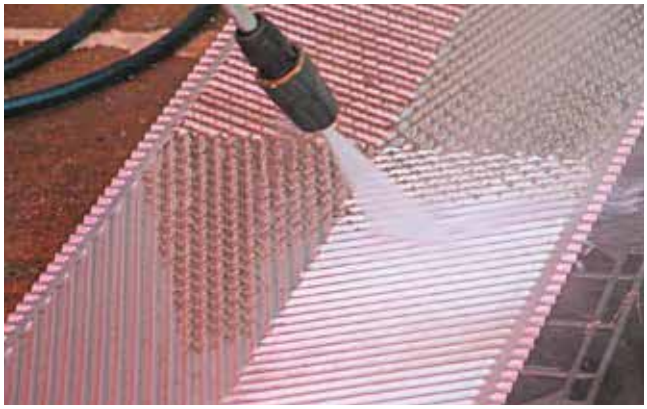


EKIN ENDÜSTRIYEL
EKIN ENDÜSTRI
MIT

EKİN ENDÜSTRİYEL

HEAT TRANSFER PRODUCTS

BRAZED HEAT EXCHANGERS

MIT Brazed Heat Exchangers

MIT brazed heat exchangers are used in refrigeration units as evaporators, condensers, heating applications and instantaneous heaters and in their specific applications. MIT offers the most suitable solutions with a wide range of heat exchangers produced with high quality components.

Capacity and connections for specific applications can be produced as desired. MIT brazed heat exchangers save space thanks to their compact design.

CAPACITY CHART							
PHE Information	MIT MB-01	MIT MB-02	MIT MB-03	MIT MB-04	MIT MB-05	MIT MB-06	MIT MB-07
Cooling Capacity / Heat Capacity (kW)	0.5-4	0.5-4	2-10	2-10	5-15	3-30	30-80
Heat Transfer Area (m^2)	(n-2)x0.012	(n-2)x0.012	(n-2)x0.014	(n-2)x0.022	(n-2)x0.028	(n-2)x0,030	(n-2)x0.120
Design Temperature (°C)	-196-200	-196-200	-196-200	-196-200	-196-200	-196-200	-196-200
Standard Design Pressure (bar)	30	10	30	30	30	30	30
Height Design Pressure (bar)	30	40	45	45	45	45	40
Test Pressure (bar)	15/45	15/60	45/65	45/65	45/65	45/65	45/65
Distribution						Q	Q
Double Cycle	D	D	D	D	D	D	D
Channel Patterns	H	H,L,M	H	H,L,M	H,L,M	H	H
Max. Number of Plates	50	60	60	60	150	150	250
(Height/Width) (mm)	192/73	203/73	230/89	316/73	311/111	325/95	530/250
Empty Weight (n=Number of Plates) (kg)	0.4+0.044xn	0.5+0.05xn	1.1+0.055xn	0.7+0.07xn	1.2+0.1xn	1+0.09xn	7+0.4xn
Max. Brazed Connection Dimensions	7/8"	7/8"	1"	7/8"	1 3/8"	1 3/8"	1 5/8"
Max. Threaded Connection Dimensions	3/4"	3/4"	1"	3/4"	1 1/4"	1 1/4"	2"
Standard Plate Material	AISI316L	AISI316L	AISI316L	AISI316L	AISI316L	AISI316L	AISI316L
Braze Material	Copper or Stainless	Copper or Stainless	Copper or Stainless	Copper or Stainless	Copper or Stainless	Copper or Stainless	Copper or Stainless

CAPACITY CHART					
PHE Information	MIT MB-08	MIT MB-09	MIT MB-10	MIT MB-11	MIT MB-12
Cooling Capacity / Heat Capacity (kW)	10-60	30-200	60-200	150-450	150-500
Heat Transfer Area (m^2)	(n-2)x0.052	(n-2)x0.095	(n-2)x0.113	(n-2)x0.21	(n-2)x0.26
Design Temperature (°C)	-196-200	-196-200	-196-200	-196-200	-196-200
Standard Design Pressure (bar)	30	30	30	30	25
Height Design Pressure (bar)	45	45	40	40	
Test Pressure (bar)	45/67.5	45/67.5	45/60	45/60	45/60
Distribution	Q	Q	Q	Q	
Double Cycle	D	D	D	D	D
Channel Patterns	H,L,M	H,L,M	H	H	H
Max. Number of Plates	150	250	250	500	280
(Height / Width) (mm)	527/111	617/190	490/250	739/322	798/363
Empty Weight (n=Number of Plates) (kg)	1.8+0.23xn	4.6+0.44xn	6.5+0.42xn	13+0.82xn	13.5+0.97xn
Max. Brazed Connection Dimensions	15/8"	21/8"	25/8"	31/8"	4"
Max. Threaded Connection Dimensions	11/4"	2"	21/2"	31/8" Clamp	4" Clamp
Standard Plate Material	AISI316L	AISI316L	AISI316L	AISI316L	AISI316L
Braze Material	Copper or Stainless	Copper or Stainless	Copper or Stainless	Copper or Stainless	Copper or Stainless

MIT brazed plate heat exchangers have been designed for cooling, ventilation and heating processes and have been used safely in these systems for years.

Information

- Minimum temperature: -196 °C
- Maximum temperature: +200 °C
- Design pressure: 30-70 bar
- Suitable for standard and high pressures
- Cooling capacity
- Connection type: Threaded, brazed
- Copper, nickel and stainless

Certificates

- CE Certificate (PED) 97/23/EC
- UL
- IS0 9001: 2015

MIT Brazed Heat Exchangers

Model	MIT MB-01	MIT MB-02	MIT MB-03	MIT MB-04	MIT MB-05	MIT MB-06
Width (mm)	73	73	89	73	111	95
Height (mm)	192	203	230	316	311	325
Depth (mm)	9+2.3n	9+2.3n	9+2.3n	9+2.3n	9+2.3n	9+1.5n
Horizontal Axis Range (mm)	40	42	43	42	50	39
Vertical Axis Range (mm)	154	172	182	278	250	269
Max Operating Pressure (bar)	30	30	30	30	30	30
Test Pressure (bar)	45	45	45	45	45	45
Weight (kg)	0.4+0.044n	0.5+0.05n	1.1+0.055n	0.7+0.07n	1.2+0.1n	1+0.09n

Model	MIT MB-07	MIT MB-08	MIT MB-09	MIT MB-10	MIT MB-11	MIT MB-12
Width (mm)	250	111	190	250	322	363
Height (mm)	530	527	617	490	739	798
Depth (mm)	13+2,3n	9+2.34n	10+2.4n	7.6+2.3n	13+2.8n	13+2.8n
Horizontal Axis Range (mm)	174	50	98	138	188	188
Vertical Axis Range (mm)	456	456	515	378	603	608
Max Operating Pressure (bar)	30	30	30	30	30	30
Test Pressure (bar)	45	45	45	45	45	45
Weight (kg)	7+0.4n	1.8+0.23n	4.6+0.44n	6.5+0.42n	13+0.82n	13.5+0.97n

Model	Standard Connections	Optional Connections	Max. Threaded Connection Diameter	Max. Brazed Connection Diameter
MIT MB-01	Threaded	Brazed	3/4"	7/8"
MIT MB-02	Threaded	Brazed	3/4"	7/8"
MIT MB-03	Threaded	Brazed	3/4"	7/8"
MIT MB-04	Threaded	Brazed	3/4"	7/8"
MIT MB-05	Threaded	Brazed	1 1/4"	13/8"
MIT MB-06	Threaded	Brazed	1 1/4"	13/8"
MIT MB-07	Threaded	Brazed	2"	15/8"
MIT MB-08	Threaded	Brazed	1 1/2"	15/8"
MIT MB-09	Threaded	Brazed	2"	21/8"
MIT MB-10	Threaded	Brazed	2 1/2"	21/8"
MIT MB-11	Clamp	Brazed	3 1/8"	31/8"
MIT MB-12	Clamp	Brazed	4"	4"

Materials	
Plate Material	AISI 316
Connection Material	AISI 304
Braze Material	Copper (Standard) or Stainless

Display of Brazed Heat Exchangers

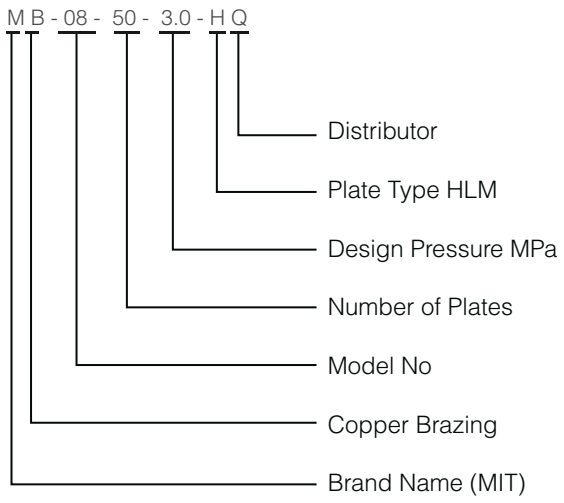

MIT brazed plate heat exchangers can be designed with channel plates with different heat transfer characteristics.

H-Type: The plate has wide-angle channels to make the heat transfer to turbulence the fluid's flow characteristic.

L-Type: Has narrow angles. This reduces the loss of pressure, but the reduction in turbulence reduces heat transfer.

M-Type: A combination of L and H type plates. These plates are particularly preferred when the heat exchange on one side of the plate heat exchanger is much larger than the other side.

Structure of MIT Brazed Heat Exchangers

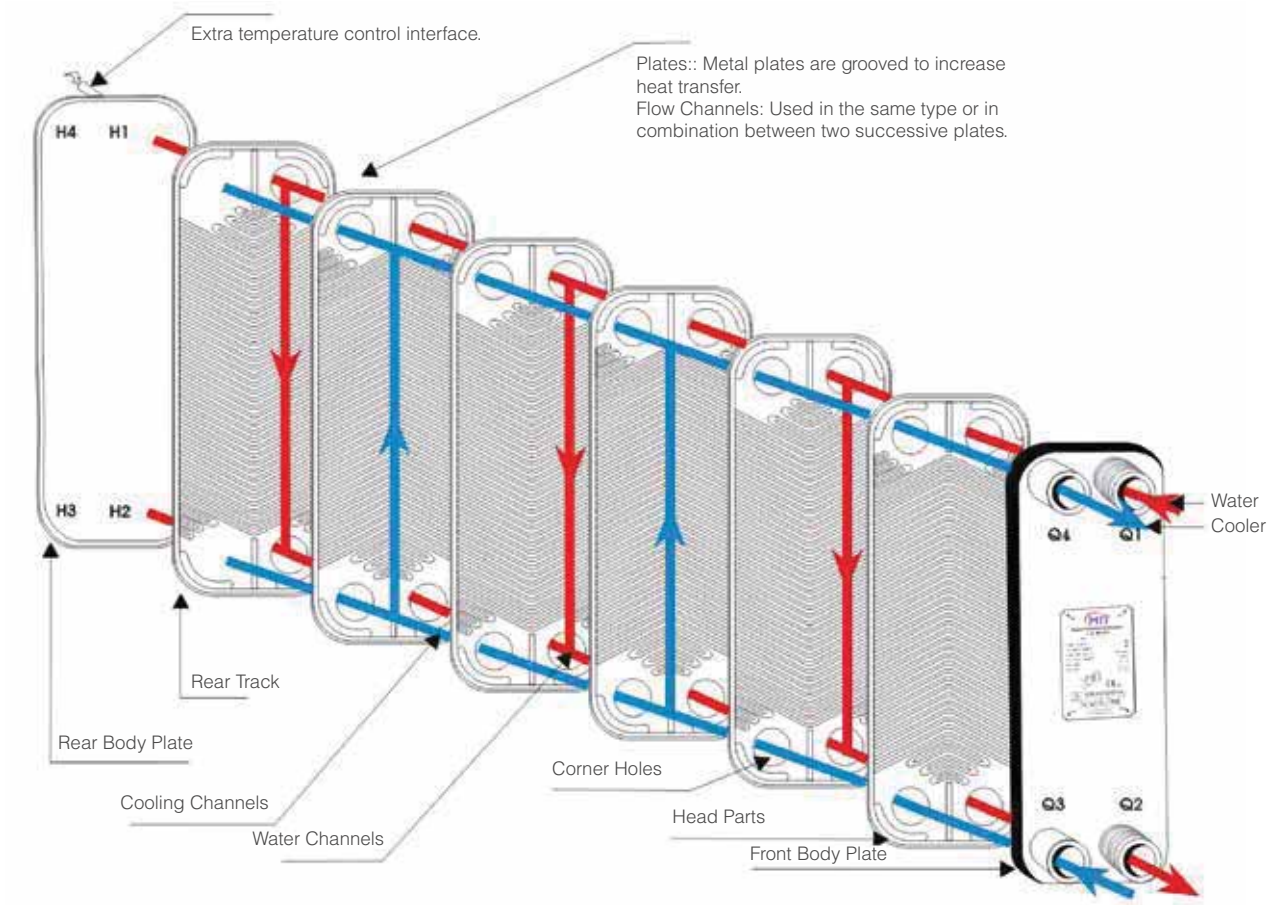

MIT MB-01

MIT MB-01 can be copper or nickel brazed heat exchanger. Plate material 316L.

Front and Rear Bodies

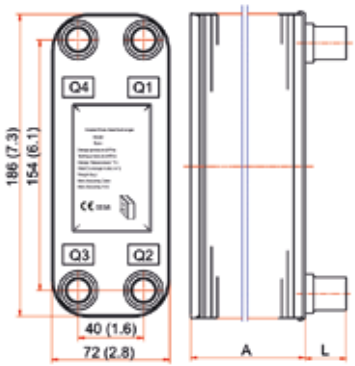

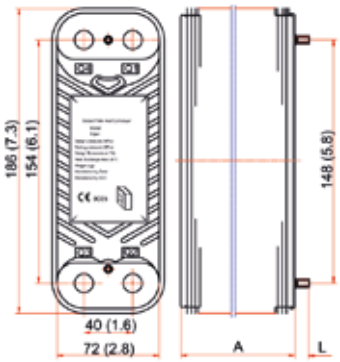

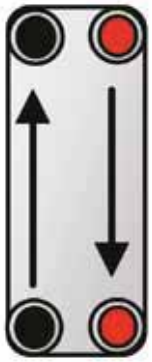

Parallel Flow

Brazed Plate Heat Exchanger / MIT MB-01				
Number of Plates	A (mm)	Weight (kg)	Volume Q1 Q2 Side / Q3 Q4 Side	Heat Exchanger Area (m^2)
n	7+2.3n	0.6+0.044n	0.018x1/2n / 0.018x1/2 (n-2)	(n-2) 0.012

Parameters	
Design Pressure	30 bar
Test Pressure	45 bar
Design Temperature	-196 ~ +200 °C
Plate Type	H
Heat Capacity	30 kW
Maximum Number of Plates	100

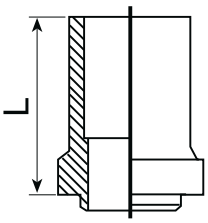

Brazed Connection

Maximum Connection 7/8"

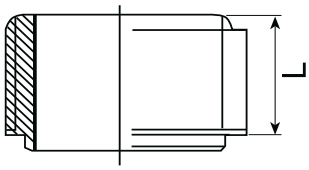

Screwed Connection

Maximum Connection 3/4"

Ekin offers various types of brazed and screwed connections to its customers.

MIT MB-02

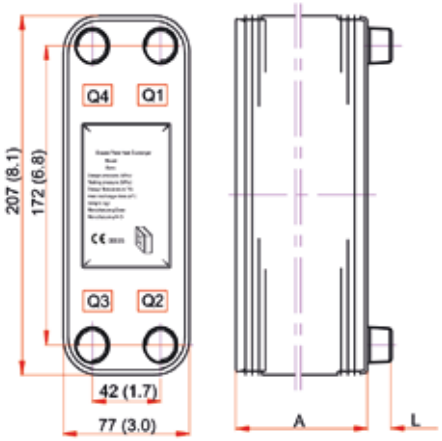

MIT MB-02 can be copper or nickel brazed heat exchanger. Plate material 316L.

Parallel Flow

Brazed Plate Heat Exchanger / MIT MB-02				
Number of Plates	A (mm)	Weight (kg)	Volume Q1 Q2 Side / Q3 Q4 Side	Heat Exchanger Area (m^2)
n	7+2.3n	0.7+0.06n	0.02x1/2n / 0.02x1/2 (n-2)	(n-2) 0.012

Parameters	
Design Pressure	30 bar
Test Pressure	45 bar
Design Temperature	-196 ~ +200 °C
Plate Type	H. L. M.
Heat Capacity	35 kW
Maximum Number of Plates	110

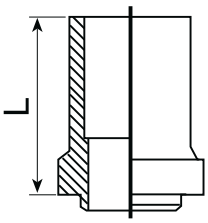

Brazed Connection

Maximum Connection 7/8"

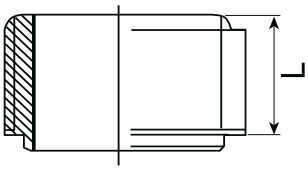

Screwed Connection

Maximum Connection 3/4"

Ekin offers various types of brazed and screwed connections to its customers.

MIT MB-03

MIT MB-03 can be copper or nickel brazed heat exchanger. Plate material 316L.

Customized

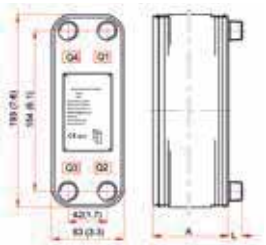

Channels of Front Plate

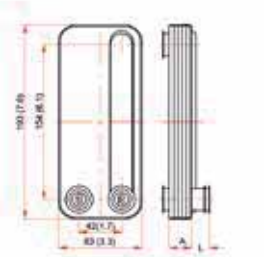

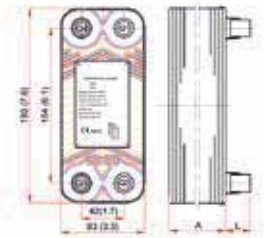

Cross Flow

Brazed Plate Heat Exchanger / MIT MB-03				
Number of Plates	A (mm)	Weight (kg)	Volume Q1 Q2 Side / Q3 Q4 Side	Heat Exchanger Area (m^2)
n	7+2.3n	0.6+0.06n	0.022x1/2n / 0.022x1/2 (n-2)	(n-2) 0.014

Parameters	
Design Pressure	30 bar
Test Pressure	45 bar
Design Temperature	-196 ~ +200 °C
Plate Type	H
Heat Capacity	40 kW
Maximum Number of Plates	100

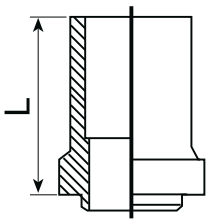

Brazed Connection

Maximum Connection 7/8"

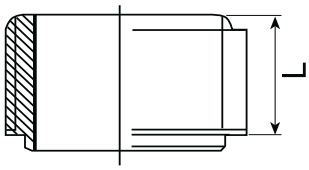

Screwed Connection

Maximum Connection 3/4"

Ekin offers various types of brazed and screwed connections to its customers.

MIT MB-04

MIT MB-04 can be copper or nickel brazed heat exchanger. Plate material 316L.

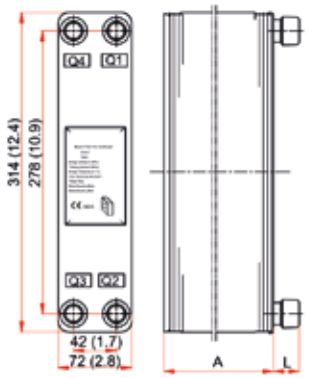

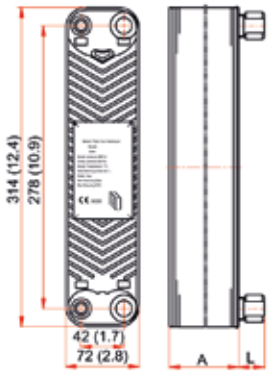

Parallel Flow

Brazed Plate Heat Exchanger / MIT MB-04				
Number of Plates	A (mm)	Weight (kg)	Volume Q1 Q2 Side / Q3 Q4 Side	Heat Exchanger Area (m^2)
n	7+2.3n	1.1+0.09n	0.04x1/2n / 0.04x1/2 (n-2)	(n-2) 0.022

Parameters	
Design Pressure	30 bar
Test Pressure	45 bar
Design Temperature	-196 ~ +200 °C
Plate Type	H. L. M.
Heat Capacity	150 kW
Maximum Number of Plates	100

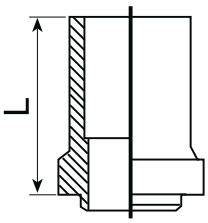

Brazed Connection

Maximum Connection 7/8"

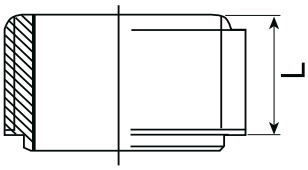

Screwed Connection

Maximum Connection 3/4"

Ekin offers various types of brazed and screwed connections to its customers.

MIT MB-05

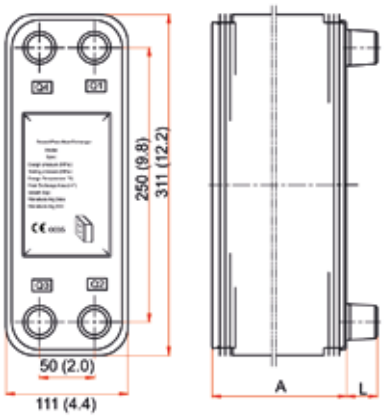

MIT MB-05 can be copper or nickel brazed heat exchanger. Plate material 316L.

Parallel Flow

Brazed Plate Heat Exchanger / MIT MB-05				
Number of Plates	A (mm)	Weight (kg)	Volume Q1 Q2 Side / Q3 Q4 Side	Heat Exchanger Area (m^2)
n	9+2.5n	1.2+0.13n	0.05x1/2n / 0.05x1/2 (n-2)	(n-2) 0.028

Parameters	
Design Pressure	30 bar (A type) 45 bar (B type)
Test Pressure	45 bar (A type) 67,5 bar (B type)
Design Temperature	-196 ~ +200 °C
Plate Type	H. L. M.
Heat Capacity	4-25 kW (in Air Heat Exchangers)
Maximum Number of Plates	150

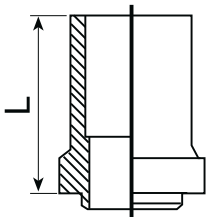

Brazed Connection

Maximum Connection 1"3/8

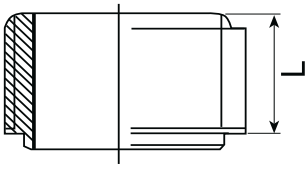

Screwed Connection

Maximum Connection 1"1/4

Ekin offers various types of brazed and screwed connections to its customers.

MIT MB-06

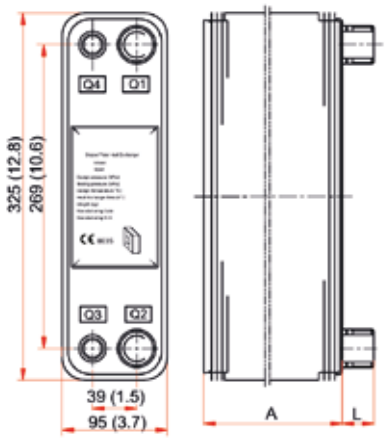

MIT MB-06 can be copper or nickel brazed heat exchanger. Plate material 316L.

Parallel Flow

Brazed Plate Heat Exchanger / MIT MB-06				
Number of Plates	A (mm)	Weight (kg)	Volume Q1 Q2 Side / Q3 Q4 Side	Heat Exchanger Area (m^2)
n	9+1.5n	1.0+0.09n	0.28x1/2n / 0.28x1/2 (n-2)	(n-2) 0.030

Parameters	
Design Pressure	30 bar (A type) 45 bar (B type)
Test Pressure	45 bar (A type) 67,5 bar (B type)
Design Temperature	-196 ~ +200 °C
Plate Type	H
Heat Capacity	30-50 kW (in Air Heat Exchangers)
Maximum Number of Plates	150

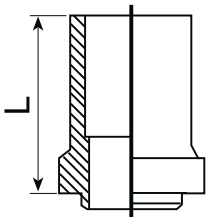

Brazed Connection

Maximum Connection 1"3/4

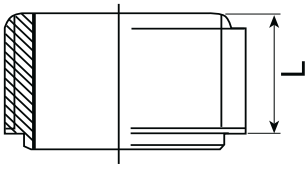

Screwed Connection

Maximum Connection 1"1/4

Ekin offers various types of brazed and screwed connections to its customers.

MIT MB-07

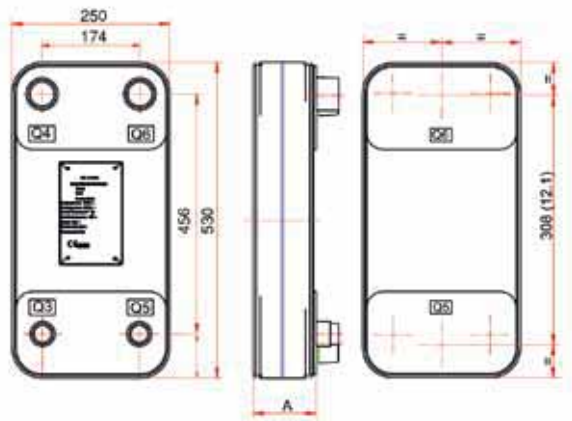

Parallel Flow

MIT MB-07 can be copper or nickel brazed heat exchanger. Plate material 316L.

Brazed Plate Heat Exchanger MIT MB-07				
Number of Plates	A (mm)	Weight (kg)	Volume Q1 Q2 Side / Q3 Q4 Side	Heat Exchanger Area (m^2)
n	13+2.3n	7+0.40n	0.094x1/2n / 0.094x1/4 (n-2)	(n-2) 0.120

Parameters	
Design Pressure	30 bar (A type) 45 bar (B type)
Test Pressure	45 bar (A type) 67,5 bar (B type)
Design Temperature	-196 ~ +200 °C
Plate Type	H. L. M.
Heat Capacity	30-300 kW
Maximum Number of Plates	250

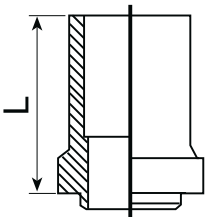

Brazed Connection

Maximum Connection 2"

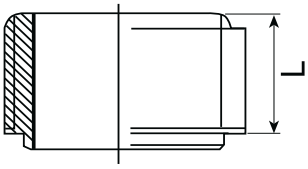

Screwed Connection

Maximum Connection 2"

Ekin offers various types of brazed and screwed connections to its customers.

MIT MB-08

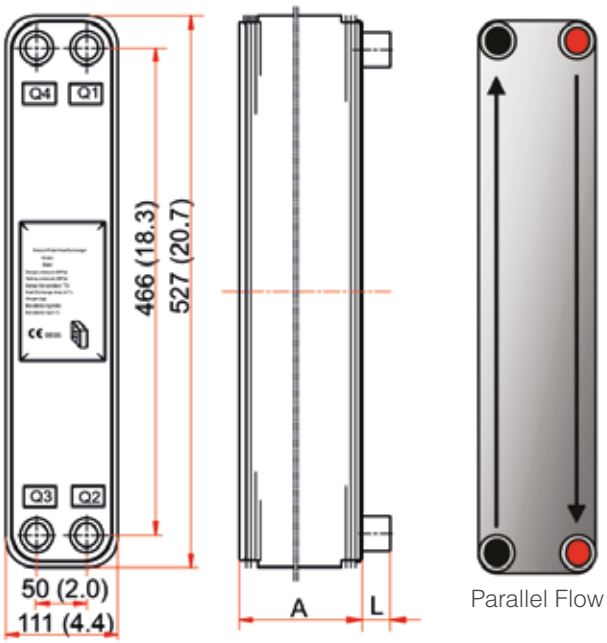

MIT MB-08 can be copper or nickel brazed heat exchanger. Plate material 316L.

Brazed Plate Heat Exchanger MIT MB-08				
Number of Plates	A (mm)	Weight (kg)	Volume Q1 Q2 Side / Q3 Q4 Side	Heat Exchanger Area (m^2)
n	9+2.4n	1.8+0.23n	0.094x1/2n / 0.094x1/2 (n-2)	(n-2) 0.050

Parameters	
Design Pressure	30 bar (A type) 45 bar (B type)
Test Pressure	45 bar (A type) 67,5 bar (B type)
Design Temperature	-196 ~ +200 °C
Plate Type	H. L. M.
Heat Capacity	10-60 kW
Maximum Number of Plates	150

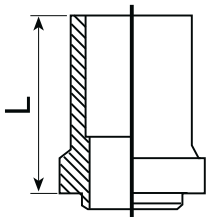

Brazed Connection

Maximum Connection 1"5/8

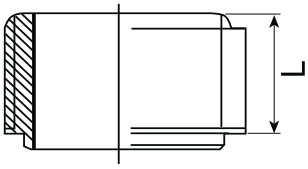

Screwed Connection

Maximum Connection 1"1/2

Ekin offers various types of brazed and screwed connections to its customers.

MIT MB-09

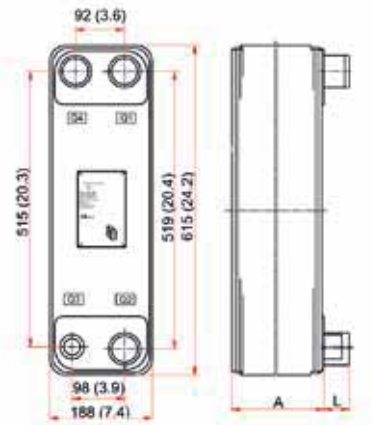

MIT MB-09 can be copper or nickel brazed heat exchanger. Plate material 316L.

Parallel Flow

Brazed Plate Heat Exchanger / MIT MB-09				
Number of Plates	A (mm)	Weight (kg)	Volume Q1 Q2 Side / Q3 Q4 Side	Heat Exchanger Area (m^2)
n	10+2.4n	4.6+0.41n	0.25x1/2n / 0.25x1/4 (n-2)	(n-2) 0.095

Parameters	
Design Pressure	30 bar (A type) 45 bar (B type)
Test Pressure	45 bar (A type) 67,5 bar (B type)
Design Temperature	-196 ~ +200 °C
Plate Type	H. L. M.
Heat Capacity	30-200 kW
Maximum Number of Plates	200

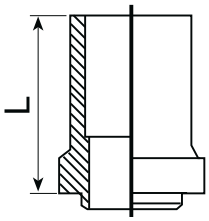

Brazed Connection

Maximum Connection 2"1/8

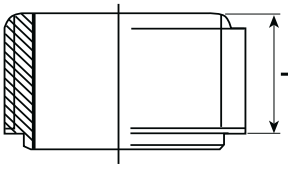

Screwed Connection

Maximum Connection 2"

Ekin offers various types of brazed and screwed connections to its customers.

MIT MB-10

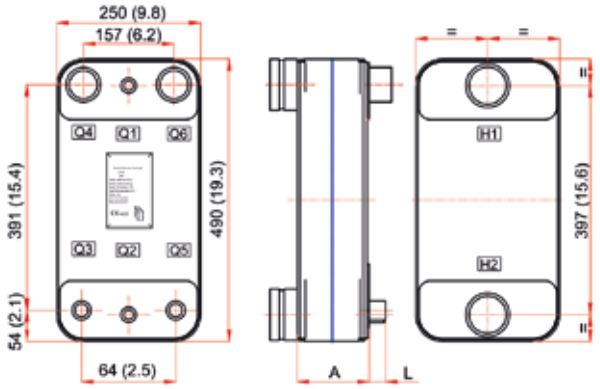

MIT MB-10 can be copper or nickel brazed heat exchanger. Plate material 316L.

Brazed Plate Heat Exchanger / MIT MB-10				
Number of Plates	A (mm)	Weight (kg)	Volume Q1 Q2 Side / Q3 Q4 Side	Heat Exchanger Area (m^2)
n	7.6+2.3n	6.5+0.386n	0.16x1/2n / 0.16x1/4 (n-2)	(n-2) 0.113

Parameters	
Design Pressure	30 bar
Test Pressure	45 bar
Design Temperature	-198 ~ +200 °C
Plate Type	H
Heat Capacity	60-200 kW
Maximum Number of Plates	198

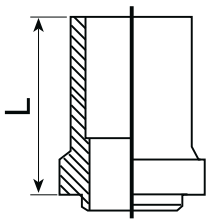

Brazed Connection

Maximum Connection 2"5/8

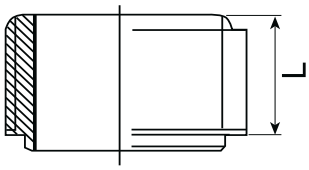

Screwed Connection

Maximum Connection 2"1/2

Ekin offers various types of brazed and screwed connections to its customers.

MIT MB-11

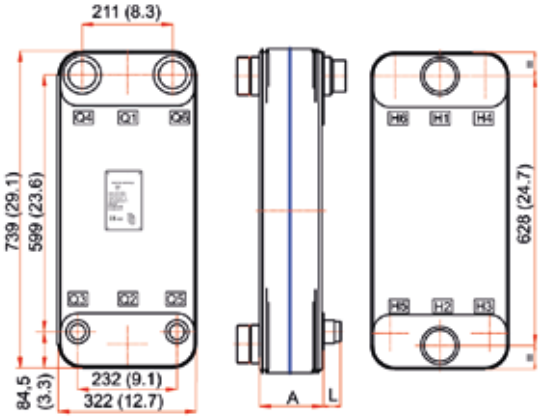

MIT MB-11 can be copper or nickel brazed heat exchanger. Plate material 316L.

Brazed Plate Heat Exchanger / MIT MB-11				
Number of Plates	A (mm)	Weight (kg)	Volume Q1 Q2 Side / Q3 Q4 Side	Heat Exchanger Area (m^2)
n	13+2.8n	13+0.8n	0.4x1/2n / 0.4x1/4 (n-2)	(n-2) 0.210

Parameters	
Design Pressure	30 bar
Test Pressure	45 bar
Design Temperature	-198 ~ +200 °C
Plate Type	H
Heat Capacity	150-450 kW
Maximum Number of Plates	250

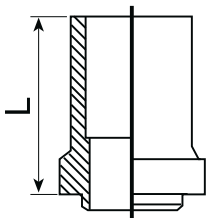

Brazed Connection

Maximum Connection 3"1/8

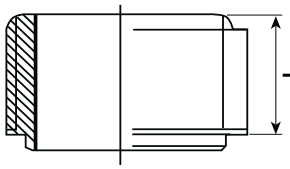

Screwed Connection

Maximum Connection 3"1/8

Ekin offers various types of brazed and screwed connections to its customers.

MIT MB-12

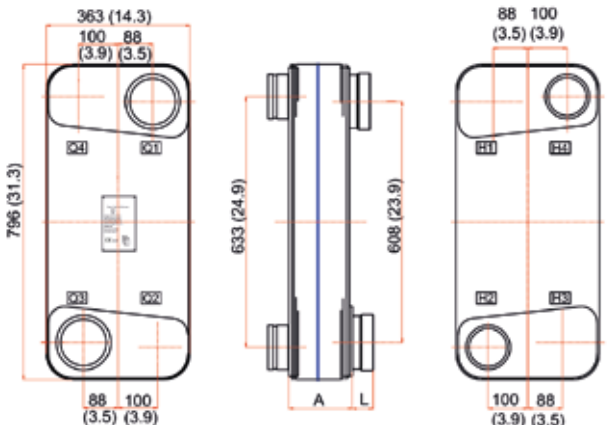

Cross Flow

MIT MB-12 can be copper or nickel brazed heat exchanger. Plate material 316L.

Brazed Plate Heat Exchanger / MIT MB-12				
Number of Plates	A (mm)	Weight (kg)	Volume Q1 Q2 Side / Q3 Q4 Side	Heat Exchanger Area (m^2)
n	13+2.8n	13.5+0.97n	0.6x1/2n / 0.6x1/4 (n-2)	(n-2) 0.260

Parameters	
Design Pressure	30 bar
Test Pressure	45 bar
Design Temperature	-196 ~ +200 °C
Plate Type	H
Heat Capacity	150-450 kW
Maximum Number of Plates	250

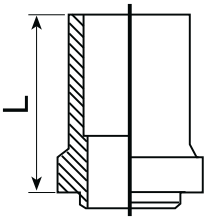

Brazed Connection

Maximum Connection 4"

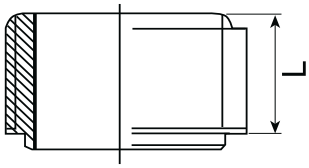

Screwed Connection

Maximum Connection 2"

Ekin offers various types of brazed and screwed connections to its customers.

Cooling and Heating Applications

Refrigeration (Water Source)

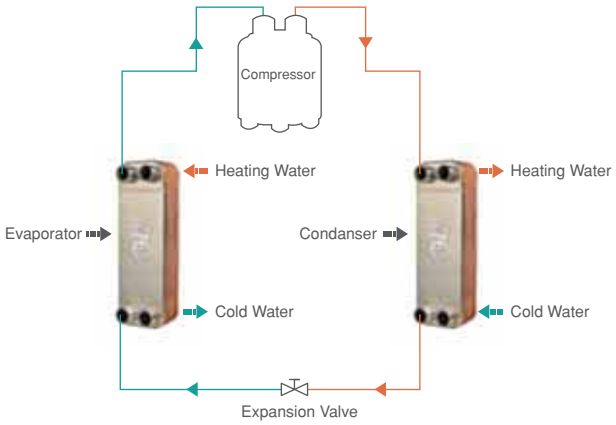

Absorbed Refrigeration

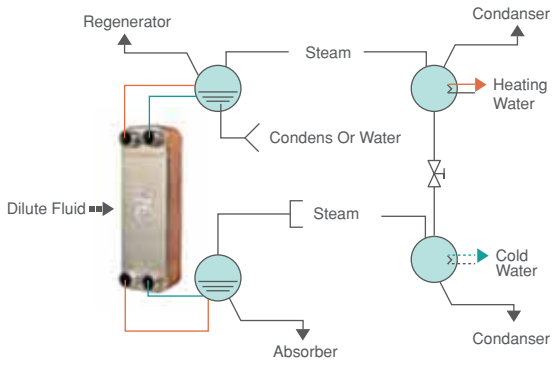

Economizer

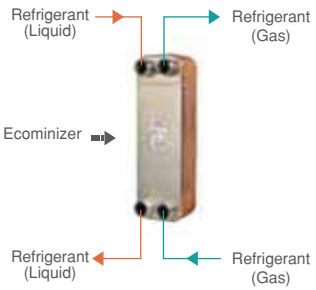

Ethylene Glycol Cooler

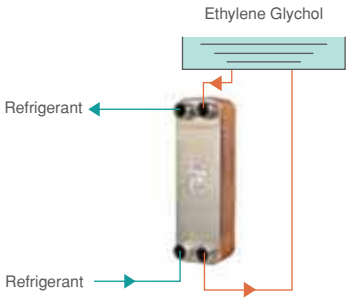

Pre Cooler

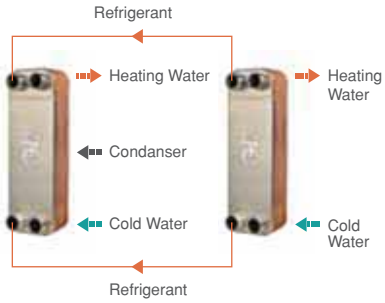

Cooling System Circuit (Refrigerant)

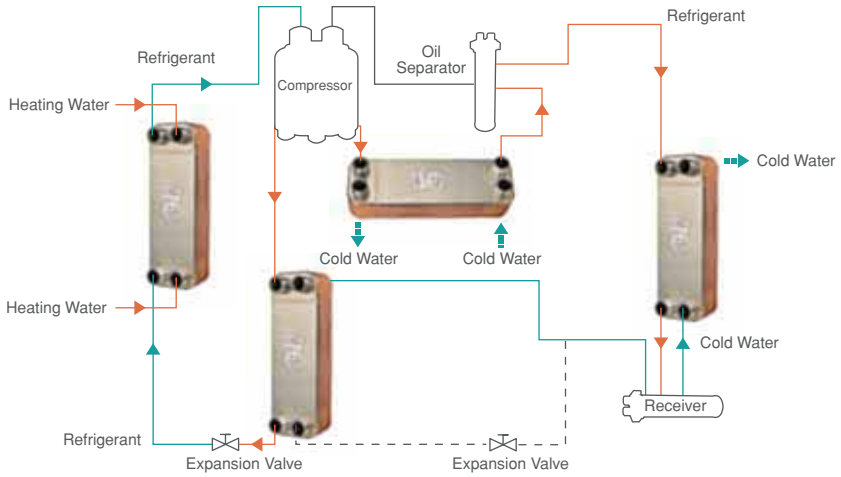

Air-Drying Cooler

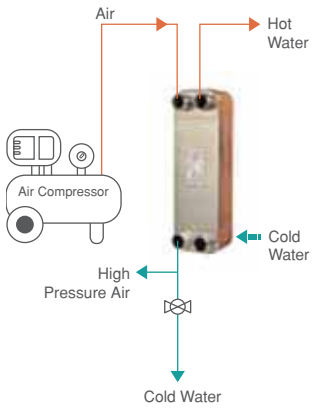

Hot Loop Dried Circuit

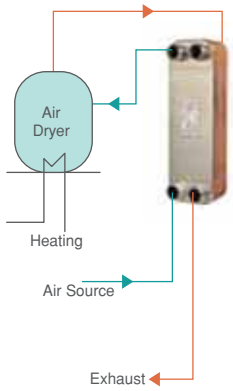

Electrolysis Process Circuit

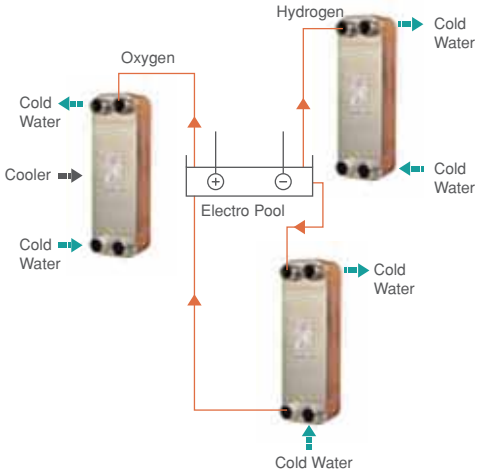

Domestic Hot Water or Heating System

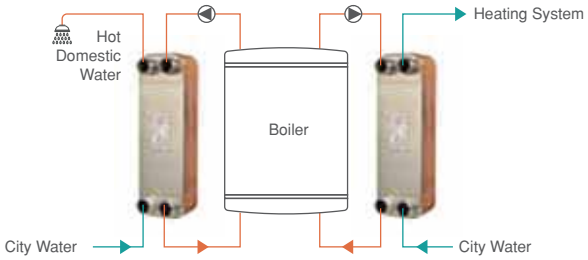

Domestic Hot Water System With Steam

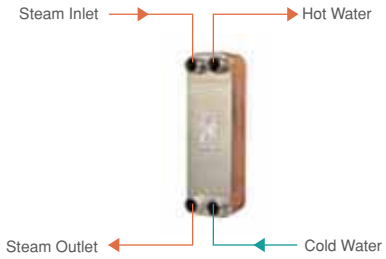

Domestic Hot Water System With Steam

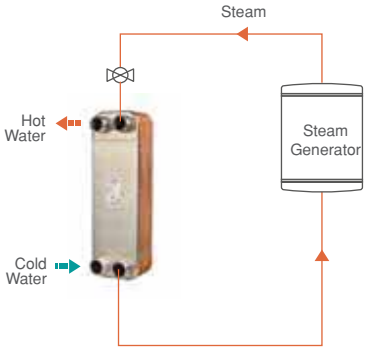

Immobilization

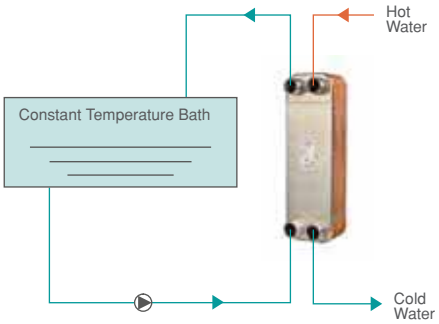

Heat Recovery (Compressor)

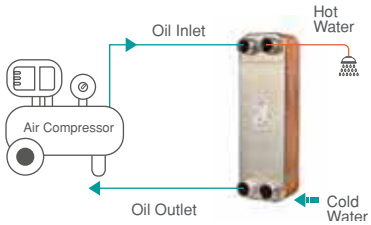

Oil Cooling Applications

MIT MB Series Plate Heat Exchangers

Definition
The heat exchangers are installed between two fluids for heat exchange. Plate heat exchangers are high performance components with a light and compact structure combined with a high level of efficiency. Their efficiency reduces the amount of cooling water required for heat transfer, resulting in reduced operating costs.

Features
The plates and connections are made of stainless steel in accordance with AISI 316, vacuum welding with 1.4401 copper. Special design plates that provide turbulent flow required for effective heat transfer have high mechanical strength.

Operating Details
Media:
- Water Glycol (Coolant)
- Operation Fluid
- Water
- Oil

Contamination:
The number of solid particles should be less than 10 mg per liter. Particle size <0.6 mm. (spherical) Fiber-like particles can cause rapid pressure drop.

Temperature range:
- -196 °C - 200 °C
  (Consider freezing point and boiling point.)

Pressure:
- Max. 257 °F (125 °C) with 49 psi (3 bar) (Static)
- Max. 435 °F (225 °C) with 435 psi (30 bar) (Static)
- Test Pressure: 650 psi

Hydraulic Symbol

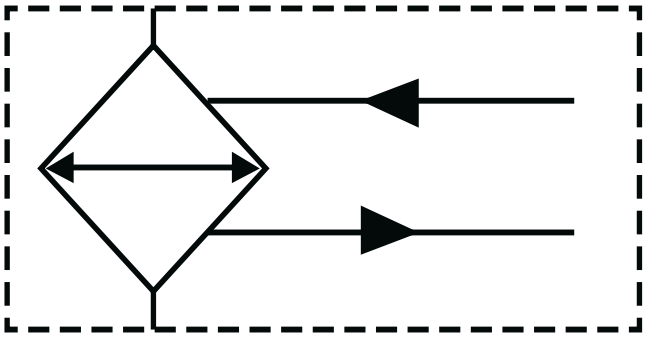

Bypass option of AIB Cooling element for high viscosity applications.

Corrosion
At pH 7, refer to the following limits;
- chlorine-free, CL2 <0.5 ppm
- chlorine ion, CL
  < 700 ppm (at 20 °C)
  < 200 ppm (at 50 °C)

Other Limits
- pH 7 - 10
- Sulfate SO4 2-< 100 ppm
- [H CO3 -] / [SO4 2 -] >1
- Ammonia, NH3 < 10 ppm

The following ions are not corrosive under normal conditions; Phosphate, nitrate, nitrite, iron, manganese, sodium and potassium.

Applications

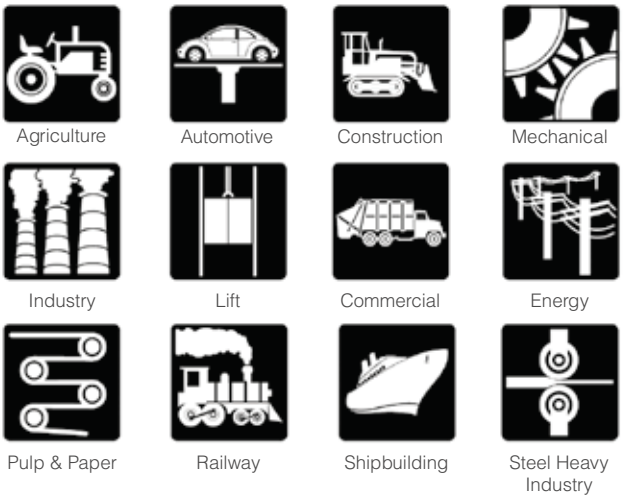

EKİN ENDÜSTRİYEL

HEAT TRANSFER PRODUCTS

SHELL&TUBE
HEAT EXCHANGERS

Shell & Tube Heat Exchangers

We design and manufacture products based on the project sent by our customers or according to customer requirements. Calculations, designs and projections according to customer demand and in accordance with **ASME Code Section VIII Div 1 and 2** (American Society Mechanical Engineers), **API 661, API 650** (American Petroleum Institute), **TEMA** (Tubular Exchanger Manufacturers Association), **AD-MERKBLAATTER, CODAT, DIN, EN 13445, PED 2014/68** / **AB** and **TSE**.

If the standards are not specified, we use ASME VIII Div 1 for pressure vessels and TEMA for heat exchangers and API 661 for radiators. At the same time, it is ensured that project controls and productions are carried out according to these standards.

In our projects, materials suitable for international codes are selected and all kinds of carbon steel, stainless steel and special coated steels and alloy materials including high strength quenched steels are used successfully. The welds and controls are also carried out by our welders who are certified to international standards by SMAW, TIG, MAG-MIG sources according to ASME IV and EN.

Services

MIT pipe heat exchangers are used in the public and private sectors of iron and steel, machinery industry, petroleum, petrochemical, gas, power plants, food, pharmaceutical, health, paper industry, leather, textile, air conditioning, ship and marine industrial facilities. in military, construction, swimming pool, geothermal and contracting sectors, in the areas of heating and cooling.

- Shell and Tube Heat Exchangers
- Shell and Tube Standard Heat Exchangers
- Serpentines
- Radiators
- Batteries
- Economizers
- Ship Towers
- Maintenance & Repair

Products are designed according to customer requirements. Ekin designs its heat exchangers by means of licensed computer programs.

The software used by MIT pipe heat exchanger engineers provide equipment design according to different international standards.

All parts to be manufactured by MIT can be modeled in 3D in computer environment. The type of process required for machining of modeled parts in CNC vertical machining center, selection of tool paths, process sequence etc. are programmed in computer environment. With computerized simulation of complex parts, possible errors can be detected before being processed on the machine.

Due to the sectors we serve, every material we use in our manufacturing should be of the highest quality.

Today, many materials are frequently used in heat exchangers and pressure vessels, such as;

- ASME SA516 Gr 70
- ASME SA106 Gr B
- ASME SA105
- ASME SA387
- ASME SA179
- ASME SA213
- CuZn28Pb1
- P265
- P335
- ASME SA266
- ASME SA182
- St35.8
- Duplex
- Super Duplex
- Monel

are still imported from abroad.

Our company realizes the importation of materials from many countries from Europe to the Far East according to the need. All materials used in our workshop are used in accordance with EN 10204 3.1 and / or ASME standards and, if necessary, are checked by neutral inspection organizations and used as original certified. Input quality control reports are prepared for each material used in our projects.

Different tests can be applied according to the necessity of manufacturing in our workshop. While some of these tests are carried out by MIT quality control engineers, some of them can be done by neutral control organizations.

In our workshop, quality file is produced for every equipment manufactured. Regarding the produced equipments; manufacturing program, mechanical design reports, manufacturing technical drawings, quality-control plan, NDT test reports, material certificates, dimension-size control reports, material input quality control reports, welding process specifications (WPS), welding test reports (PQR), welder certificates (WPQ), compliance reports etc. are presented to our customers in a transparent manner.

The ID files of the equipment and the quality files are prepared and shared with each customer.

Operation and Maintenance Of Sheel & Tube Heat Exchangers

Even though they are long-lasting and smooth devices, they are exposed to some deformations and pollution caused by external factors. According to the systems used in certain periods of time, cleaning and maintenance are needed. A proper cleaning without proper chemicals may damage the pipes and require larger revisions to the heat exchanger. Therefore, it is very important that cleaning and maintenance are carried out by specialized teams.

MIT's expert staff provides cleaning, maintenance and repair services for each type of tube heat exchanger. Maintenance and cleaning processes are completed in the shortest possible time and delivered to your business in the first day's performance. In addition to cleaning, corroded and deformed inner tubes can be changed individually or in bundles depending on the structure of the tube heat exchanger. During this process, the pipe materials can be selected as desired.

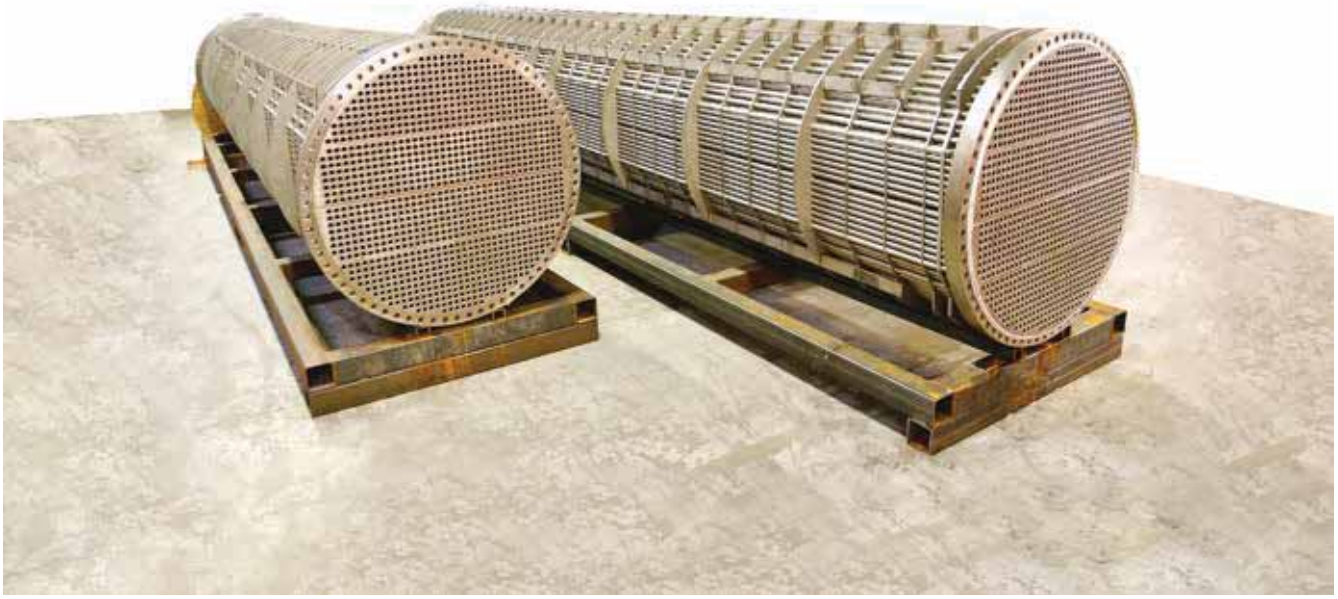

Caution

Please review this section carefully. The information contained in this manual covers the requirements for the installer and the user during installation, use and maintenance of the device. The use and maintenance of MIT-brand heat exchangers must be carried out in accordance with the guidelines in this manual. Otherwise, the responsibility will belong to the practitioner. The devices may only be used for the intended purpose. Non-objective uses can be dangerous. It is the responsibility of the user to interfere with the device and to use the original spare parts except for the authorized MIT authorized services.

Installation Instructions

- The tube bundle must be mounted in the heat exchanger chamber so that the serpentine can be disassembled and removed in the detachable serpentine heat exchangers.
- When the heat exchanger is put into operation, first the cold fluid and then the hot fluid should be put into operation in a suitable way and the air inside the device must be drained.
- When the heat exchanger is to be shut down the hot fluid must then be disconnected from the cold fluid.
- The heat exchanger inlet water (heated fluid) should be filtered.
- The heat exchanger must be supplied with soft water to feed the boilers producing the heating fluid to prevent calcification.
- The heat exchanger must be inserted and cleaned periodically.
- Check that the devices on the heat exchanger are intact (thermometers, valves, thermostatic valves, condensate, etc.) which are defective should be repaired or replaced.
- The heat exchanger should be opened every year and the coils should be cleaned.
- The dismantled flange seals must be kept firm and clean, and the bolts tightened properly.

Maintenance and Repair

- Check that the luminaires on the heat exchanger installation are intact.
- The heat exchanger should be opened once a month by opening the drain valve and cleaning of the deposited deposits at the bottom.
- The heat exchanger should be serviced once a year.
- When water quality is not suitable (hardness degree, hard water and very hard water) and at high temperatures, maintenance is more convenient.
- The following operations are performed during maintenance.
  - The hot water circuit is operated. Circuit and hot water production are controlled.
  - Check whether there is a water leak from the device or connections.
  - Check the safety valve.
  - Check whether the device temperature gauge is working or not.
- During maintenance, the drain valve is removed and the water inside the device is drained. During draining, drainage of the device should be connected with an expense and water supply to the boiler room should be prevented.
- Check the device for any residue. If there is a residue, the cleaning flange of the appliance is opened and cleaned by holding pressurized water.

MIT authorized services are recommended for maintenance and repairs. Our company isn't responsible for unauthorized applications. It is recommended to use original spare parts for maintenance and repairs.

Shell & Tube Heat Exchangers

It is the most widely used heat exchanger in industrial facilities such as iron and steel, petroleum, petrochemical, gas, power plants, food, pharmaceuticals, leather, textiles, air conditioning, ships and maritime sectors.

The heat exchangers used in the industries can be used in all sectors where there is a second alternative energy requirement from an alternative energy.

Shell &Tube Heat Exchanger Components;

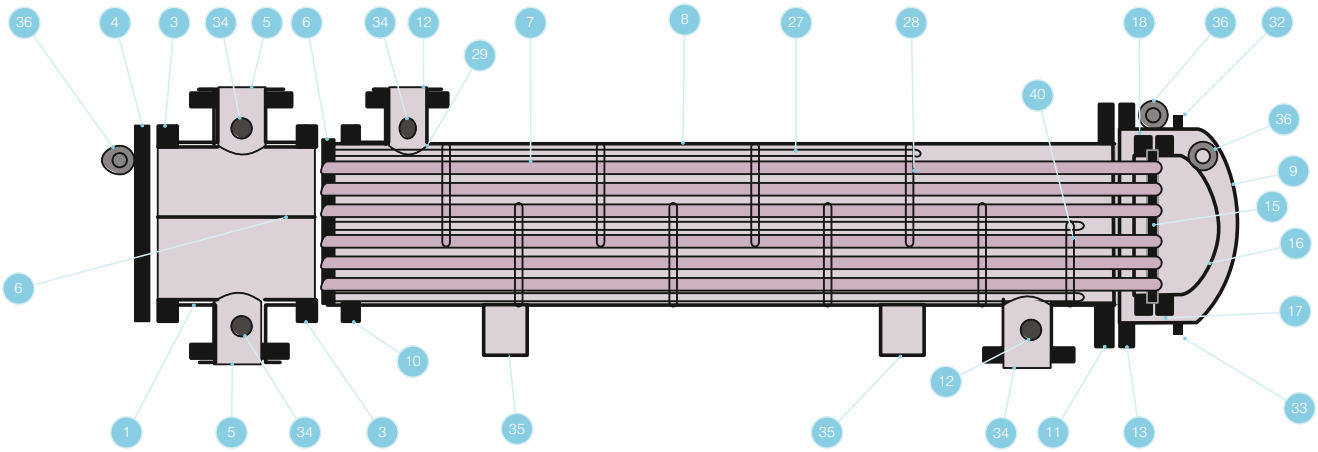

1	Fixed Head-Channel	9	Body Cover	17	Floating Head Flange	25	Packing Seal Ring	33	Unloading Connection
2	Fixed Head-Nozzle	10	Body Flange-Fixed Front Side	18	Floating Head Rear Assembly	26	Flashlight Ring	34	Measuring Instrument Connection
3	Fixed Head, Flanged Channel	11	Body Flange - Rear Side	19	Segment	27	Connecting Rods and Gaps	35	Support
4	Channel Cover	12	Body Inlet	20	Rear Flange	28	Suppression or Support Plates	36	Lifting Ring
5	Fixed Head Inlet	13	Body Cover Flange	21	Floating Head Cover	29	Inlet Surge Board (Curtain)	37	Support
6	Fixed Tube Mirror	14	Expansion Connection	22	Floating Tube Mirror Shirt	30	Longitudinal Surveillance Plate (Curtain)	38	Sluice
7	Tubes	15	Floating Tube Miror	23	Seal Box Flange	31	Chamber	39	Liquid Level Connection
8	Body	16	Floating Head Cover	24	Seal	32	Airing Connection		

Advantages of Shell & Tube Heat Exchangers;

- They can be designed and manufactured to operate at very high pressures.
- Highly flexible and robust design.
- They can be designed and manufactured to operate at very high and very low temperatures.
- They are resistant to thermal shocks.
- There is no size limitation.
- They can be used in all applications.
- Pressure losses are minimal and can be kept to a minimum in accordance with the process purpose.
- They can be easily dismantled and reassembled for maintenance, repair and cleaning.
- Maintenance and repairs are easy.
- Pipe diameter, pipe number, pipe length, pipe pitch and pipe arrangement can be changed. Therefore, the design of tube heat exchangers has a lot of flexibility.

TEMA Type Exchanger

STATIONARY HEAD TYPES

A

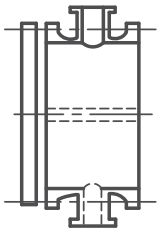

Removable Channel and Cover

B

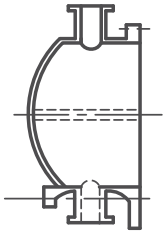

Bonnet (Integral Cover)

C

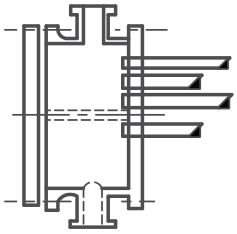

Integral With Tubesheet
Removable Cover

N

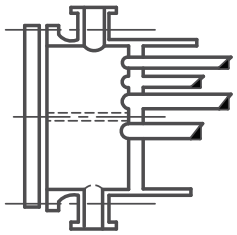

Channel Integral With Tubesheet
and Removable Cover

D

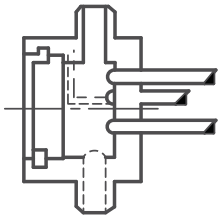

Special High-Pressure Closures

SHELL TYPES

E

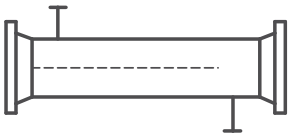

One-Pass Shell

F

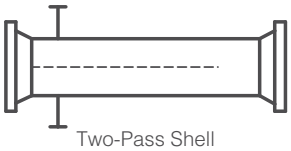

Two-Pass Shell
with Longitudinal Baffle

G

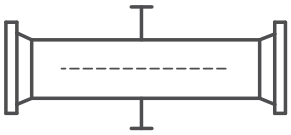

Split Flow

H

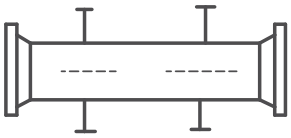

Double Split Flow

J

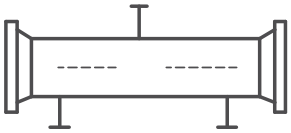

Divided Flow

K

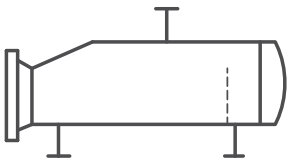

Kettle-Type Reboiler

X

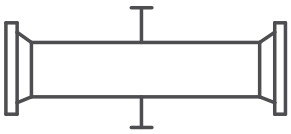

Cross Flow

REAR HEAD TYPES

L

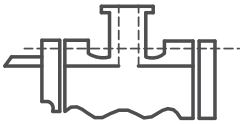

Fixed Tube Sheet
Like "A" Stationary Head

M

Fixed Tube Sheet
Like "B" Stationary Head

N

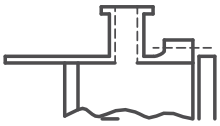

Fixed Tube Sheet
Like "C" Stationary Head

P

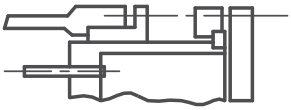

Outside Packed Floating Head

S

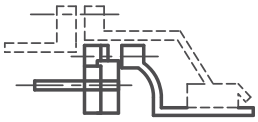

Floating Head with Backing Device

T

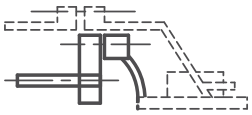

Pull-Through Floating Head

U

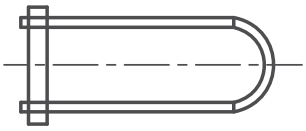

U-Tube Bundle

W

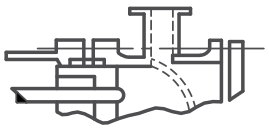

Externally Sealed
Floating Tubesheet

Shell & Tube Heat Exchangers

Heat transfer applications often require different solutions for different processes. After obtaining the necessary information in the process, it is designed by the expert engineers in the field and the schematic drawing is extracted. After the schematic drawing is checked, there is no dimensional problem and production pictures are taken.

Each heat exchanger approved for production is a process-specific heat exchanger, which is usually designed and which is similar. After the heat exchangers are manufactured, it is possible to isolate the heat losses to the minimum by isolating them if desired. There is no capacity limit in the production of pipe heat exchangers. Heat exchangers can be grouped in multiple ways by connecting in series or parallel and their capacities can be increased. Ekin, which provides the provision of facilities that require high capacities such as Petrochemical Plants and Power Plants, is one of the leading companies in the sector with its experience in this field.

U Shaped and Straight Shell &Tube Heat Exchangers

Customized and Hygienic Heat Exchangers

In some food and chemistry applications, heat treatments are carried out at very high temperatures or pressures. The use of plate heat exchangers at the mentioned temperatures and pressures is not used because the gasket temperature and pressure resistance is exceeded. For such applications, MIT engineers have developed a complete, hygienic tube heat exchangers. The temperature limit for these tube heat exchangers can be up to 350 °C. The welds in this type of heat exchanger must be made very precisely to ensure a smooth flow surface.

At the MIT production facility, such resources are implemented by certified welders and are examined by expert engineers in a 3-stage quality control phase. MIT engineers, who are experts on food processing processes, offer the most appropriate solutions during design, taking into account the capacity, location, type of food to be processed.

In high-pressure applications, as well as capacity calculations, material thicknesses are of vital importance in terms of welding technologies. Therefore, every heat exchanger produced at Ekin is kept under test for 1.5 hours at a pressure of 1.5 times the normal working pressure and is shipped if there is no problem in the test.

Tube in Tube Heat Exchangers

Usually used in food and sludge processes. The materials used are stainless in weight. In the case of chemical mixture in the sludge processes, material analysis is performed and material selection is made.

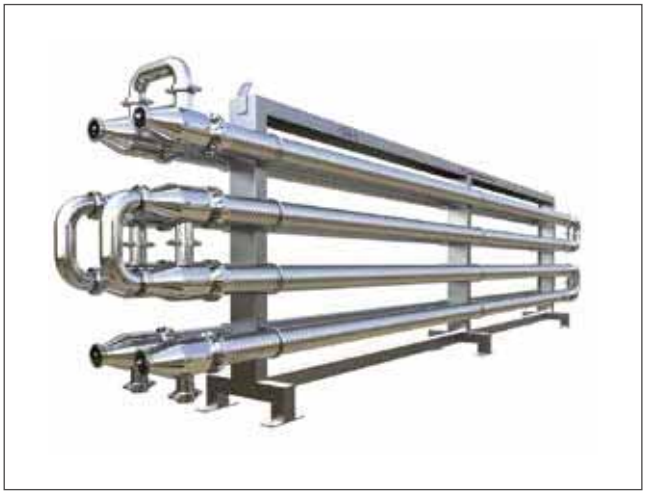

Double Tube Heat Exchangers

The preferred type of product for safety reasons is the double tube safe heat exchangers where the fluids are mixed with each other.

A possible leakage is reported by means of an electrical signal through a pressure switch or a float in the control chamber.

The double walled safety tubes in the tube bundle are heat transfer tubes with thin channels that create a leakage space after the two tubes are connected.

In addition to oil cooling systems, the transformer is also used in chemical process engineering, heat recovery, food processes and domestic hot water heaters.

Copper and copper alloys are generally preferred in the products, and carbon steel and stainless steel materials are used according to the processes.

Depending on the application and processing requirements, special designs are selected on the inner or outer pipe to ensure the best heat transfer and processing.

Oil Coolers

Many machines used in the industry need cooling during their work. The cooling process is usually caused by the collision of the water from the cooling tower or the chiller in the heat exchanger by the machine. MIT oil coolers can be used in all types of applications. Oil coolers can be manufactured as standard in certain dimensions and can be manufactured in special manufacturing processes.

Grooved Copper Tube Oil Heat Exchangers

In MIT oil coolers, internal pipes can be manufactured from grooved copper pipes and turbulent flow can be provided. In this way, heat transfer is much higher than standard flat tube heat exchangers. In standard products, the inner tubes are made of copper and the quality of all other equipments are manufactured as ST35.8.

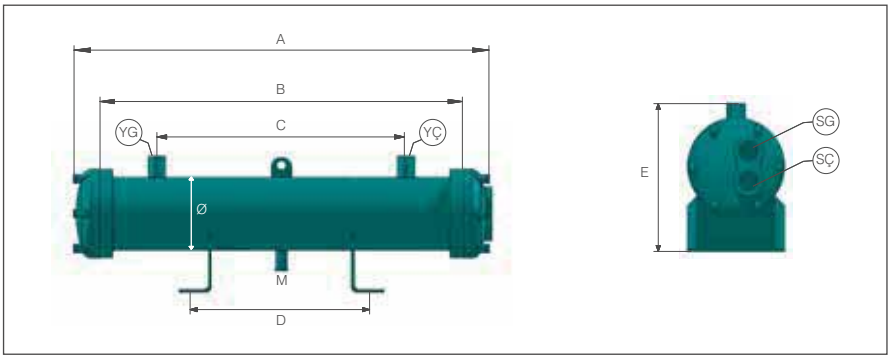

Model	Capacity (Kcal/h)	A (mm)	B (mm)	C (mm)	D (mm)	E (mm)	M (inch)	Ø (mm)	YG-YÇ (inch)	SG-SÇ (inch)	Weight (kg)
MIT.BYS.14.50	18100	590	500	340	340	252	G 1/2"	140	G 1"	G 1"	29
MIT.BYS.14.75	26400	840	750	550	500	252	G 1/2"	140	G 1"	G 1"	32,5
MIT.BYS.14.100	36300	1090	1000	800	650	252	G 1/2"	140	G 1"	G 1"	42
MIT.BYS.14.125	44500	1345	1250	1050	800	252	G 1/2"	140	G 1"	G 1"	45
MIT.BYS.16.50	21400	592	500	340	340	280	G 1/2"	168	G 1"	G 1"	32
MIT.BYS.16.75	34600	842	750	550	500	280	G 1/2"	168	G 1"	G 1"	40
MIT.BYS.16.100	44500	1092	1000	800	650	280	G 1/2"	168	G 1"	G 1"	49
MIT.BYS.16.125	56100	1342	1250	1050	800	298	G 1/2"	168	G 1"	G 1"	57
MIT.BYS.16.150	67600	1592	1500	1300	1000	292	G 1/2"	168	G 1"	G 1"	66
MIT.BYS.22.75	52800	850	750	550	500	349	G 1/2"	220	G 2"	G 2"	66
MIT.BYS.22.100	70900	1100	1000	800	650	349	G 1/2"	220	G 2"	G 2"	77,5
MIT.BYS.22.125	89100	1344	1250	1050	800	349	G 1/2"	220	G 2"	G 2"	89
MIT.BYS.22.150	107000	1594	1500	1300	1000	349	G 1/2"	220	G 2"	G 2"	100
MIT.BYS.22.175	125000	1844	1750	1550	1150	349	G 1/2"	220	G 2"	G 2"	111
MIT.BYS.22.200	143000	2094	2000	1780	1250	349	G 1/2"	220	G 2"	G 2"	123
MIT.BYS.22.250	179000	2594	2500	2280	1450	349	G 1/2"	220	G 2"	G 2"	146
MIT.BYS.25.75	92400	850	750	550	500	423	G 1/2"	273	G 2"	G 2"	89
MIT.BYS.25.100	123000	1100	1000	800	700	423	G 1/2"	273	G 2"	G 2"	128
MIT.BYS.25.125	165000	1350	1250	1050	800	423	G 1/2"	273	G 2"	G 2"	145
MIT.BYS.25.150	186000	1600	1500	1300	1000	423	G 1/2"	273	G 2"	G 2"	162
MIT.BYS.25.175	217000	1850	1750	1550	1150	423	G 1/2"	273	G 2"	G 2"	180
MIT.BYS.25.200	247000	2100	2000	1780	1250	423	G 1/2"	273	G 2"	G 2"	197
MIT.BYS.25.250	310000	2600	2500	2280	1450	423	G 1/2"	273	G 2"	G 2"	230
MIT.BYS.25.300	371000	3100	3000	2760	1700	423	G 1/2"	273	G 2"	G 2"	263

Shell And Tube Heat Exchangers With Finned Tube

The heat exchangers with flap heating surfaces, which are called laminated pipe heat exchangers, significantly increase the heat transfer between gases and liquids, saving space and are more efficient than flat pipes.

MIT laminated pipe heat exchanger is used in many different applications in industry. It allows heat transfer up to 1000 kW capacity.

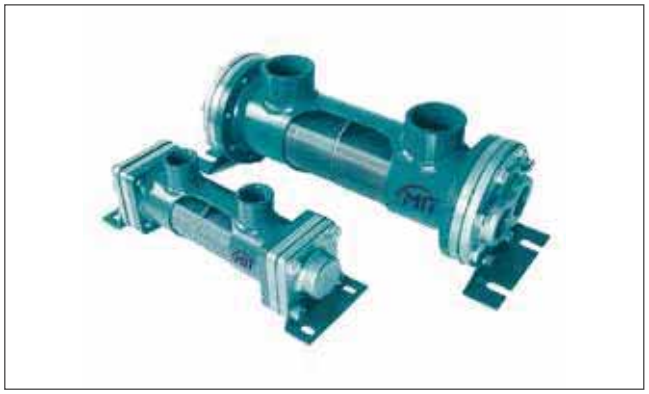

Advantages

- High heat transfer surface even in small products.
- Aluminum / copper fins that resist corrosion and increase the heat transfer area.
- Detachable cap and tube bundle make it possible to clean the heat exchanger.
- Product range suitable for high pressure resistance.
- More effective heat transfer thanks to copper or aluminum fins.

MIT Mor Series Tube Heat Exchangers

Most industrial machines needs to be cooled as they are operating.The cooling process is usually done by colliding the water coming from the cooling tower or chiller circuit with the hot oil coming from the machine side in the heat exchanger.

MIT Mor oil cooling exchangers are ideal for fluids such as hydraulic oils, heat transfer oils. Copper pipes used in our Mor series of products are 9mm in diameter and 0.6mm in wall thickness. Our models are coded according to fluid flow capacity in liters per minute. Our heat exchangers are of highest quality as we use the most durable materials for the newest designs. It is not affected by thermal stresses. Removable body covers are used in our products to allow the pipes to be cleaned mechanically.

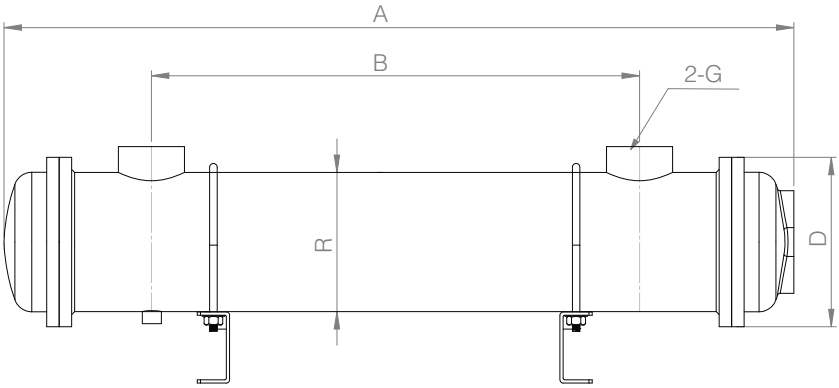

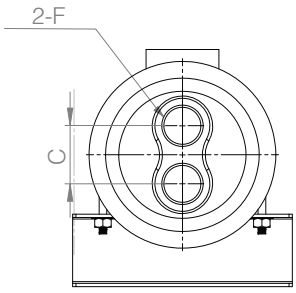

MOR SERIES TUBE HEAT EXCHANGER TECHNICAL SPECIFICATIONS												
Model	A	B	C	R	D	G	F	Flow	Tube Pieces	Pipe Diameter	Tube Thickness	Copper Surface Area
MOR-60	450	305	45	89	120	3/4"	3/4"	60	16	9Ø	0.6	0,35
MOR-100	555	370	68	114	150	3/4"	3/4"	100	20	9Ø	0.6	0,7
MOR-150	575	385	85	140	180	1 1/4"	1"	150	32	9Ø	0.6	1
MOR-250	780	585	85	140	180	1 1/4"	1"	250	32	9Ø	0.6	1,5
MOR-350	1180	990	90	140	180	1 1/4"	1"	350	32	9Ø	0.6	2,5
MOR-600	1175	950	90	165	200	2"	1 1/4"	600	48	9Ø	0.6	3
MOR-800	1700	1470	90	165	200	2"	1 1/4"	800	48	9Ø	0.6	4,3
MOR-1000	2140	1890	90	165	200	2"	1 1/4"	1000	48	9Ø	0.6	5,2
MOR-1200	2353	2270	90	165	200	2"	1 1/4"	1200	48	9Ø	0.6	6,5

In general, the set temperature of hydraulic systems is at 60 °C. Many hydraulic systems warn at 60 °C and above, and new generation machines automatically stop working.

When the oil temperature rises above 82 °C, the sealing elements in the hydraulic system are damaged and the aging of the oil accelerates. For this reason, it is necessary to avoid operating hydraulic systems with oil temperatures above 82 °C. The viscosity of the heated oil decreases and moves away from the optimum values required for the smooth operation of the systems. Oil loses its lubricating property.

To protect the oil and system, our MIT Purple series heat exchangers are the most suitable solution for the purpose. Appropriate heat exchanger selection is made by engineering studying and computer program according to the basic information below.

Oil type and viscosity at determined temperature: (cSt ...°C)
Oil flow: (l/min.)
Oil outlet temperature from heat exchanger: (°C)
Amount of heat to be discarded: (kW)
Current refrigerant water temperature: (°C)

In hydraulic press and plastic injection machines, the oil requirement to be transferred from the oil tank to the system is variable. In order to provide the necessary cooling; Tubular heat exchangers with a capacity suitable for the oil flow that needs to be cooled are used. MIT Purple series tube heat exchangers are designed as a solution to these needs and are standardized according to the amount of oil to be cooled in the machines.

MIT Purple series tube heat exchangers, produced under the quality and assurance of MIT, are produced with copper tube and carbon steel body. It is a superior engineering product with its advantages such as pipe-mirror joint provided by machine, designed according to the most efficient working principle, and providing ease of assembly and maintenance.

Stainless Steel and Titanium Pool Heat Exchangers

MIT tubular pool heat exchangers can be used in a wide range of systems such as solar pool heating systems or pool heating systems.

MIT pool heat exchangers ensure long life for all system components. Chlorine and its salt play an important role for the continuity of the systems by preventing the contact with the solar system or boiler directly.

MIT pool heat exchangers have been designed by Ekin engineers in an innovative way and their spiral and twisted design has increased the heat transfer efficiency to a high level. This also increases the thermal efficiency in the system.

MIT pool heat exchangers are designed to offer you the best solution with a wide range of capacities. These exchangers are perfect for pool, spa and similar applications.

Features

- High heat transfer efficiency.
- Soft and smooth tubes provide fast flow.
- Compact and advanced design.
- Wide range of usages.
- Different and large capacity sizes.

MIT pool heat exchangers are constructed from fully pressurized outer shell and threaded tubular inner tubes. Thus, the high flow rate within the heat exchanger is achieved, the heat exchanger is intended to be more durable, more efficient and cost effective.

The pool heat exchangers of Ekin have a large capacity to operate from a small spa to olympic pools. MIT pool heat exchangers from 15 kW up to 1750 kW provide the most appropriate and economical solution.

Advantages

- High efficiency coefficient 10000 W / m² °C, 5 or 6 times more efficiency than conventional heat exchangers.
- Compact design is 1/10 according to traditional products.
- Stainless steel and / or titanium material provides durability in corrosion and pressure factors.
- The connection design of the heat exchanger destroys the pressure on it.
- Compliance with ASME Standards VIII-1.
- Compact design.
- Easy installation and durability.

The MIT pool heat exchanger body and tubes are designed to operate at 205 °C and 1.3 MPa pressure. Body AISI 316L or titanium and tubes & connections can be selected from AISI 316L or titanium materials, depending on working conditions and chlorine content.

Model	Normal Capacity		Body Diameter (mm)	Body Lenght (mm)	Heat Transfer Area (m²)	Swimming Pool Capacity		Body (Pool) Inlet-Outlet Connection	Tube (Hot) Inlet-Outlet Connection
	kW	kBtu/Hr				m³	USGAL		
MIT-MS-16	16	55	60	360	0,15	18	4700	1"	3/4"
MIT-MS-25	25	85	60	520	0,25	28	7300	1"	3/4"
MIT-MS-45	45	155	76	450	0,33	50	13300	1 1/2"	1"
MIT-MS-61	61	210	76	570	0,44	68	18000	1 1/2"	1 1/2"
MIT-MS-88	88	300	76	780	0,64	98	25800	2"	1 1/2"
MIT-MT-105	105	360	89	830	0,85	120	31500	2"	1 1/2"
MIT-MS-175	175	600	114	900	1,55	200	52500	2 1/2"	2"
MIT-MS-352	352	1200	133	900	2,01	400	105600	2 1/2"	2"
MIT-MS-704	704	2400	168	950	4,47	800	211200	4"	2"
MIT-MS-880	880	3000	168	1100	5,3	1000	264000	4"	2 1/2"
MIT-MS-1056	1056	3600	168	1300	6,42	1200	316800	4"	2 1/2"
MIT-MS-1320	1320	4500	219	1070	8,46	1500	396000	4"	2 1/2"
MIT-MS-1467	1467	5000	219	1120	8,87	1660	439000	4"	2 1/2"
MIT-MS-1760	1760	6000	219	1220	10,64	2000	526800	4"	2 1/2"

! All of our pool heat exchangers are manufactured as AISI 316 or AISI 316Ti stainless steel.

Working Principle of MIT Sheel & Tube Heat Exchangers for Swimming Pools

MIT pool heat exchangers perform the heating / cooling process from the boiler / chiller by transferring water from the pool. The MIT pool heat exchangers prevent the passage of chlorine or any chemicals from the pool to the system, keeping the system and pool separate.

MIT pool heat exchangers ensure that the pool is healthy and long-lasting by keeping the materials that will harm the system. MIT pool heat exchangers are designed according to the size of the boiler or the size of the pool and the system to be used. The pool water with low temperatures allows the pool to heat evenly from the central boiler. MIT pool heat exchangers can be used in solar systems as well as boiler systems.

Housing Applications

- Floor Heating
- Pools
- Spas
- Domestic Water
- Solar Heating

Industrial Applications

- Oil Cooling
- Steam Condense
- Central Heating
- Motor Cooling
- Waste Water Heat Recovery

The MIT pool heat exchangers transfer heat from the heat source to the heat source by providing heat transfer with the cold water in the pond.

Boiler Pool Heating System

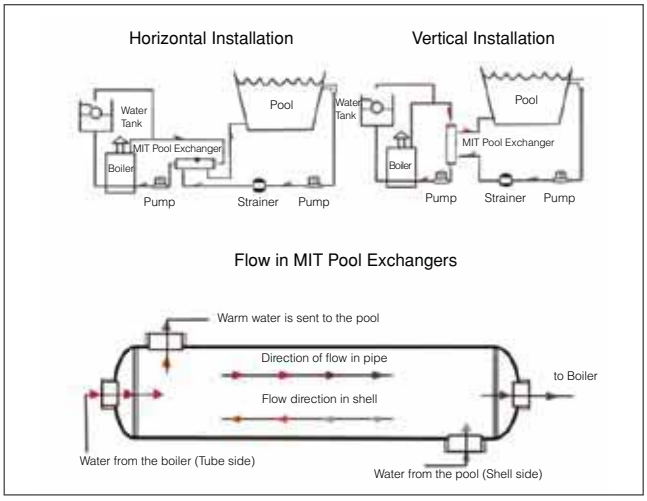

Solar Pool Heating System

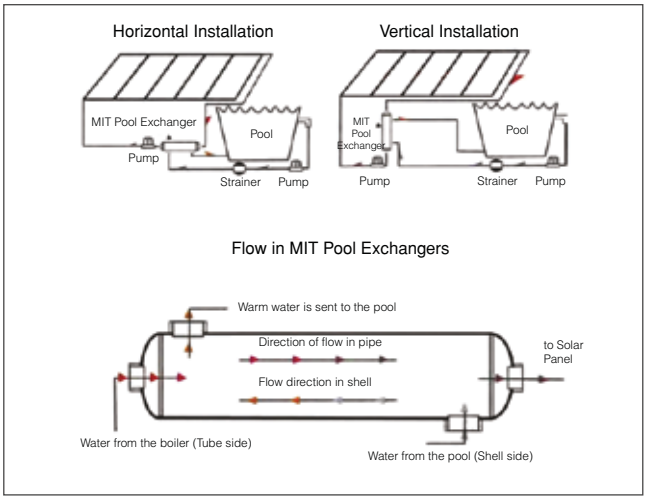

Vertical Pool Heat Exchanger Model

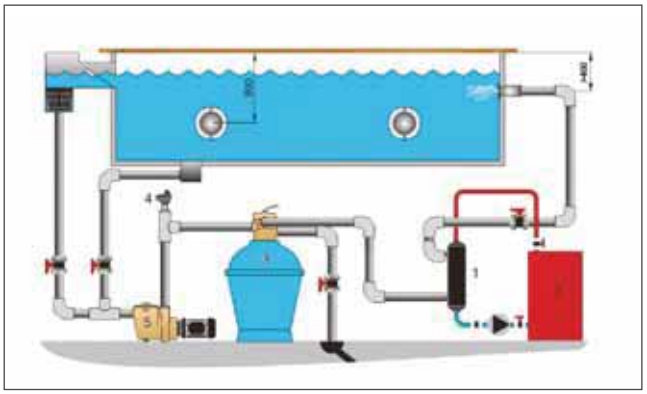

Horizontal Pool Heat Exchanger Model

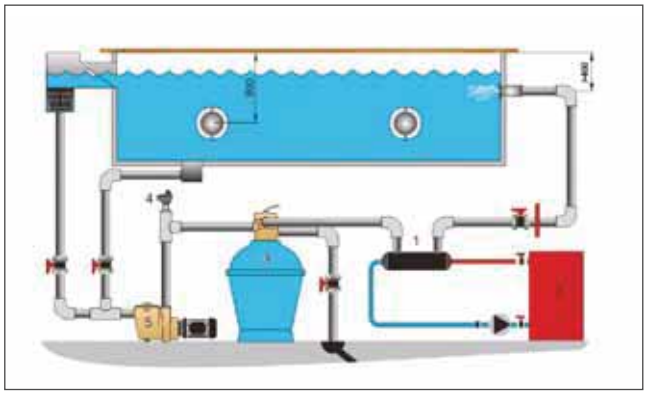

1	Tubular Pool Exchanger	3	Strainer	5	Pump
2	Boiler	4	Thermostate		

EKİN ENDÜSTRİYEL

HEAT TRANSFER PRODUCTS

EVAPORATORS AND **CONDENSERS**

Shell & Tube Evaporators

BE Type Evaporators

BE type evaporators have basic capacity and geometry options up to 1500 kW. They can be manufactured with 4 cooling circuits.

Appropriate refrigerants are all HFC and HCFCs. Special reverse flow and high heat transfer efficient evaporators are manufactured for R134A gas.

Disassembly of the tube bundle ensures maintenance and cleaning. Please contact us for special order products out of catalog.

Usage Areas of Sheel & Tube Evaporators

- Cooling Groups
- Ice Machines
- Marine Industry
- Ice Rinks

MIT-BE Single Circuit Evaporators

			20	30	40	50	60	70	80	100	135	145
Capacity	Q_w	kW	21	32	42	50	61	74	86	104	135	144
		Tons (RT)	6,0	9,1	12,0	14,2	17,4	21,1	24,5	29,6	38,5	41,0
Mass Flow Rate	WN	m^3/h	4	5	8	9	11	13	15	18	22	25
Pressure Drop	Δp	kPa	16	20	45	48	41	48	61	64	49	54
Refrigerant Fluid Volume	L		3,8	4,5	5,4	6,1	7,9	8,9	10,3	11,2	15,3	17,8
Water Volume	L		5,9	7,1	8,7	10,0	14,5	16,2	18,5	20,4	27,4	31,7

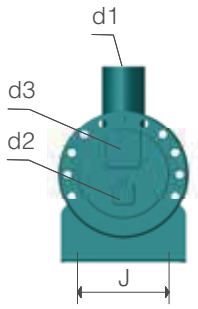

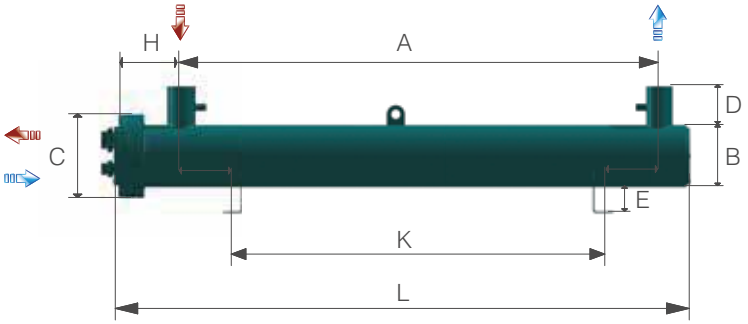

		20	30	40	50	60	70	80	100	135	145
Dimensions (mm)	L	865	1015	1215	1375	1285	1435	1635	1785	1830	2110
	A	660	810	1000	1160	1050	1200	1385	1535	1555	1835
	B	140	140	140	140	168	168	168	168	194	194
	C	195	195	195	195	245	245	245	245	260	260
	D	120	120	120	120	120	120	120	120	120	120
	E	80	80	80	80	80	80	80	80	80	80
	H	160	160	160	160	170	170	170	170	195	195
	J	117	117	117	117	147	147	147	147	180	180
	K	550	700	900	1060	910	1060	1260	1410	1200	1500
	d1	G 1 1/2	G 1 1/2	G 2	G 2	G 2 1/2	G 2 1/2	G 2 1/2	G 2 1/2	G 3	G 3
	d2	FL 22	FL 22	FL 22	FL 22	FL 22	FL 22	FL 22	FL 22	FL 35	FL 35
	d3	FL 35	FL 35	FL 35	FL 35	FL 42	FL 42	FL 42	FL 42	FL 54	FL 54
Weight	kg	40	43	49	53	69	74	81	85	112	125

R407C	Water Inlet Temperature	12 °C	Evaporation Temperature (DEW)	2,75 °C
	Water Outlet Temperature	7 °C	Condensation Temperature	45 °C
	Contamination Coefficient	0,000043 m^2 K/W	Extreme Temperature	4 K

MIT-BE Single Circuit Evaporators

			165	205	245	290	340	390	450	500	590
Capacity	Q_w	kW	162	202	242	295	345	395	450	515	585
		Tons (RT)	46,2	57,5	68,9	84,0	98,3	112,5	128,2	146,7	166,7
Mass Flow Rate	WN	m^3/h	28	35	42	50	59	68	77	88	99
Pressure Drop	Δp	kPa	53	35	54	28	50	34	36	39	54
Refrigerant Fluid Volume	L		19,7	26,5	30,0	36,9	41,7	47,8	56,5	64,3	72,8
Water Volume	L		34,7	47,5	53,6	98,5	93,0	85,9	139,8	130,8	121,0

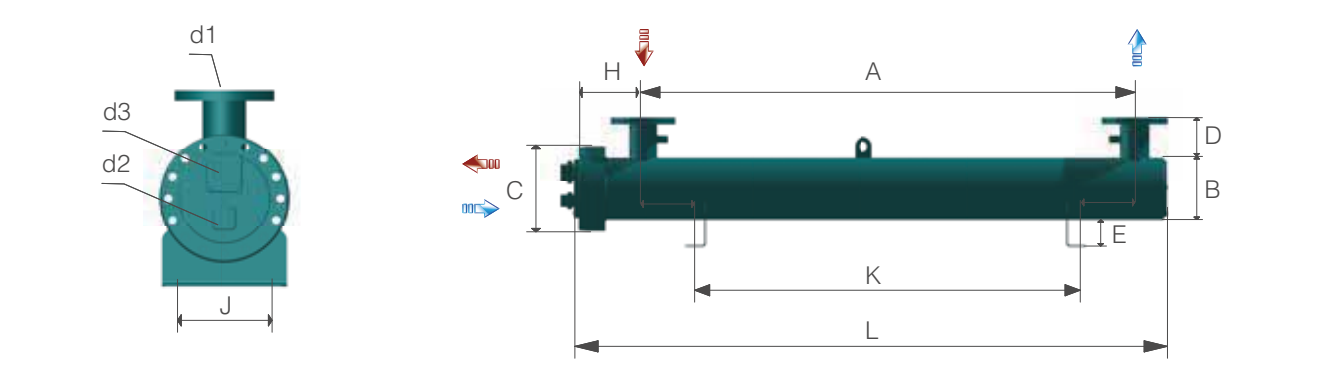

		165	205	245	290	340	390	450	500	590
Dimensions (mm)	L	2310	2340	2640	2670	2670	2670	2720	2720	2720
	A	2035	2000	2300	2270	2270	2270	2270	2270	2270
	B	194	219	219	273	273	273	324	324	324
	C	260	300	300	350	350	350	420	420	420
	D	120	150	150	150	150	150	150	150	150
	E	80	80	80	100	100	100	100	100	100
	H	195	225	225	255	255	255	285	285	285
	J	180	200	200	245	245	245	280	280	280
	K	1700	1800	2100	2100	2100	2100	2100	2100	2100
	d1	G 3	DN 100	DN 100	DN 125	DN 125	DN 125	DN 150	DN 150	DN 150
	d2	FL 35	FL 35	FL 35	FL 42	FL 42	FL 42	FL 42	FL 42	FL 42
	d3	FL 54	FL 80	FL 80	FL 80	FL 80	FL 80	FL 80	FL 80	FL 80
Weight	kg	134	167	176	230	237	245	308	320	337

R407C	Water Inlet Temperature	12 °C	Evaporation Temperature (DEW)	2,75 °C
	Water Outlet Temperature	7 °C	Condensation Temperature	45 °C
	Contamination Coefficient	0,000043 m^2 K/W	Extreme Temperature	4 K

MIT-BED Double Circuit Evaporators

			20	30	40	50	60	70	80	100	135	145	165	205	245
Capacity	Q_w	kW	21	32	42	50	61	74	86	104	135	144	162	202	242
		Tons (RT)	6,0	9,1	12,0	14,2	17,4	21,1	24,5	29,6	38,5	41,0	46,2	57,5	68,9
Mass Flow Rate	WN	m^3/h	4	5	8	9	11	13	15	18	22	25	28	35	42
Pressure Drop	Δp	kPa	16	20	45	48	41	48	61	64	49	54	53	35	54
Refrigerant Fluid Volume	L		3,8	4,5	5,4	6,1	7,9	8,9	10,3	11,2	15,3	17,8	19,7	26,5	30,0
Water Volume	L		5,9	7,1	8,7	10,0	14,5	16,2	18,5	20,4	27,4	31,7	34,7	47,5	53,6

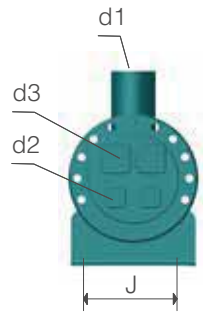

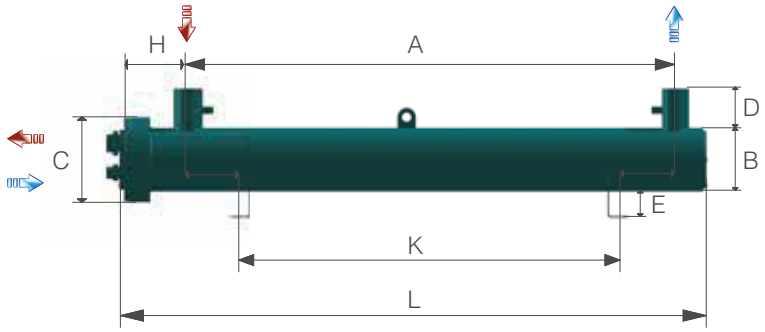

		20	30	40	50	60	70	80	100	135	145	165	205	245
Dimensions (mm)	L	865	1015	1215	1375	1285	1435	1635	1785	1830	2110	2310	2340	2640
	A	660	810	1000	1160	1050	1200	1385	1535	1555	1835	2035	2000	2300
	B	140	140	140	140	168	168	168	168	194	194	194	219	219
	C	195	195	195	195	245	245	245	245	260	260	260	300	300
	D	120	120	120	120	120	120	120	120	120	120	120	150	150
	E	80	80	80	80	80	80	80	80	80	80	80	80	80
	H	160	160	160	160	170	170	170	170	195	195	195	225	225
	J	117	117	117	117	147	147	147	147	180	180	180	200	200
	K	550	700	900	1060	910	1060	1260	1410	1200	1500	1700	1800	2100
	d1	G 1 1/2	G 1 1/2	G 2	G 2	G 2 1/2	G 2 1/2	G 2 1/2	G 2 1/2	G 3	G 3	G 3	DN 100	DN 100
	d2	FL 16	FL 16	FL 16	FL 16	FL 22	FL 22	FL 22	FL 22	FL 22	FL 22	FL 22	FL 35	FL 35
	d3	FL 28	FL 28	FL 28	FL 28	FL 35	FL 35	FL 35	FL 35	FL 42	FL 42	FL 42	FL 54	FL 54
Weight	kg	40	43	49	53	69	74	81	85	112	125	134	167	176

R407C	Water Inlet Temperature	12 °C	Evaporation Temperature (DEW)	2,75 °C
	Water Outlet Temperature	7 °C	Condensation Temperature	45 °C
	Contamination Coefficient	0,000043 m^2 K/W	Extreme Temperature	4 K

MIT-BED Double Circuit Evaporators

			290	340	390	450	500	590	660	770	920	1050	1150	1250	1350	1500
Capacity	Q_w	kW	295	345	395	450	515	585	665	775	900	1050	1150	1250	1350	1450
		Tons (RT)	84,0	98,3	112,5	128,2	146,7	166,7	189,5	220,8	256,4	299,1	327,6	356,1	384,6	413,1
Mass Flow Rate	WN	m^3/h	50	59	68	77	88	99	116	132	160	181	200	213	236	265
Pressure Drop	Δp	kPa	28	50	34	36	39	54	37	59	58	62	58	63	66	73
Refrigerant Fluid Volume	L		36,9	41,7	47,8	56,5	64,3	72,8	83,7	96,7	116,5	138,6	166,7	173,8	188,6	213,2
Water Volume	L		98,5	93,0	85,9	139,8	130,8	121,0	227,4	212,5	189,7	224,3	301,7	293,5	396,0	369,7

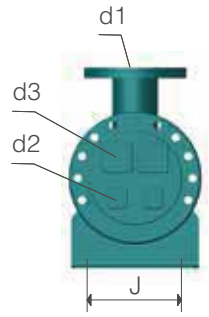

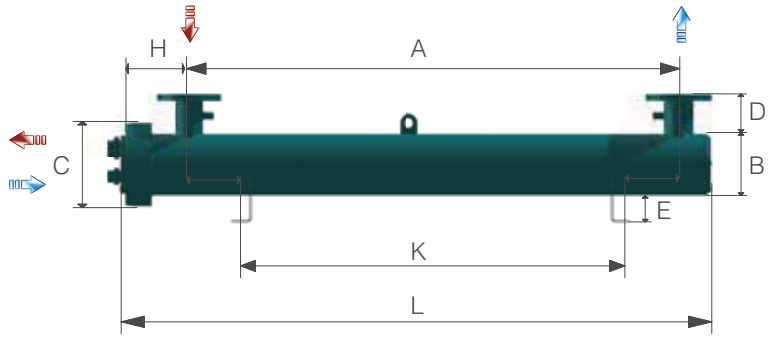

		290	340	390	450	500	590	660	770	920	1050	1150	1250	1350	1500
Dimensions (mm)	L	2670	2670	2670	2720	2720	2720	2750	2750	2750	3240	3275	3275	3285	3285
	A	2270	2270	2270	2270	2270	2270	2200	2200	2200	2700	2700	2700	2700	2700
	B	273	273	273	324	324	324	406	406	406	406	457	457	508	508
	C	350	350	350	420	420	420	510	510	510	510	570	570	620	620
	D	150	150	150	150	150	150	200	200	200	200	200	200	200	200
	E	100	100	100	100	100	100	100	100	100	100	100	100	100	100
	H	255	255	255	285	285	285	335	335	335	335	355	355	355	355
	J	245	245	245	280	280	280	370	370	370	370,0	420,0	420,0	470	470
	K	2100	2100	2100	2100	2100	2100	2000	2000	2000	2200	2200	2200	2200	2200
	d1	DN 125	DN 125	DN 125	DN 150	DN 150	DN 150	DN 200	DN 200	DN 200	DN 200	DN 200	DN 200	DN 200	DN 200
	d2	FL 42	FL 42	FL 42	FL 42	FL 42	FL 42	FL 42	FL 42	FL 42	FL 42	FL 54	FL 54	FL 54	FL 54
	d3	FL 67	FL 67	FL 67	FL 80	FL 80	FL 80	FL 80	FL 80	FL 80	FL 80	FL 105	FL 105	FL 105	FL 105
Weight	kg	230	237	245	308	320	337	510	528	554	621	740	749	840	873

R407C	Water Inlet Temperature	12 °C	EvaporationTemperature (DEW)	2,75 °C
	Water Outlet Temperature	7 °C	Condensation Temperature	45 °C
	Contamination Coefficient	0,000043 m^2 K/W	Extreme Temperature	4 K

Shell &Tube Condensers

BC Type Condencers

Ekin BC type condensers have basic capacity and geometry options up to 1800 kW. Suitable refrigerants are all HFCs and HCFCs.

With its special production BCM models that can be used in sea water, it makes its weight in the maritime sector. Connection type (flanged, threaded, welded, etc.) and diameters can be changed.

Please contact us for special order products out of catalog.

Usage Areas of Tubular Condensers

- Heating Pumps
- Cooling Groups
- Ice Machines
- Maritime Industry

MIT-BC Series Condensers

			20	35	45	55	65	65C	75C	90C	60	90
Capacity	Q_W	kW	22	33	42	51	58	65	79	94	60	81
		Tons (RT)	6,3	9,4	12,0	14,5	16,5	18,5	22,5	26,8	17,1	23,1
Mass Flow Rate	WN	m^3/h	3,5	6,1	7,8	9,5	11,2	10,4	12,9	15,6	11	15,6
Pressure Drop	Δp	kPa	16	29	30	33	31	57	65	73	19	22
Pass			4	4	4	4	4	4	4	4	2	2
Refrigerant Fluid Volume	L		6,3	5,6	9	8,2	7,5	13,2	12,1	11	20,3	18,8
Water Volume	L		3,5	4,1	4,8	5,5	6,2	6,3	7,3	8,2	7,0	8,4

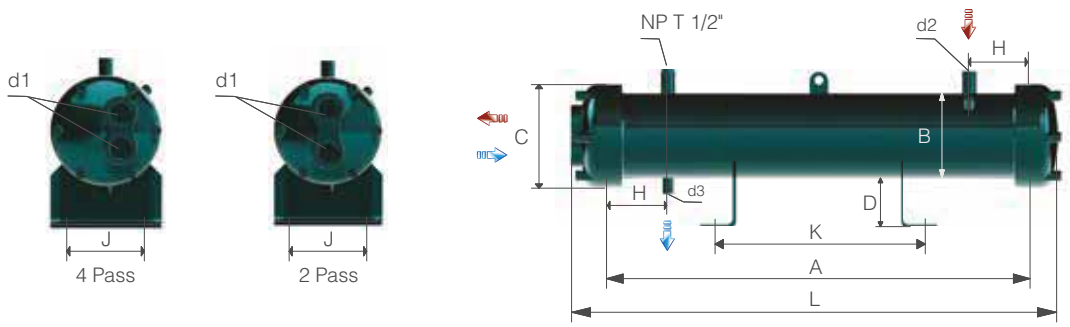

		20	35	45	55	65	65C	75C	90C	60	90
Dimensions (mm)	L	790	790	815	815	815	1115	1115	1115	1515	1515
	A	700	700	700	700	700	1000	1000	1000	1400	1400
	B	140	140	168	168	168	168	168	168	168	168
	C	170	170	200	200	200	200	200	200	200	200
	D	80	80	80	80	80	80	80	80	80	80
	H	100	100	100	100	100	100	100	100	100	100
	J	120	120	150	150	150	150	150	150	150	150
	K	350	350	350	350	350	500	500	500	700	700
	d1	G 1"	G 1"	G 1 1/2"	G 1 1/2"	G 1 1/2"	G 1 1/2"	G 1 1/2"	G 1 1/2"	G 2"	G 2"
	d2	W 22	W 22	W 28	W 28	W 28	W 28	W 28	W 28	W 35	W 35
	d3	W 16	W 16	W 22	W 22	W 22	W 22	W 22	W 22	W 28	W 28
Weight	kg	32	34	45	46	47	55	57	59	65	68

R407C	Water Inlet Temperature	28 °C	Condensation Temperature (DEW)	42 °C
	Water Outlet Temperature	33 °C	Extreme Cooling (Δt)	3 K
	Contamination Coefficient	0,000043 m^2 K/W		

MIT-BC Series Condensers

			100	120	130	145	165	180	200	220	245	265
Capacity	Q_W	kW	94	111	120	141	163	176	205	227	251	273
		Tons (RT)	26,8	31,6	34,2	40,2	46,4	50,1	58,4	64,7	71,5	77,8
Mass Flow Rate	WN	m^3/h	17,3	20,8	22,4	25,1	28,6	31,2	34,6	38,1	42,4	45,9
Pressure Drop	Δp	kPa	21	25	27	46	50	36	33	33	48	52
Pass			2	2	2	2	2	2	2	2	2	2
Refrigerant Fluid Volume	L		17,2	15,7	14,9	22,4	20,4	19,4	27	25	36,5	34,5
Water Volume	L		9,8	11,1	11,8	12,1	13,9	14,7	18,1	19,8	21,6	23,4

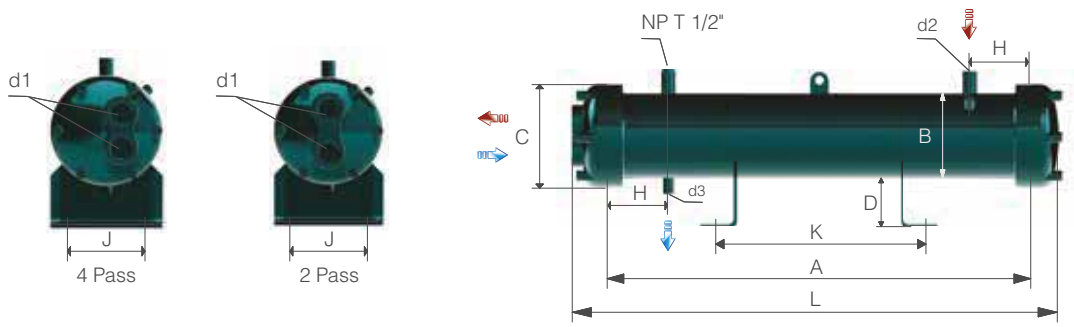

		100	120	130	145	165	180	200	220	245	265
Dimensions (mm)	L	1515	1515	1515	1915	1915	1915	1915	1915	1915	1915
	A	1400	1400	1400	1800	1800	1800	1800	1800	1800	1800
	B	168	168	168	168	168	168	194	194	219	219
	C	200	200	200	200	200	200	250	250	250	250
	D	80	80	80	80	80	80	80	80	80	80
	H	150	150	150	150	150	150	150	150	150	150
	J	150	150	150	150	150	150	180	180	200	200
	K	700	700	700	900	900	900	900	900	900	900
	d1	G 2"	G 2"	G 2"	G 2"	G 2"	G 2"	G 2 1/2"	G 2 1/2"	G 2 1/2"	G 2 1/2"
	d2	W 35	W 35	W 35	W 42	W 42	W 42	W 42	W 42	W 54	W 54
	d3	W 28	W 28	W 28	W 35	W 35	W 35	W 35	W 35	W 42	W 42
Weight	kg	71	73	75	85	89	91	124	128	139	143

R407C	Water Inlet Temperature	28 °C	Condensation Temperature (DEW)	42 °C
	Water Outlet Temperature	33 °C	Extreme Cooling (Δt)	3 K
	Contamination Coefficient	0,000043 m^2 K/W		

MIT-BC Series Condensers

			285	315	340	360	400	450	480	520	550	610
Capacity	Q_W	kW	295	321	345	380	424	472	498	557	596	649
		Tons (RT)	84,0	91,5	98,3	108,3	120,8	134,5	141,9	158,7	169,8	184,9
Mass Flow Rate	WN	m^3/h	49,3	54,2	58,8	62,3	69,2	77,9	83,2	90	95,2	106
Pressure Drop	Δp	kPa	55	42	59	44	48	55	37	37	38	43
Pass			2	2	2	2	2	2	2	2	2	2
Refrigerant Fluid Volume	L		32,5	64,9	63	59	55	51,1	89	83	79	75,1
Water Volume	L		25,1	28,1	29,8	33,3	36,8	40,4	44,6	49,9	53,4	57,0

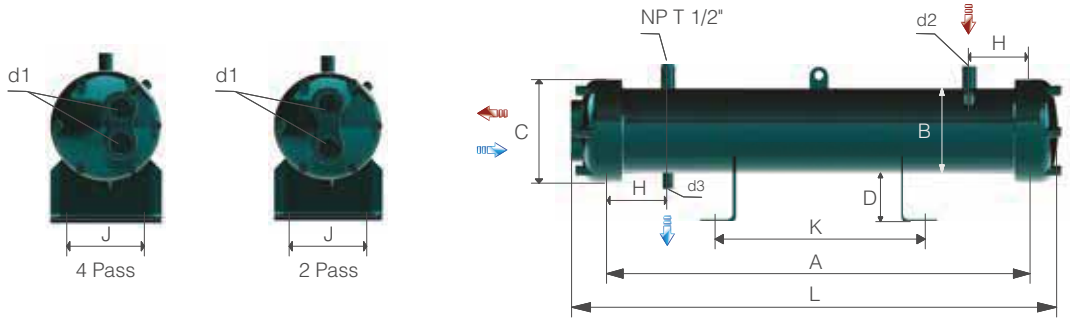

		285	315	340	360	400	450	480	520	550	610
Dimensions (mm)	L	1915	1925	1925	1925	1925	1925	1940	1940	1940	1940
	A	1800	1800	1800	1800	1800	1800	1800	1800	1800	1800
	B	219	273	273	273	273	273	324	324	324	324
	C	250	295	295	295	295	295	350	350	350	350
	D	80	100	100	100	100	100	100	100	100	100
	H	150	150	150	150	150	150	150	150	150	150
	J	180	240	240	240	240	240	280	280	280	280
	K	900	900	900	900	900	900	900	900	900	900
	d1	G 2 1/2"	G 3"	G 3"	G 3"	G 3"	G 3"	G 4"	G 4"	G 4"	G 4"
	d2	W 54	W 54	W 54	W 54	W 54	W 54	W 54	W 54	W 54	W 80
	d3	W 42	W 42	W 42	W 42	W 42	W 42	W 42	W 42	W 42	W 54
Weight	kg	147	181	185	193	201	208	248	259	267	274

R407C	Water Inlet Temperature	28 °C	Condensation Temperature (DEW)	42 °C
	Water Outlet Temperature	33 °C	Extreme Cooling (Δt)	3 K
	Contamination Coefficient	0,000043 m^2 K/W		

MIT-BC Series Condensers

			675	760	840	940	1040	1100	1220	1360	1520	1680
Capacity	Q_W	kW	702	793	867	1039	1178	1243	1350	1489	1670	1849
		Tons (RT)	200,0	225,9	247,0	296,0	335,6	354,1	384,6	424,2	475,8	526,8
Mass Flow Rate	WN	m^3/h	117	132	145	163	180	190	211	235	263	291
Pressure Drop	Δp	kPa	49	37	41	49	51	54	45	50	39	41
Pass			2	2	2	2	2	2	2	2	2	2
Refrigerant Fluid Volume	L		71,1	92,1	85,2	144	131,9	125,3	180,1	169,1	222,3	205,8
Water Volume	L		60,5	81,4	87,5	109,6	120,4	126,3	140,8	150,6	174,3	188,9

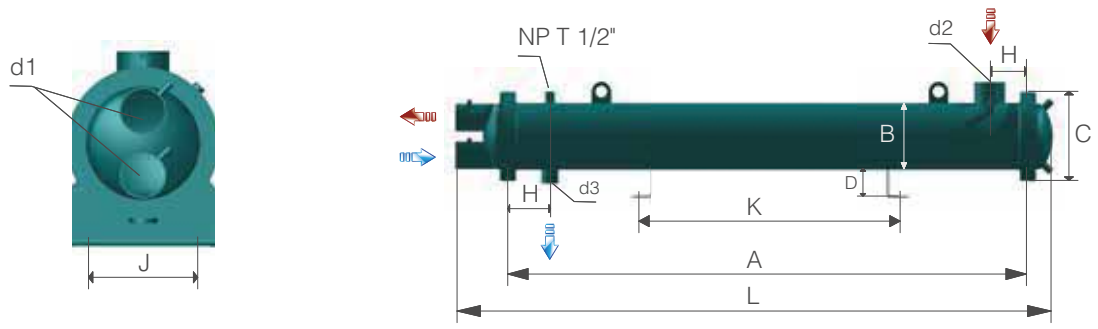

		675	760	840	940	1040	1100	1220	1360	1520	1680
Dimensions (mm)	L	1940	2175	2175	2415	2415	2415	2435	2435	2455	2455
	A	1800	1800	1800	2000	2000	2000	2000	2000	2000	2000
	B	324	356	356	406	406	406	457	457	508	508
	C	350	430	430	480	480	480	530	530	580	580
	D	100	100	100	100	100	100	100	100	100	100
	H	150	150	150	150	150	150	150	150	150	150
	J	280	320	320	370	370	370	420	420	470	470
	K	900	900	900	1000	1000	1000	1000	1000	1000	1000
	d1	G 4"	J 5"	J 5"	J 6"	J 6"	J 6"	J 6"	J 6"	J 6"	J 6"
	d2	W 80	W 80	W 80	W 80	W 80	W 80	W 100	W 100	W 100	W 100
	d3	W 54	W 54	W 54	W 54	W 54	W 54	W 80	W 80	W 80	W 80
Weight	kg	283	352	366	466	490	503	592	614	725	758

R407C	Water Inlet Temperature	28 °C	Condensation Temperature (DEW)	42 °C
	Water Outlet Temperature	33 °C	Extreme Cooling (Δt)	3 K
	Contamination Coefficient	0,000043 m^2 K/W		

EKİN ENDÜSTRİYEL

HEAT TRANSFER PRODUCTS

DC FAN DRIVEN
OIL COOLERS

Hydraulic Oil Cooler

In industrial applications, during the conversion of mechanical energy into pressure energy and pressure energy into work, some of the energy is released as heat energy and this released energy causes an increase in the hydraulic oil temperature.

Keeping the temperature of the oil at a certain level in order not to lose its lubricating property is important, therefore cooling the heated oils is necessary for the systems and other equipment to operate smoothly.

Although this cooling need can usually be solved with water or gas type heat exchangers, hydraulic oil coolers with fans come into play when there is no cooling water or a cooling gas.

Since hydraulic oil coolers are independent and mobile elements that do not need any infrastructure, they find more usage areas than water or gas oil coolers. Hydraulic oil coolers consist of a radiator, an AC, a DC or a hydraulic motor, a fan and a hood.

Parts of an Hydraulic Oil Cooler

Radiator: Consists of curved aluminum pipes for liquid to flow within

Hood: It is the connecting component that holds the radiator and fan motor together.

Fan: Spinning wings that blow or pull air.

Fan guard: It is the system that protects the fan.

Motor: It is the equipment that provides the fan movement; available in 12V DC, 24V DC, 220V AC, 380V AC or hydro-motor according to the needs of the installation.

Thermostat: Equipment that measures the oils temperature.

In hydraulic oil coolers, it is usually the air that is pulled from the environment to pass over the hydraulic oil and the oil is cooled. Ambient temperature is a very important parameter in determining the suitable hydraulic oil cooler. For this reason, the capacity calculation made by considering the most difficult conditions will result in the desired efficiency regardless of seasonal temperature variations.

Hydraulic oil coolers take up less space in the facility as they are small in size. Unlike heat exchanger systems, the initial investment costs are low as there is no need for additional installation and use of additional fixtures.

MIT engineers who are experts in their fields are ready for any support for appropriate product design using selection tables and special software. The engine also plays an important role in providing the required cooling.

Electric motors for hydraulic oil coolers are namely;
12 V or 24 V DC
230V AC monophase
230/400V AC 50/60 Hz three-phase and
hydro-motor.

Industrial Applications

Hydraulic oil coolers are used in various different applications around the world:

- Agricultural Machinery
- Street Cleaning Machines
- Hydrostatic Drives
- Elevators
- Compressors
- Construction Machinery
- Engine Oil Cooling
- Off-road Vehicles

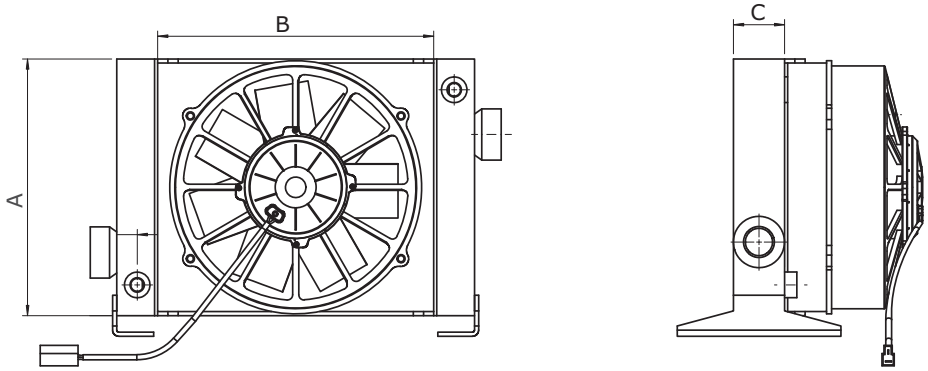

MIT HYDRAULIC OIL COOLER TECHNICAL SPECIFICATIONS							
Model	A (mm)	B (mm)	C (mm)	Max Flow l/min	Capacity kcal/h	Max Operating Pressure	Fan Motor Type
MIT.FYS.2020	300	245	63	100	6000	16 Bar	12/24V DC
MIT.FYS.2024	360	300	63	120	10000	16 Bar	12/24V DC
MIT.FYS.2030	425	375	63	140	12000	16 Bar	12/24V DC
MIT.FYS.2040	520	465	63	160	18000	16 Bar	12/24V DC
MIT.FYS.24	530	465	63	170	22000	16 Bar	12/24V DC
MIT.FYS.30	680	400	94	180	24000	16 Bar	12/24V DC
MIT.FYS.2050	650	550	63	200	25000	16 Bar	12/24V DC
MIT.FYS.36	780	550	94	220	30000	16 Bar	12/24V DC

MIT HYDRAULIC OIL COOLER TECHNICAL SPECIFICATIONS							
Model	A (mm)	B (mm)	C (mm)	Max Flow l/min	Capacity kcal/h	Max Operating Pressure	Fan Motor Type
MIT.FYS.2020-220	300	245	63	100	6000	16 Bar	220 V
MIT.FYS.2024-220	360	300	63	120	10000	16 Bar	220 V
MIT.FYS.2030-220	425	375	63	140	12000	16 Bar	220 V
MIT.FYS.2040-220	520	465	63	160	18000	16 Bar	220 V
MIT.FYS.24-220	530	400	94	170	22000	16 Bar	220 V
MIT.FYS.30-220	680	400	94	180	24000	16 Bar	220 V
MIT.FYS.2050-220	650	550	63	200	25000	16 Bar	220 V
MIT.FYS.36-220	780	550	94	220	30000	16 Bar	220 V
MIT.FYS.42-220	930	550	94	220	45000	16 Bar	220 V
MIT.FYS-50-220	930	660	113	280	56000	16 Bar	220 V
MIT.FYS.52-220	940	660	140	320	60000	16 Bar	220 V
MIT.FYS-9-220	1190	915	94	400	70000	16 Bar	220 V
MIT.FYS.10-220	1200	915	113	500	85000	16 Bar	220 V
MIT.FYS.11-220	1340	1200	140	600	150000	16 Bar	220 V

MIT HYDRAULIC OIL COOLER TECHNICAL SPECIFICATIONS							
Model	A (mm)	B (mm)	C (mm)	Max Flow l/min	Capacity kcal/h	Max Operating Pressure	Fan Motor Type
MIT.FYS.2024-380	360	300	63	120	10000	16 Bar	380 V
MIT.FYS.2030-380	425	375	63	140	12000	16 Bar	380 V
MIT.FYS.2040-380	520	465	63	160	18000	16 Bar	380 V
MIT.FYS.24-380	530	400	94	170	22000	16 Bar	380 V
MIT.FYS.30-380	680	400	94	180	24000	16 Bar	380 V
MIT.FYS.2050-380	650	550	63	200	25000	16 Bar	380 V
MIT.FYS.36-380	780	550	94	220	30000	16 Bar	380 V
MIT.FYS.42-380	930	550	94	220	45000	16 Bar	380 V
MIT.FYS-50-380	930	660	113	280	56000	16 Bar	380 V
MIT.FYS.52-380	940	660	140	320	60000	16 Bar	380 V
MIT.FYS-9-380	1190	915	94	400	70000	16 Bar	380 V
MIT.FYS.10-380	1200	915	94	500	85000	16 Bar	380 V
MIT.FYS.11-380	1340	1200	140	600	150000	16 Bar	380 V

MIT HYDRAULIC OIL COOLER TECHNICAL SPECIFICATIONS							
Model	A (mm)	B (mm)	C (mm)	Max Flow l/min	Capacity kcal/h	Max Operating Pressure	Fan Motor Type
MIT.FYS.2020-H	300	245	63	100	8000	16 Bar	Hydromotor
MIT.FYS.2024-H	360	300	63	120	12000	16 Bar	Hydromotor
MIT.FYS.2030-H	425	375	63	140	14000	16 Bar	Hydromotor
MIT.FYS.2040-H	520	465	63	160	20000	16 Bar	Hydromotor
MIT.FYS.24-H	530	400	94	170	22000	16 Bar	Hydromotor
MIT.FYS.30-H	680	400	94	180	27500	16 Bar	Hydromotor
MIT.FYS.2050-H	650	550	63	200	40000	16 Bar	Hydromotor
MIT.FYS.36-H	780	550	94	220	42000	16 Bar	Hydromotor
MIT.FYS.42-H	930	550	94	220	47000	16 Bar	Hydromotor
MIT.FYS-50-H	930	660	113	280	56000	16 Bar	Hydromotor
MIT.FYS.52-H	940	660	140	320	60000	16 Bar	Hydromotor
MIT.FYS-9-H	1190	915	94	400	70000	16 Bar	Hydromotor
MIT.FYS.10-H	1200	915	113	500	85000	16 Bar	Hydromotor
MIT.FYS.11-H	1340	1200	140	600	150000	16 Bar	Hydromotor

MIT FYS 2020

Performance diagram

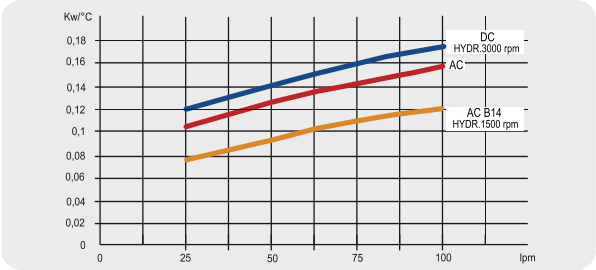

Pressure drop (ISO VG 32)

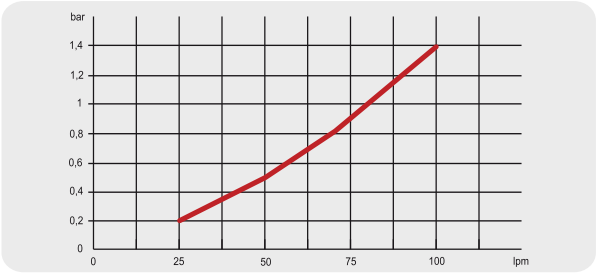

MIT FYS 2024

Performance diagram

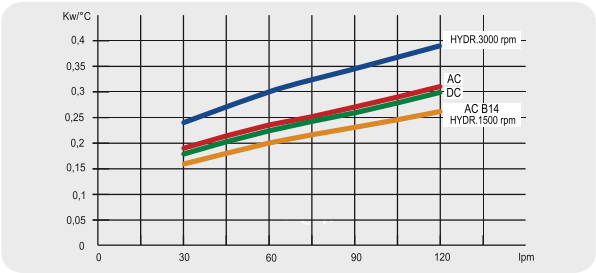

Pressure drop (ISO VG 32)

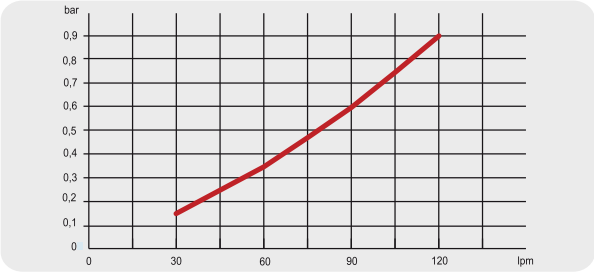

MIT FYS 2030

Performance diagram

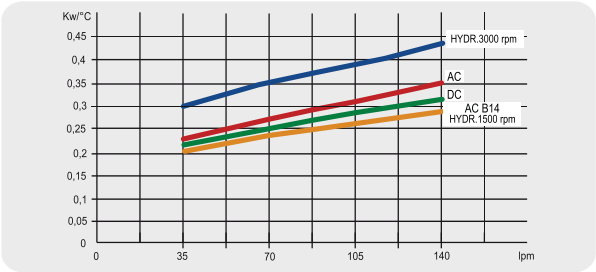

Pressure drop (ISO VG 32)

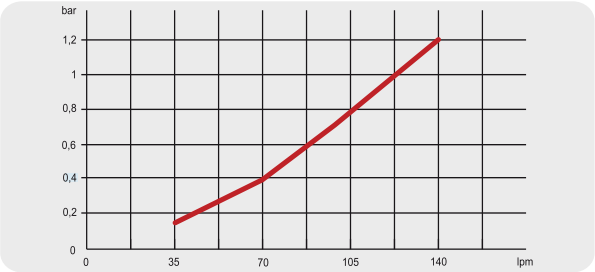

MIT FYS 2040

Performance diagram

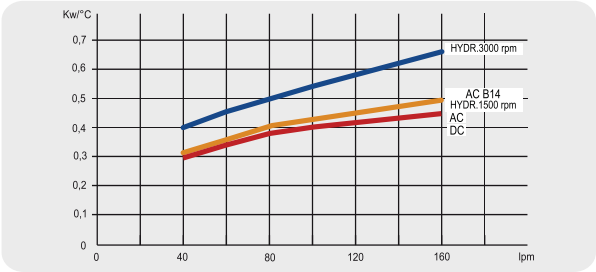

Pressure drop (ISO VG 32)

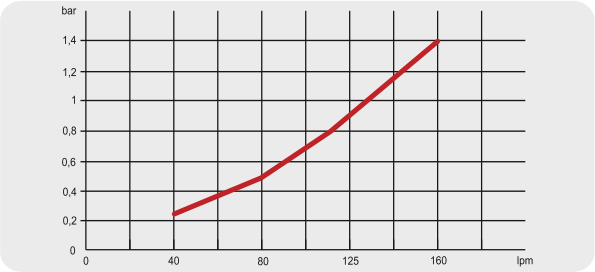

MIT FYS 2050

Performance diagram

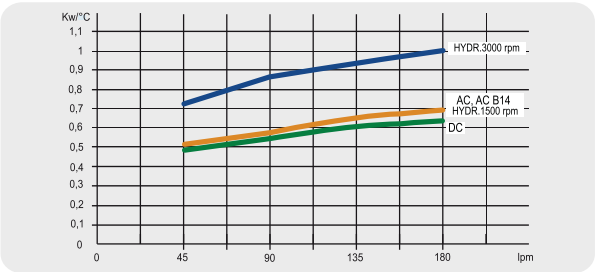

Pressure drop (ISO VG 32)

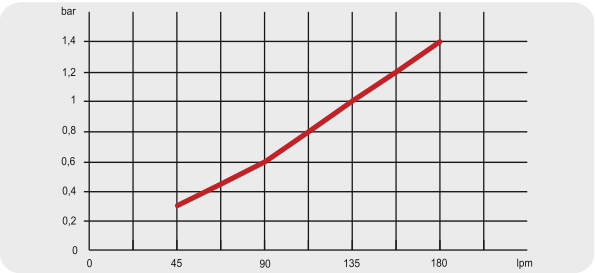

MIT FYS 24

Performance diagram

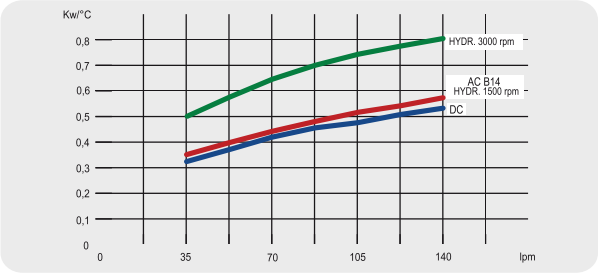

Pressure drop (ISO VG 32)

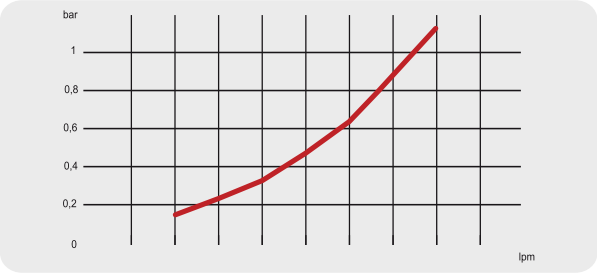

MIT FYS 30

Performance diagram

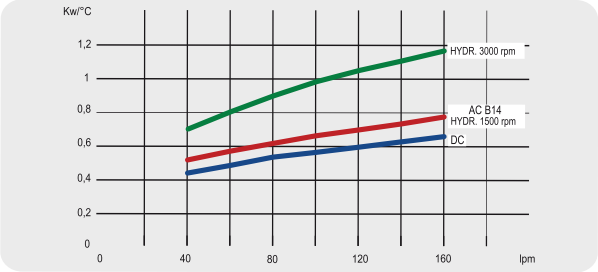

Pressure drop (ISO VG 32)

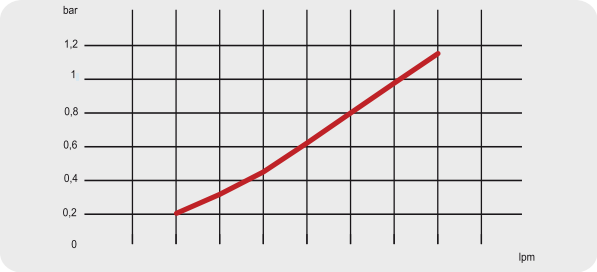

MIT FYS 36

Performance diagram

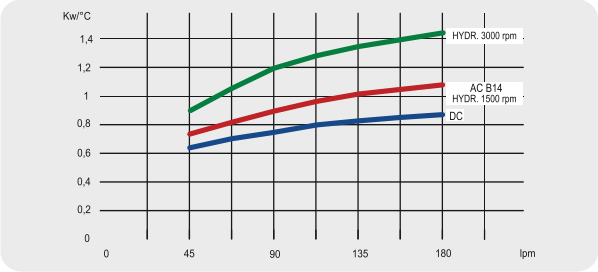

Pressure drop (ISO VG 32)

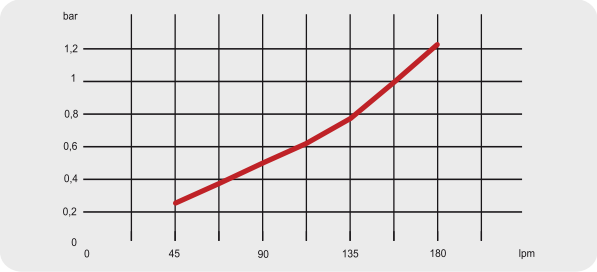

MIT FYS 42

Performance diagram

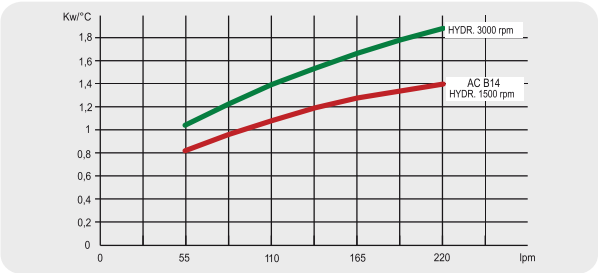

Pressure drop (ISO VG 32)

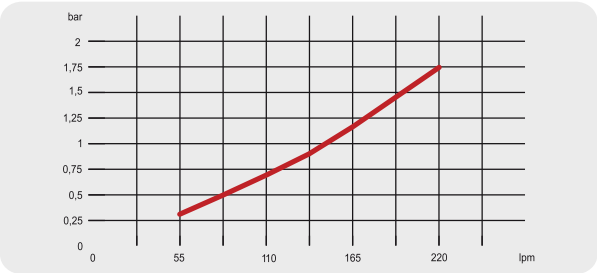

MIT FYS 50

Performance diagram

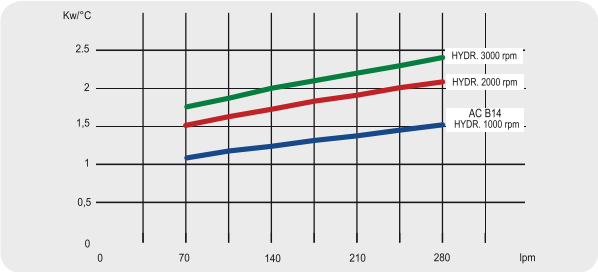

Pressure drop (ISO VG 32)

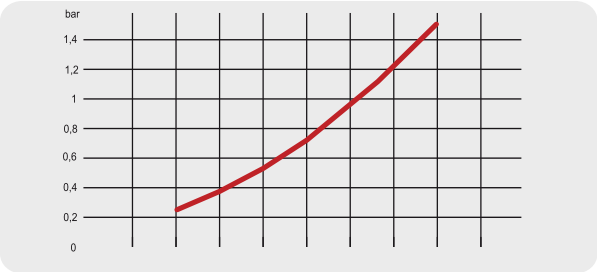

MIT FYS 52

Performance diagram

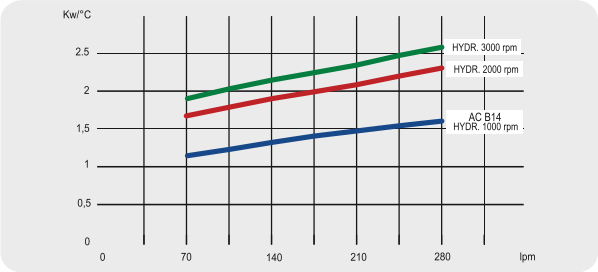

Pressure drop (ISO VG 32)

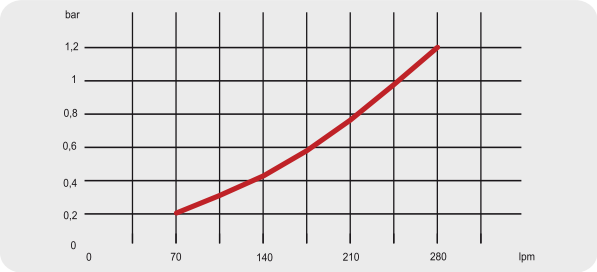

Choosing a Cooler

Calculation for the optimal cooler

In order to choose the right cooler, the following information is required.

- Q (kW) Required Heat Dissipation
- V (lt/m) Oil Flow
- Toil (°C) Oil Temperature Entering the Radiator
- Tair (°C) Ambient Temperature around the Radiator

Performance diagram

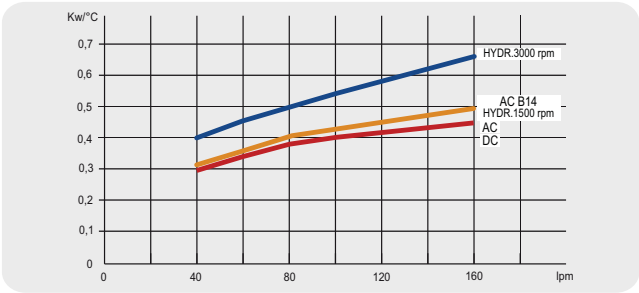

Example

Q : 13 kW
V : 125 lt/min
Toil : 60°C
Tair : 30°C

ΔT = 60 - 30 = 30°C
K=13 kW/30 °C = 0,4 3 kW/°C

The most suitable cooler is selected over the K and V values and the cooling performance graph. According to this calculation, the cooler with the code MIT FYS.2040 is selected.

Electrical Circuit

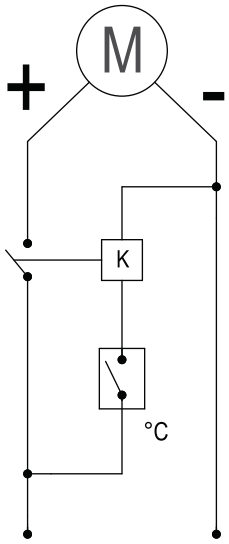

12-24V DC

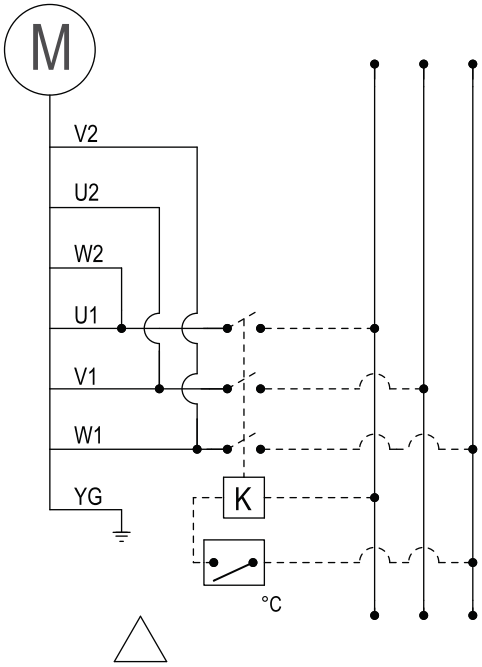

230V-280V AC 3 FAZ

°C = Thermostat
K = Relay

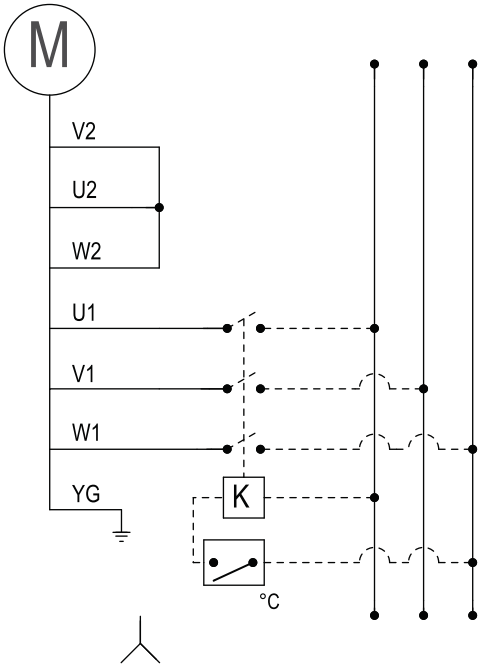

400V-480V AC 3 FAZ

°C = Thermostat
K = Relay

EKİN ENDÜSTRİYEL

HEAT COILS

Batteries

Water, steam and air conditioner batteries are produced in the desired size and capacity according to customer requirements. In order to select the product that best suits your needs in battery designs, the necessary calculations are performed using a special software program.

Water and Steam Batteries

Aluminum or epoxy coated aluminum or copper coverslips are used in batteries in flat or wavy surfaces. Cladding thicknesses vary from 0.12 mm to 0.20 mm depending on the need.

Copper tubes with diameters of 3/8", 1/2", 5/8"are used. After the fin is set, the machines are mechanically inflated in automatic machines to ensure full contact and thus heat transfer is maximized.

In steam coils, thick meat pipes resistant to high pressures such as 0.7 mm and 1 mm are used. Copper tubes are used in collectors of copper coils and steel pipes are used in collectors of hot and cold water coils. On request, the collector pipe can be made of stainless steel. Steel couplings are used as standard in collectors and brass fittings are used on request. All products are equipped with air and water purifiers and cuffs.

The number of pipes and rows is determined by considering the capacity value and pressure loss required by the customer. The optimum fit is selected by comparing pressure loss and capacity values. Unless otherwise stated, the batteries are tested in a pool filled with water at 40-45 °C with 20 bar pressure. After the test, the products are washed externally and dried.

Air Conditioning Evaporators and Condensers

Air conditioner condenser and evaporators are produced in desired size and capacity according to customer requirements. The production capacity and size are carried out according to the pictures, samples or data sent by the customer. Capacity and size calculations related to the products can be done precisely by the software program used. In the 3/8" tubular batteries 25x12.5 mm, 25x21.65 mm or 31.75x27.5 mm fin molds; 40x34.64 mm mold is used in 5/8 "tubular batteries.

If requested, production can be carried out in the form of a checkered form for the specified molds. All condenser and evaporator batteries are tested at a pressure of 35 bar and shipped with 3 bar nitrogen after testing.

If requested by the customer, the products are painted with electrostatic powder paint and the standard color RAL7038 is used.

DX Batteries

DDX Battery means using refrigerant with a compressor, loading the heat from the evaporator to the refrigerant and discharging it into the atmosphere (ie transferring heat from air to air). In doing so, the refrigerant is vaporized directly at the source (ie in the air handling unit) where the heat is to be transferred. A different fluid is not used when transferring heat such as other systems. In the case of heat transfer with conventional chillers, the heat is first transferred to the water and then transferred to the heat exchanger in the chiller, where it is transferred to the refrigerant. The heat transferred to the fluid is again thrown into the atmosphere with the help of the compressor.

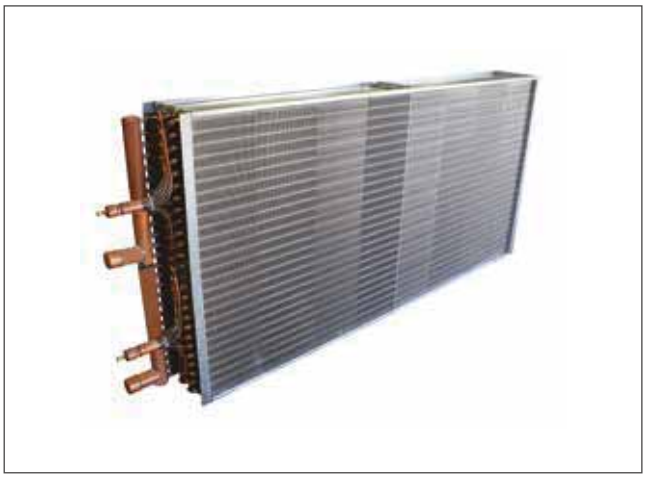

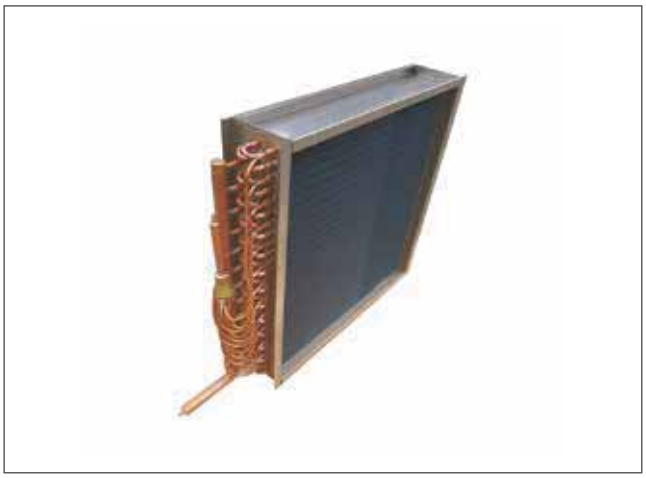

Unit Heaters

Unit heaters are ready to use heating units complete with a fan, shell and other auxiliary equipment that come pre built and can be used without needing any other equipment.

They are very economical heaters used for heating the environment with heating fluids such as steam, hot water and hot oil. Unit heater designs can be made from 5000 kcal/h to 80000 kcal/h capacity.

Unit heaters can be used as an economical and practical heater in large areas such as meeting rooms, gyms and factories. It is designed by using different materials and fan types according to the place of use and the steam pressures in the system, such as tube and shell heat exchangers in the unit heaters. For example, in applications up to 1-3 bar saturated steam pressure, standard thickness copper pipes can be used in the heater unit coils, while in systems with 3-4 bar steam pressure, thicker copper pipes are preferred, and steel pipe radiators are preferred at 4 bar and higher pressures.

Ceiling mounted unit heaters with an axial fan should be preferred in places such as meeting and conference halls where the area to be heated is between 2-4 meters high and where silence is important. Radial fan appliances with high blowing capacity should be preferred in places that are higher than 4 meters and have a large area to be heated, such as factories.

The battery designed for the intended use is the equipment that provides heat transfer from the hot fluid. Allows transfer of heat to the environment by pushing the air through the battery. It is the shell that keeps the battery and the fan together. They are adjustable louvers that direct the heated air in the desired direction.

Parts of the Unit Heater:

1. Battery
2. Radial / Axial Fan
3. Cabin
4. Router Wings

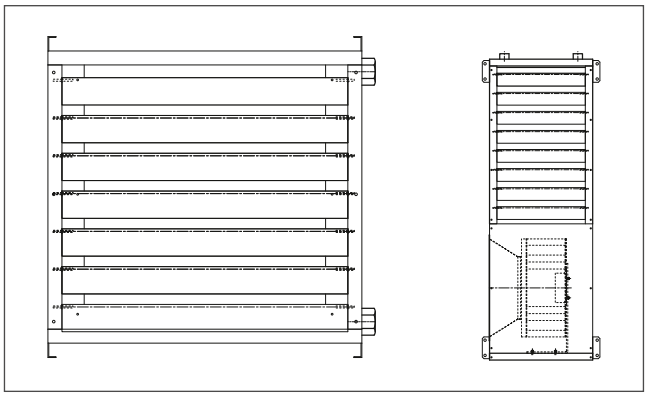

Battery

The battery pipe material and thickness for the unit heaters are designed according to the temperature and pressure values at which the system will operate. For hot water systems, aluminum finned coils with copper pipes are used; steel pipes are used in systems containing hot water and steam. Aluminum plates used around the pipes provide the most effective heat transfer by increasing the heat transfer surface area.

Fan

The fans, which are at least as important as the battery in the unit heaters, are determined according to the wall or ceiling type of the unit heater. While radial fans are preferred in wall-mounted unit heaters, axial fans are used in ceiling-mounted unit heaters.

Cabin

It is the body that holds the coil and the fan together and is made of HRP or stainless steel sheet, depending on the place of use. With electrostatic powder paint, a perfect surface resistant to corrosion and abrasion is obtained.

Router Wings

They are air adjustment louvers which are used to maximize the blowing distance in the unit heaters used and to direct the air as desired. Air flow directed upwards or downwards according to the usage preference provides maximum comfort.

MIT Hot Water Unit Heaters

Hot Water Unit Heaters with Radial Fans

Model	Air Flow	Inlet Air	Hot Water Capacity Kcal/H						
	m^3/H	°C	B1	S	S	S	S	S	S
			110/80 °C	90/70 °C	80/60 °C	70/50 °C	60/40°C	50/30°C	45/40 °C
MIT.S.D.A.6kW	1050	18	7600	6200	4800	3100	1700	950	2500
		15	8000	6600	5200	3600	1900	1200	2950
		10	8700	7300	5900	4300	2300	1500	3550
		5	9400	8000	6500	5000	3200	1900	4200
MIT.S.D.A.10.kW	1400	18	11900	10200	8100	5900	3400	1600	4100
		15	12500	10800	8700	6500	4100	1900	4700
		10	13500	11800	9800	7600	5300	2400	5800
		5	14500	12800	10800	8600	6300	3400	6700
MIT.S.D.A.15kW	1800	18	18800	15300	12400	9400	6300	2200	6100
		15	19800	16200	13300	10300	7200	3300	6900
		10	21300	17700	14800	11800	8700	5300	8400
		5	22900	19200	16300	13300	10200	6900	9800
MIT.S.D.A.19kW	2400	18	24000	20100	16100	12200	8000	2700	8000
		15	25200	21200	17200	13300	9100	3500	9100
		10	27200	23200	19300	15300	11200	6500	1100
		5	29200	25200	21200	17300	13100	8700	12900
MIT.S.D.A.24kW	3400	18	29600	24200	19500	14400	10200	3500	9600
		15	31000	25500	20900	16300	11500	6200	10900
		10	33400	27900	23100	18600	13800	8800	13300
		5	35800	30200	25500	20900	16200	11200	15400
MIT.S.D.A. 28kW	3750	18	34900	28200	23000	17800	12400	6400	11300
		15	36500	29900	24700	19400	14000	8200	12800
		10	39300	32600	27400	22000	16700	11000	15300
		5	42000	35300	30000	24700	19400	13800	18000
MIT.S.D.A. 38.kW	5200	18	47100	38100	31300	24400	17300	9800	15200
		15	49300	40300	33400	26500	19400	12000	17200
		10	53000	43900	37000	30000	23000	15600	20700
		5	56700	47500	40600	33600	26500	19200	24100
MIT.S.D.A 50.kW	5400	18	61400	52000	42600	32900	22900	10900	20600
		15	64300	55000	45500	35800	25800	14700	23400
		10	69200	60100	50400	40700	30800	20200	28200
		5	74300	65300	55700	45800	35700	25300	33100

MIT Hot Water Unit Heaters

Hot Water Unit Heaters with Axial Fans

Model	Air Flow	Inlet Air	Hot Water Capacity Kcal/H						
	m³/H	°C	B1	S	S	S	S	S	S
			110/80 °C	90/70 °C	80/60 °C	70/50 °C	60/40°C	50/30°C	45/40 °C
MIT. S.T.A.6kW	1000	18	7900	7100	5900	4700	3500	2200	2800
		15	8300	7500	6400	5000	3800	2600	3200
		10	9000	8100	6900	5700	4500	3200	3800
		5	9600	8800	7500	6300	5100	3900	4400
MIT.S.T.A. 9kW	1200	18	11300	9600	7900	6300	4700	3000	3800
		15	12000	10000	8400	6800	5200	3600	4300
		10	12900	11000	9300	7700	6000	4400	5100
		5	13900	12000	10200	8500	6900	5200	5900
MIT.S.T.A. 12kW	1250	18	15000	12200	9800	7500	4900	2100	4900
		15	15700	12900	10500	8200	5600	2500	5500
		10	17000	14000	11700	9400	6800	3900	6700
		5	18200	15300	12900	10600	8100	5300	7900
MIT.S.T.A. 16kW	2100	18	20200	16900	13500	10000	6300	2500	6700
		15	21200	17800	14500	11000	7300	3000	7700
		10	23000	19500	16100	12800	9100	4300	9400
		5	24700	21200	17900	14400	10800	6700	11000
MIT.S.T.A. 20kW	2300	18	25100	21200	17700	14100	10500	6900	8400
		15	26300	22400	18800	15200	11600	8000	9400
		10	28400	24300	20700	17100	13500	9900	11300
		5	30400	26300	22600	19000	15400	11700	13100
MIT.S.T.A. 25kW	2800	18	31300	25300	20600	15900	11000	5200	10000
		15	32700	26700	22000	17300	12400	7100	11400
		10	35200	29200	24500	19700	14900	9700	13700
		5	37800	31700	26900	22200	17300	12200	16100
MIT.S.T.A. 30kW	3100	18	36600	30100	24700	19200	13600	7400	11900
		15	38600	31700	26300	20800	15200	9300	13500
		10	51200	34600	29200	23700	18100	12200	16300
		5	44200	37500	32000	26500	20900	15100	18900
MIT.S.T.A. 40kW	4100	18	50500	40900	33300	25600	17500	6300	16200
		15	52900	43200	35600	27900	19900	10300	18500
		10	57000	47200	39500	31800	23800	15000	22200
		5	61200	51300	43500	35800	27800	19300	26000

Size Template for Hot Water Unit Heaters

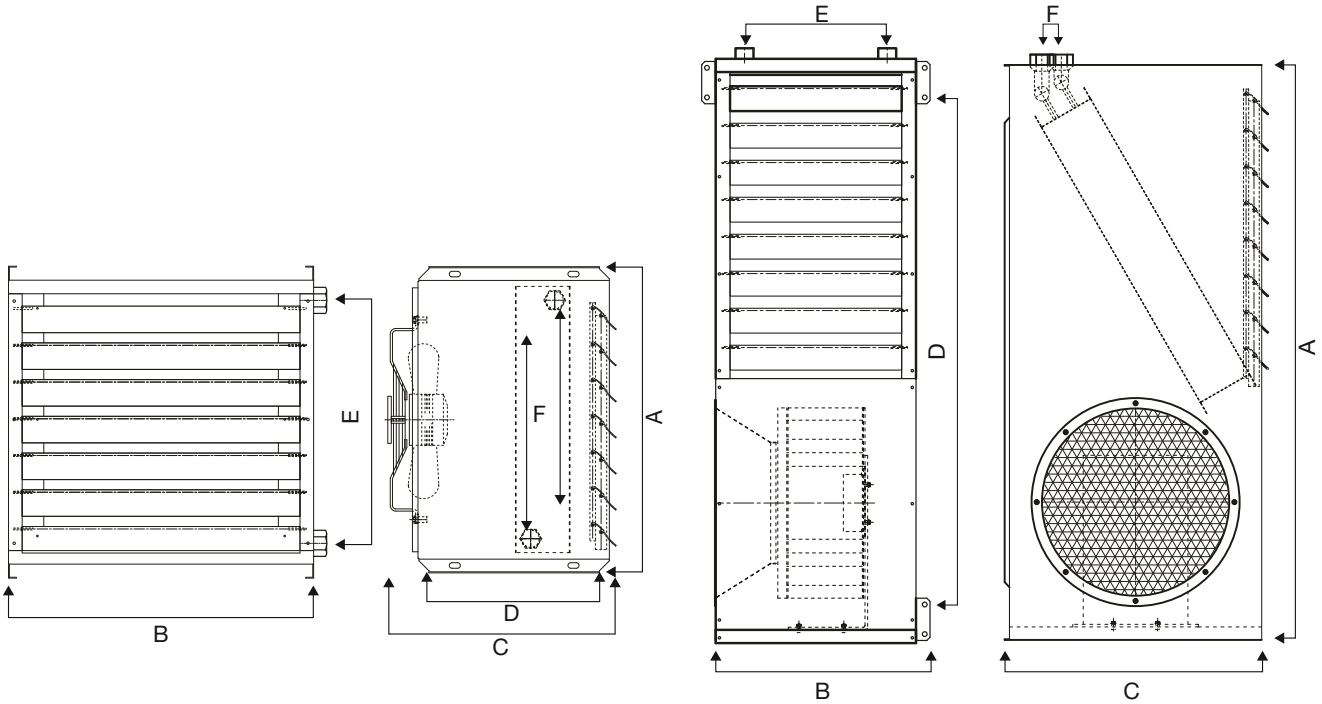

Model	Power/ Current W/A	Water Pressure Loss Kpa	Dimensions (mm)						Inlet/ Outlet Diameter	Weight Kg	Noise Db (A)
			Width (C)	Length (B)	Height (A)	D	E	F			
MIT.S.D.A 6kW	150 / 0,65	1,1	400	395	700	450	224	26	1/2"	19	70
MIT.S.D.A 10kW	200 / 0,9	2,9	430	460	800	500	290	26	1/2"	23	70
MIT.S.D.A 15kW	250 / 1,1	7,4	550	460	950	650	290	35	3/4"	29	79
MIT.S.D.A 19kW	210 / 1	9,9	550	520	1100	800	341	35	3/4"	36	60
MIT.S.D.A 24kW	500 / 1,8	7,2	650	585	1100	800	318	45	1"	43	66
MIT.S.D.A 28kW	500 / 1,8	11	665	585	1195	950	383	45	1"	47	66
MIT.S.D.A 38kW	800 / 3,7	22	725	650	1195	950	432	55	1 1/4"	56	*
MIT.S.D.A 50kW	800 / 3,7	10,3	725	650	1195	950	432	55	2 1/4"	60	*
MIT.S.T.A 6kW	90 / 0,38	1,9	380	460	420	280	222	26	1/2"	13	55
MIT.S.T.A 9kW	90 / 0,38	2,8	380	460	420	280	353	26	1/2"	14	55
MIT.S.T.A 12kW	90 / 0,38	5,2	380	470	500	280	416	35	3/4"	17	55
MIT.S.T.A 16kW	138 / 0,68	7,3	385	510	500	280	414	35	3/4"	19	62
MIT.S.T.A 20kW	138 / 0,68	12,4	385	540	620	280	536	35	3/4"	22	62
MIT.S.T.A 25kW	180 / 0,81	9,4	395	610	620	280	536	43	1"	26	67
MIT.S.T.A 30kW	180 / 0,81	14,1	395	655	690	280	583	45	1"	29	67
MIT.S.T.A 40kW	250 / 1,15	7,1	395	725	620	280	496	45	1 1/4"	33	71

MIT Steam Unit Heaters

Steam Unit Heaters with Radial Fans

Model	Air Flow	Inlet Air	Steam Capacity Kcal/H							
	m³/H	°C	B1	B2	B2	Bç	Bç	Bç	Bç	Bç
			3 Bar	5 Bar	6 Bar	3 Bar	5 Bar	6 Bar	8 Bar	10 Bar
MIT.B.D.A. 6kW	1050	18	7500	10400	10900	11700	13200	13900	14800	15500
		15	7700	10600	11200	12000	13500	14200	15100	15900
		10	8000	11000	11600	12400	14000	14700	15600	16400
MIT.B.D.A.10.kW	1400	18	10800	12600	13200	13800	15600	16300	17400	18300
		15	11100	12900	13500	14100	16000	16700	17800	18700
		10	11600	13400	14000	14600	16500	17300	18400	19300
		5	12100	13900	14500	15400	17400	18300	19400	20400
MIT.B.D.A.15kW	1800	18	15700	17200	18100	19900	22500	23600	25100	26400
		15	16100	17600	18500	20400	23000	24200	25700	27000
		10	16800	18300	19200	21100	23800	25000	26600	27900
		5	17500	19000	19900	22200	25100	26400	28100	29500
MIT.B.D.A.19kW	2400	18	19500	21100	22200	23000	26000	27300	29000	30500
		15	20000	21600	22700	23600	26600	28000	29800	31200
		10	20900	22500	23600	24400	27500	28900	30800	32300
		5	21800	23300	24400	25700	29100	30500	32500	34100
MIT.B.D.A.24kW	3400	18	25100	29900	31400	26500	30000	31500	33500	35200
		15	25700	30600	32100	27200	30700	32300	34300	36000
		10	26800	31700	33300	28100	31800	33400	35500	37300
		5	27900	32900	34400	29700	33500	35200	37400	39300
MIT.B.D.A. 28kW	3750	18	29800	38100	40000	37100	42000	44000	46900	49200
		15	30600	39000	40900	38100	43000	45100	48000	50400
		10	31900	40400	42400	39300	44500	46700	49700	52200
		5	33200	41900	43900	41500	46900	49300	52400	55000
MIT.B.D.A. 38.kW	5200	18	39000	49600	52100	46100	52100	54700	58200	61100
		15	40000	50700	53300	47300	53400	56100	59700	62600
		10	41700	52600	55200	48900	55200	58000	61700	64800
		5	43400	54600	57100	51600	58300	61200	65100	68300
MIT.B.D.A. 50kW	5400	18	49100	53000	55800	51500	58200	61100	65000	68300
		15	50400	54300	57100	52800	59600	62600	66600	70000
		10	52600	56400	59200	54600	61700	64800	68900	72300
		5	54800	58600	61300	57600	65100	68300	72700	76300

Steam Unit Heaters with Axial Fans

Model	Air Flow	Inlet Air	Steam Capacity Kcal/H							
	m³/H	°C	B1	B2	B2	Bç	Bç	Bç	Bç	Bç
			3 Bar	5 Bar	6 Bar	3 Bar	5 Bar	6 Bar	8 Bar	10 Bar
MIT.B.T.A. 6kW	1000	18	8100	9700	10200	10800	12200	12800	13600	14300
		15	8300	9900	10400	11100	12500	13100	14000	14700
		10	8700	10300	10800	11400	12900	13600	14400	15200
		5	9100	10700	11200	12100	13600	14300	15200	16000
MIT.B.T.A. 9kW	1200	18	9800	12300	13000	13300	15100	15800	16800	17700
		15	10000	12600	13300	13700	15400	16200	17200	18100
		10	10400	13100	13800	14100	16000	16700	17800	18700
		5	10900	13600	14300	14900	16800	17700	18800	19700
MIT.B.T.A. 12kW	1250	18	12000	15000	15700	15000	17000	17800	18900	19900
		15	12300	15300	16100	15400	17400	18200	19400	20400
		10	12800	15900	16700	15900	18000	18900	20100	21100
		5	13400	16500	17300	16800	19000	19900	21200	22200
MIT.B.T.A. 16kW	2100	18	16800	21300	22400	16900	19100	20100	21300	22400
		15	17300	21800	22900	17300	19600	20600	21900	23000
		10	18000	22700	23800	17900	20200	21300	22600	23700
		5	18700	23500	24600	18900	21400	22400	23900	25000
MIT.B.T.A. 20kW	2300	18	20200	24000	25300	21400	24200	25400	27000	28400
		15	20700	24600	25800	22000	24800	26000	27700	29100
		10	21600	25600	26800	22700	25700	26900	28700	30100
		5	22500	26500	27800	24000	27100	28400	30200	31700
MIT.B.T.A. 25kW	2800	18	25100	29900	31500	25600	29000	30300	32300	33900
		15	25700	30700	32300	26200	29600	31100	33100	34700
		10	26800	31900	33500	27100	30600	32200	34200	35900
		5	27900	33100	34700	28600	32300	33900	36100	37900
MIT.B.T.A. 30kW	3100	18	29000	32300	34000	34200	38600	40600	43200	45300
		15	29800	33100	34800	35100	39600	41600	44300	46500
		10	31100	34400	36100	36200	41000	43000	45800	48000
		5	32400	35700	37400	38200	43200	45400	48300	50700
MIT.B.T.A. 40kW	4100	18	40900	41800	44000	40800	46100	48400	51500	54100
		15	41800	42800	45000	41800	47300	49600	52800	55400
		10	43800	44500	46700	43200	48900	51300	54600	57300
		5	45700	46200	48400	45600	51500	54100	57600	60500

MIT Steam Unit Heaters

Size Template for Steam Unit Heaters

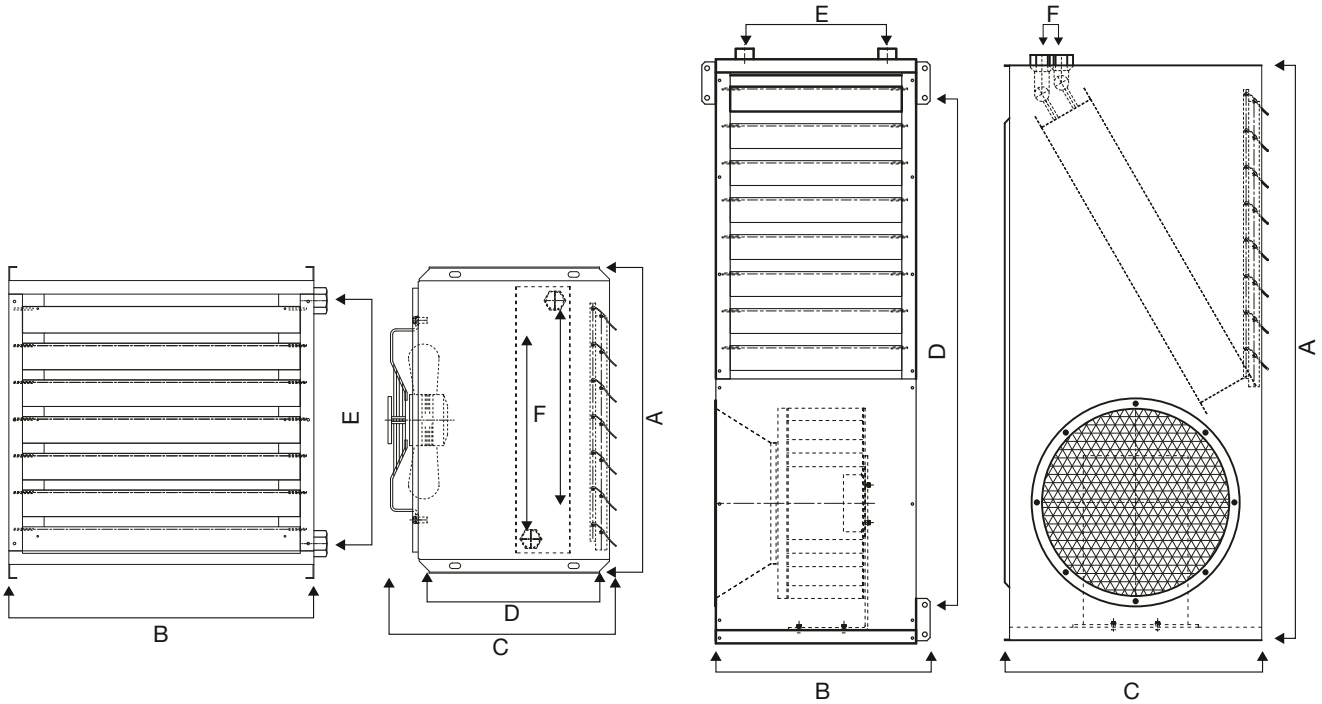

Model	Power/ Current W/A	Water Pressure Loss Kpa	Dimensions (mm)						Inlet/Outlet Diameter	Weight Kg	Noise Db (A)
			Width (C)	Length (B)	Height (A)	D	E	F			
MIT.B.D.A. 6kW	150 / 0,65	400	430	700	450	224	26	1/2"	3/4" - 3/4"	**	70
MIT.B.D.A.10kW	200 / 0,9	430	460	800	500	290	26	1/2"	3/4" - 3/4"	**	70
MIT.B.D.A.15kW	250 / 1,1	530	460	950	650	290	35	3/4"	1" - 3/4"	**	79
MIT.B.D.A.19kW	210 / 1	550	520	1100	800	341	35	3/4"	1" - 3/4"	**	60
MIT.B.D.A.24kW	500 / 1,8	650	585	1100	800	318	45	1"	1 1/4" - 1"	**	66
MIT.B.D.A.28kW	500 / 1,8	665	585	1250	950	383	45	1"	1 1/4" - 1"	**	66
MIT.B.D.A.38kW	800 / 3,7	725	660	1350	1050	432	55	1 1/4"	1 1/2" - 1 1/4"	**	
MIT.B.D.A. 50kW	800 / 3,7	760	660	1350	1050	432	55	2 1/4"	1 1/2" - 1 1/4"	**	
MIT.B.T.A. 6kW	90 / 0,38	360	470	440	260	290	26	1/2"	3/4" - 3/4"	**	55
MIT.B.T.A. 9kW	90 / 0,38	360	470	490	260	353	26	1/2"	1" - 3/4"	**	55
MIT.B.T.A.12kW	90 / 0,38	360	500	570	260	416	35	3/4"	1" - 3/4"	**	55
MIT.B.T.A.16kW	138 / 0,68	385	550	630	260	414	35	3/4"	1 1/4" - 1"	**	62
MIT.B.T.A.20kW	138 / 0,68	385	580	690	260	536	35	3/4"	1 1/4" - 1"	**	62
MIT.B.T.A.25kW	180 / 0,81	425	610	690	280	536	45	1"	1 1/4" - 1"	**	67
MIT.B.T.A.30kW	180 / 0,81	425	680	760	280	583	45	1"	1 1/2" - 1 1/4"	**	67
MIT.B.T.A.40kW	250 / 1,15	425	760	700	300	496	45	1 1/4"	1 1/2" - 1 1/4"	**	71

EKİN ENDÜSTRİYEL

HEAT TRANSFER PRODUCTS

SERPENTINES
RADIATORS
ECONOMIZERS

Serpentines

They are used as single or grouped where the heat needs to be changed. Serpentines can be used in every sector, especially in the textile sector, in air conditioners in drying machines and in stoves, especially in air handling units.

By taking into account customer demands and product use places, product selection is made in the most appropriate way by considering efficiency, product costs. Alternative solutions are offered by considering environmental conditions and safety rules. Steam, hot oil, sea water, air and water can be used as fluid in the serpentines.

Spiral Winged Serpentines

Depending on the customer request, serpentine is manufactured by using electro-galvanized coating or hot-dip galvanized coating on carbon steel tube DKP finned coils. Thanks to this coating in serpentine production, the heat transfer is increased while the oxidation rate is reduced.

In standard serpentine products, the wings are fixed to the pipe by spot welding. However, continuous welding can also be applied between wing and pipe during production of serpentine according to customer demand.

Oval Pipe Serpentines

The most common problem in applications related to fluid mechanics is the friction resistance caused by the form of bodies. The form of the body in contact with the fluid can be reduced by making it more suitable to the current shape.

Oval pipes are more suitable to the current shape than circular pipes.

Both spiral winged serpentine and flake serpentine are manufactured with oval pipes.

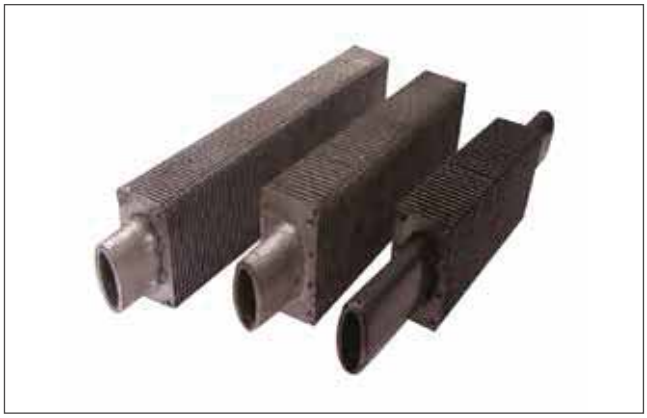

Sequins Serpentines

Depending on the customer's request, plating solder coating can be applied instead of internal blowing in the stamping coils with copper and special alloy. With this coating, the heat transfer is increased while the oxidation rate is reduced. In stamping serpentines, the number of pipes can be changed according to customer's requirement.

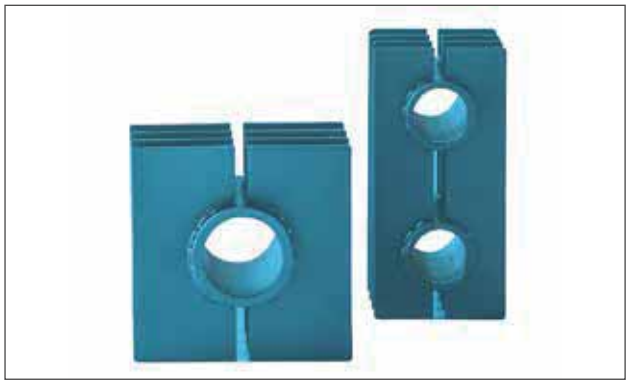

Grooved Pipes

In terms of heat transfer and pressure drop in the heat exchangers, the properties of the fluid, flow condition and heat transfer surface area are effective. The surface shape of the tubular pipes increases the turbulent properties of the fluid. Thanks to the helically-shaped flow patterns around the pipes, the heat transfer rate can be increased significantly by providing turbulence at low fluid speeds. The grooving of the pipes with a spiral pattern does not have any negative effect on the durability of the material but on the contrary provides an improved thermal expansion feature.

Grooved pipes can be used primarily in evaporators or condenser heat exchangers for air conditioning and cooling purposes, heat exchangers produced with such pipes can also be used for industrial air discharge, condenser / chiller, flue gas, steam, water, glycol, alcohol, oil and many other special applications. suitable.

Radiators

The radiators formed by the grouping of the serpentines vary according to their fluid types and usage areas. Fluid types; hot water, superheated water, seawater, steam, superheated oil and nitrogen etc. radiators used in the gas. It is possible to classify according to the Serpentine type. It is listed as bare tube, serpentine with straight pipe, serpentine with oval pipe, flat double pipe with winged, grooved and crooked pipe radiators.

The radiators classified according to the serpentine structure can also be classified as galvanized, electro galvanized coated serpentine and hot dipped galvanized stud serpentine. According to the serpentine, wing, mirror and collector material used, it can be classified as complete carbon steel, complete stainless steel, complete copper serpentine and radiator group as different material radiators.

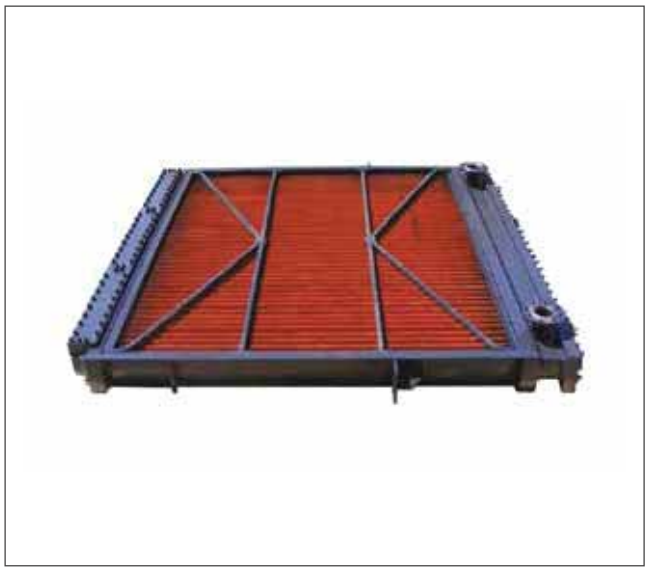

Pipe and Wing Information

Carbon steel, stainless steel, copper, brass and bafon pipe and special alloy tube serpentines can be used. Depending on the type of fluid, area and purpose of use, pipe and wing selections are made in such a way that highest efficiency is achieved by considering fluid side pressure drops.

Usage Areas

It is used in textile sector, drying machines, air heating and ambient heating and / or cooling depending on the fluid type. It is used in hot oil systems for heating and / or hot air. The radiators that can be used in the air-oil cooling process are also used for the cooling of sea water and air in the shipping sector.

Flue Gas Economizers

Today's competitive conditions lead firms to maintain the highest level of energy with high cost. In particular, the use of waste hot water energy in the textile sector with the use of waste flue gas generated in steam, water and hot oil boilers contributes to the production costs and the country's economy. The systems made by taking into account the process values pay themselves in a short time. Economizers take names according to processes. Waste flue gas is used to obtain hot water and hot air from the gases thrown into the atmosphere as in the ram machines used in the textile industry.

The most important points in the applications of waste flue gas are the properties of the gas and the condensation temperatures. In the case of flue gases, acid appears in case of condensation and all surfaces with condensation must be made of acid-resistant materials. Condensation is not preferred if the minimum pressure loss is targeted and the economizer can be designed from carbon-steel materials. We can classify according to economizers systems and materials. Economizers are classified according to the processes and materials used.

Superheated Water Production Economiser

- External dimensions of 4490x4191x1320 mm.
- 1"x3.20mm P235GH ST 35-8 quality carbon steel.
- 8 mm pitch on the pipe, 13x1,20 mm.
- DKP Wing Coil and Continuous MIG MAG Welding Serpentine.
- Economizer production with elbow rotating and 120 bar compressive strength.

Economizers by System;

Non-Condensing Waste Smoke Gas Economizers;

- Hot Water Generators
- Super Heated Water Generators
- Economizers with Low Pressure Steam Generators and Hot Air Generators

Condensing Waste Chimney Gas Economizers

- Hot Water Generators
- Superheated Water Generators
- Low Pressure Steam Generator
- Hot Air Generators

Economizers by Material;

- Complete Carbon Steel Economizers
- Bladed Serpentine, Finned Serpentine Economizers
- Complete Stainless Steel Economizers
- No-Wing Serpentine, Winged Serpentine Economisers

Waste Heat Recovery Systems

The boiler feed water is heated with the smoke gases inside the economizer before entering the boiler's actual heating surfaces. In this way, as the temperature difference between the water sent to the boiler and the water being heated is reduced, the output of the gases in the water becomes easier and the thermal efficiency of the boiler increases.

EKİN ENDÜSTRİYEL

WATER HEATER **TANKS**

PRESSURE VESSELS

MIT Pressure Vessels

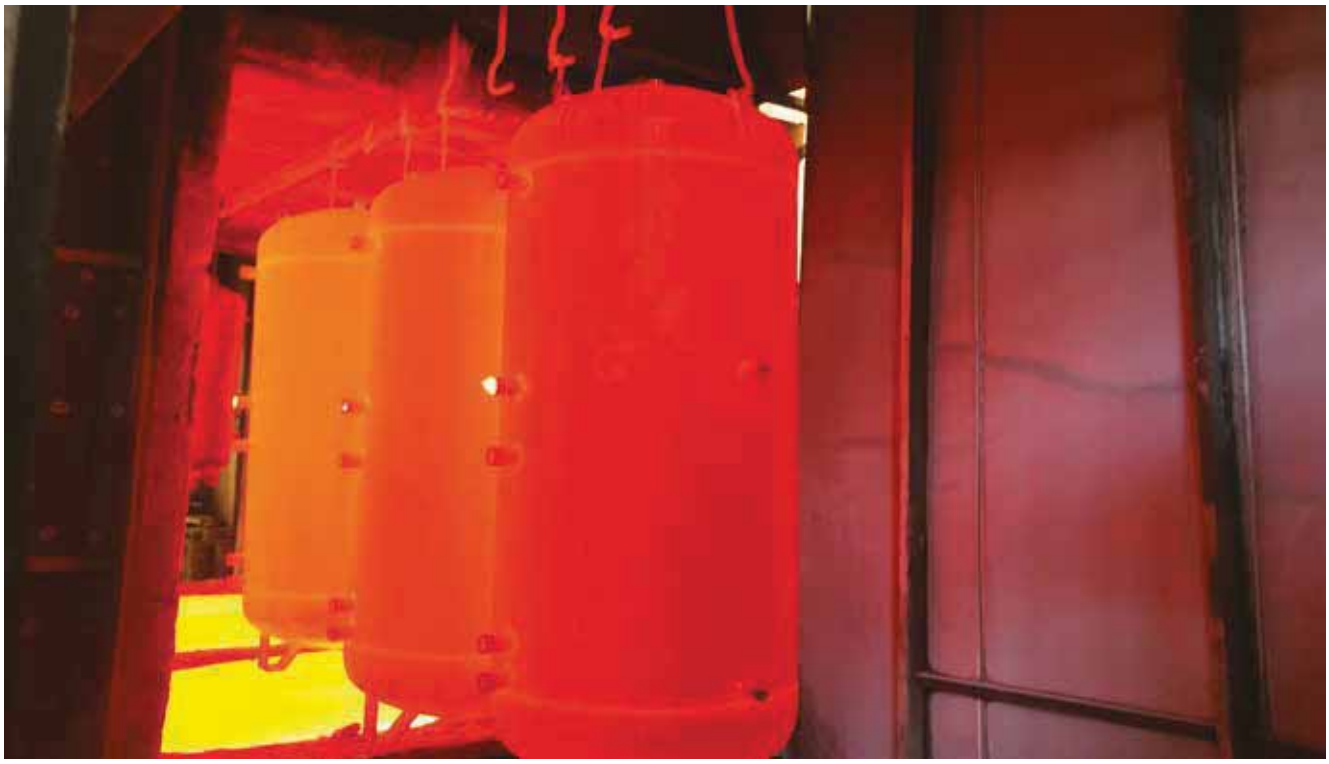

Water Heater Tanks

MIT, one of the most known and preferred brands of Turkey, has been continuing to create new ideas and developments to improve plate heat exchanger sector.

Ekin aims to develop its product range and the most concrete proof of this determination are MIT accumulation tanks and boilers.

Accumulation tanks are used for the hygienic storage of conditioned water in heating and cooling systems. It is usually mounted behind a heat exchanger (plate heat exchanger, tubular heat exchanger, water heater tanks, chiller, fancoil etc.). Insulation materials with low heat loss are used in all products.

MIT series single-serpentine and double-serpentine water heater tanks provide both economical and hygienic domestic hot water with heat energy from single and double heat source (hot water boiler, steam water heater tanks, solar panels, heat pump, geothermal energy etc.). In addition, since the serpentine can reach to the lower points, the formation of the legionnaire bacteria is prevented.

MIT series electric hot water producers (electric boilers) provide comfortable, hygienic hot water production in processes that have difficulty in supplying heater fluid or in places where they prefer to meet the need for electricity and hot water. Depending on the need, different capacities are made of stainless steel tubular electrical resistors.

Usage Areas: Accumulation tanks are used in villas, apartments, hospitals, gyms, factories, construction sites, chillers, central heating systems for various processes, cascade system boiler rooms and heat exchanger apartments.

MIT Single Serpentine Water Heater Tanks

The single serpentine water heater tank is used to obtain hot water in single heat source systems (solid / liquid /gas fired boiler or solar energy).

Volume	100 lt – 3000 lt
Capacity	5 kW – 237 kW
Maximum Working Temperature	95 °C
Body Pressure	10 Bar
Interior Surface Coating	Glasslined enamel is applied according to DIN 4753-3 standard.
Insulation 100L-500L 800L-1000L 800L-3000L 800L-3000L	Complies with EN 15332 Energy Efficiency Standard 42 kg/m³ HCFC free water based hard polyurethane 42 kg/m³ HCFC free water based hard polyurethane (Optional) 18 kg/m³ Soft polyurethane 26 kg/m³ Flame retardant soft polyurethane (Optional)
Outer Sheath Coating 160L-500L 800L-3000L	Electrostatic Powder Coated Sheet / Vinyl Artificial Leather Vinyl Artificial Leather
Thermometer	0 °C – 120 °C
Cleaning Flange	All types of cleaning and inspection cover are available.
Electric Heater	An optional electric heater is available.
Cathodic Protection Element	Magnesium Anode according to DIN 4753-3 standard (Optional electronic anode application).

Depending on customer requirements, all capacities can be made with polyurethane insulation and electrostatic powder coating on galvanized steel sheet.

MIT Single Serpentine Water Heater Tanks

1.1. MIT Single Serpentine Water Heater Tanks Operating Characteristics

		Boiler	MIT 101	MIT 161	MIT 201	MIT 301	MIT 401	MIT 501	MIT 801	MIT 1001	MIT 1501	MIT 2001	MIT 2501	MIT 3001
10/45 °C	90 °C	Q (kW)	29,0	41,5	58,0	58,0	69,8	90,6	120,4	120,4	144,0	174,5	228,6	254,7
		M (lt/h)	712	1020	1426	1426	1715	2226	2958	2958	3538	4286	5618	6258
	80 °C	Q (kW)	22,1	32,3	45,0	45,0	52,9	69,4	91,9	91,9	110,1	134,7	176,5	197,5
		M (lt/h)	543	794	1106	1106	1300	1706	2258	2258	2706	3309	4338	4852
	70 °C	Q (kW)	16,3	23,8	34,0	34,0	39,7	51,6	69,9	69,9	83,6	103,5	134,9	153,1
		M (lt/h)	400	586	834	834	974	1269	1717	1717	2055	2543	3315	3761
10/60 °C	90 °C	Q (kW)	24,3	36,1	50,2	50,2	59,7	76,1	104,0	104,0	122,8	151,2	198,5	221,2
		M (lt/h)	418	620	864	864	1026	1308	1788	1788	2112	2600	3415	3805
	80 °C	Q (kW)	18,5	26,9	38,5	38,5	44,2	56,9	78,2	78,2	90,4	111,8	139,6	163,4
		M (lt/h)	318	462	662	662	760	978	1344	1344	1554	1922	2400	2811
	70 °C	Q (kW)	11,9	16,7	24,6	24,6	28,6	37,3	50,8	50,8	61,2	75,5	97,5	110,5
		M (lt/h)	204	287	423	423	492	642	874	874	1052	1298	1676	1900
		V (m^3/h)	3,5	7,0	7,0	7,0	7,0	7,0	7,0	7,0	7,0	7,0	9,3	9,3
		ΔP (mS)	0,53	0,87	1,24	1,24	1,49	1,99	2,74	2,74	3,42	4,29	4,22	4,84

1.2. MIT Single Serpentine Water Heater Tanks ΔT= 20 °C Operating Characteristics

		Boiler	MIT 101	MIT 161	MIT 201	MIT 301	MIT 401	MIT 501	MIT 801	MIT 1001	MIT 1501	MIT 2001	MIT 2501	MIT 3001
10/45 °C	90/70 °C	Q (kW)	21,5	29,1	45,4	45,4	55,8	75,6	111,1	111,1	141,9	180,3	236,1	272,1
		M (lt/h)	529	714	1114	1114	1372	1857	2729	2729	3486	4429	5801	6687
		V (m^3/h)	1,0	1,3	2,0	2,0	2,5	3,3	4,9	4,9	6,3	8,0	10,4	12,0
		ΔP (mS)	0,08	0,05	0,14	0,14	0,22	0,53	1,41	1,41	2,90	5,79	5,26	8,24
	80/60 °C	Q (kW)	14,5	19,4	31,1	31,1	38,4	53,5	77,9	77,9	100,0	127,9	167,5	193,1
		M (lt/h)	357	477	763	763	943	1315	1915	1915	2458	3143	4115	4744
		V (m^3/h)	0,6	0,9	1,4	1,4	1,7	2,4	3,4	3,4	4,4	5,6	7,4	8,5
		ΔP (mS)	0,02	0,02	0,07	0,07	0,13	0,29	0,73	0,73	1,58	3,03	2,84	4,26
	70/50 °C	Q (kW)	9,1	12,1	19,8	19,8	25,2	34,9	52,3	52,3	67,5	88,4	115,1	133,7
		M (lt/h)	223	297	486	486	620	857	1286	1286	1657	2172	2829	3286
		V (m^3/h)	0,4	0,5	0,9	0,9	1,1	1,5	2,3	2,3	3,0	3,9	5,0	5,8
		ΔP (mS)	0,01	0,01	0,03	0,03	0,06	0,15	0,37	0,37	0,77	1,54	1,43	2,19
10/60 °C	90/70 °C	Q (kW)	16,3	23,3	36,1	36,1	45,4	62,8	90,7	90,7	116,3	150,0	195,4	225,6
		M (lt/h)	280	400	620	620	780	1080	1560	1560	2000	2580	3361	3881
		V (m^3/h)	0,7	1,0	1,6	1,6	2,0	2,8	4,0	4,0	5,1	6,6	8,6	10,0
		ΔP (mS)	0,03	0,02	0,10	0,10	0,17	0,37	0,98	0,98	1,98	3,96	3,72	5,73
	80/60 °C	Q (kW)	10,4	13,8	22,1	22,1	28,5	39,5	59,3	59,3	75,6	97,7	127,9	148,9
		M (lt/h)	178	238	380	380	490	680	1020	1020	1300	1680	2200	2560
		V (m^3/h)	0,5	0,6	1,0	1,0	1,3	1,7	2,6	2,6	3,3	4,3	5,6	6,5
		ΔP (mS)	0,01	0,01	0,03	0,03	0,07	0,17	0,40	0,40	0,91	1,76	1,75	2,61
	70/50 °C	Q (kW)	5,1	6,4	11,0	11,0	14,0	20,9	32,9	32,9	43,0	55,8	73,3	86,1
		M (lt/h)	88	110	190	190	240	360	566	566	740	960	1260	1480
		V (m^3/h)	0,2	0,3	0,5	0,5	0,6	0,9	1,4	1,4	1,9	2,4	3,2	3,8
		ΔP (mS)	0,01	0,01	0,01	0,01	0,01	0,04	0,19	0,19	0,36	0,62	0,67	0,88

Q (kW) : Maximum coil thermal power according to operating temperature.
M (lt/h) : Continuous hot water flow rate that can be produced at maximum heat power.
V (m^3/h) : The circulation pump flow rate required to provide the kW and lt/h values given above.
ΔP (mS) : m^3/h water pressure loss due to circulation within the coil.

The manufacturer reserves the right to change the product features, technical dimensions, information and installation diagrams specified in this catalog without notice. None of the information provided can be copied or used without the permission of the manufacturer. In no way can the manufacturer be held responsible by giving examples of technical information and diagrams. In case of need, we request you to request a special technical drawing for your project for exact dimensions.

1.3. MIT Single Serpentine Water Heater Tanks Heat Pump Installation Operating Characteristics

		Boiler	MIT 101	MIT 161	MIT 201	MIT 301	MIT 401	MIT 501	MIT 801	MIT 1001	MIT 1501	MIT 2001	MIT 2501	MIT 3001
10/45 °C	55/50 °C	Q (kW)	5,8	7,8	12,0	12,0	14,8	20,5	29,1	29,1	37,2	40,1	53,5	53,5
		M (lt/h)	146	195	300	300	370	513	729	729	933	1006	1341	1341
		V (m^3/h)	1,0	1,4	2,1	2,1	2,6	3,6	5,1	5,1	6,5	7,0	9,3	9,3
		ΔP (mS)	0,06	0,05	0,14	0,14	0,22	0,61	1,58	1,58	3,16	4,62	4,47	5,12

For a pump with heat power 12 kW nom. at minimum we would recommend MIT 201 and for the 24kW variant the MIT 801 water heater tank.

Q (kW) : Recommended operating conditions are +7 °C outdoor environment -35 °C water temperature for the heating pumps at their nominal thermal power.
M (lt/h) : Continuous hot water flow rate at the rated power of the heat pump (10/45°C).
V (m^3/h) : The circulation pump flow rate required to provide the kW and lt/h values given above.
ΔP (mS) : m^3/h water pressure loss due to circulation within the coil.

1.4. Selecting a Solar Panel According to MIT Water Heater Tanks Coil Area

		Boiler	MIT 101	MIT 161	MIT 201	MIT 301	MIT 401	MIT 501	MIT 801	MIT 1001	MIT 1501	MIT 2001	MIT 2501	MIT 3001
10/45 °C	55/50 °C	A (m^2)	7	10	16	16	20	28	42	42	54	69	90	105
		Q (kW)	4,5	6,0	9,7	9,7	12,2	17,0	25,2	25,2	32,4	41,5	54,4	63,0
		V (m^3/h)	0,39	0,52	0,84	0,84	1,06	1,48	2,19	2,19	2,82	3,61	4,74	5,48
		ΔP (mS)	0,01	0,01	0,03	0,03	0,06	0,13	0,30	0,30	0,68	1,32	1,20	1,81

Solar panel with a net collection area of up to 42 m^2 can be connected to the MIT 801 water heater tank.

A (m^2) : Maximum panel size with Cu/Cu-selective surface and prismatic glass that can be connected to the boiler.
Q (kW) :The maximum net panel size of the solar panel and the maximum instantaneous heat energy that can be attained according to the boiler model.
V (m^3/h) : The circulation pump flow rate required to provide the m^2 and kW values given above.
ΔP (mS) : m^3/h water pressure loss due to circulation within the coil.

Panel size that have been given above according to boiler and coil size, show the thermal power of the boiler coil. The values in the GE volume sheet take precedence for the recommended boiler volumes according to the panel size. Given m^2 values and kW values has been calculated according to the monthly averages of the annual data provided by T. C. Directorate of Meteorology. It varies by ±15% yearly.

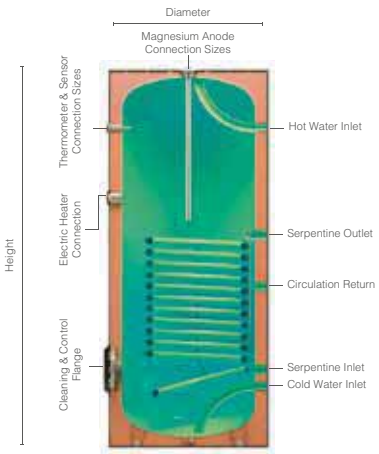

Single Serpentines Water Heater Tank Connection Diagram

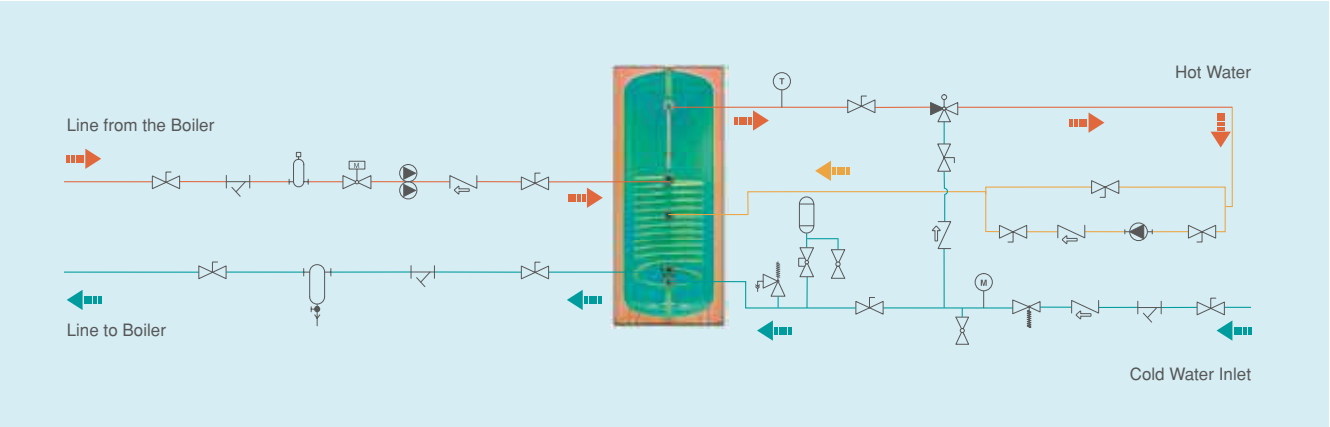

	Unit	MIT 101	MIT 161	MIT 201	MIT 301	MIT 501	MIT 801	MIT 1001	MIT 1501	MIT 2001	MIT 2501	MIT 3001
Volume	lt	100	160	200	300	500	800	1000	1500	2000	2500	3000
Diameter	mm	490	590	590	700	750	900	1000	1120	1260	1460	1460
Height	mm	1080	1125	1320	1210	1800	2100	2070	2300	2230	2200	2560
Electric Heater Connection	inch	1 1/2"	1 1/2"	1 1/2"	1 1/2"	1 1/2"	2"	2"	2"	2"	2"	2"
Cleaning & Control Flange	inch	4"	4"	4"	4"	4"	5"	5"	5"	5"	5"	5"
Hot & Cold Water Inlet	inch	3/4"	3/4"	3/4"	1"	1"	1 1/4"	1 1/4"	1 1/4"	1 1/4"	1 1/2"	1 1/2"
Circulation Return	inch	3/4"	3/4"	3/4"	1"	1"	1 1/4"	1 1/4"	1 1/4"	1 1/4"	1 1/2"	1 1/2"
Coil Entry / Exit	inch	1"	1 1/4"	1 1/4"	1 1/4"	1 1/4"	1 1/4"	1 1/4"	1 1/4"	1 1/4"	1 1/2"	1 1/2"
Isolation Type & Thickness	mm	PU/50	PU/50	PU/50	PU/50	PU/50	PU/80	PU/80	PU/80	PU/80	PU/80	PU/80
Gross Weight	kg	69	91	109	123	194	261	283	380	594	717	840
Tipping Point	mm	1205	1290	1465	1420	1970	2305	2320	2580	2580	2660	3020
Magnesium Anode Connector Dimensions	inch	1 1/4"	1 1/4"	1 1/4"	1 1/4"	1 1/4"	1 1/4"	1 1/4"	1 1/4"	1 1/4"	1 1/4"	1 1/4"
Thermometer & Sensor Connector Dimensions	inch	1/2"	1/2"	1/2"	1/2"	1/2"	1/2"	1/2"	1/2"	1/2"	1/2"	1/2"

Solar Panel	Temperature Display	Pressure Display	Switch Flow	Pump	Twin Pump	Check Valve	Air Relief Cock
Bypass Vanası	Pressure Breaker	Dirt Holder	Discharge Valve	3 Way Valve	Sediment Holder	Air Separat	Expansion Tanks with membrane
Balance Valve	Lock Valve	Radiator Valve	Spherical Valve	Pressure Safety Valve	3 Way Prorport. Motor Valve	2 Way Motor Valve	Thermostatic Valve

MIT Double Serpentines Water Heater Tank

The double coil water heater tank is used to obtain hot water in two heat source systems (solid, liquid, gas fired boiler, solar energy, waste energy).

Volume	160 lt – 3000 lt
Capacity	4,2 kW - 172,5 kW (Only the upper serpentine value is given.)
Maximum Operating Temperature	95 °C
Body Pressure	10 Bar
Interior Surface Coating	Glasslined enamel is applied according to DIN 4753-3 standard.
Insulation	Complies with EN 15332 Energy Efficiency Standard
160L-500L	42 kg/m³ HCFC free water based hard polyurethane
800L-1000L	42 kg/m³ HCFC free water based hard polyurethane (Optional)
800L-3000L	18 kg/m³ Soft polyurethane
800L-3000L	26 kg/m³ Flame retardant soft polyurethane (Optional)
Outer Sheath Coating	
160L-500L	Electrostatic Powder Coated Sheet / Vinyl Artificial Leather
800L-3000L	Vinyl Artificial Leather
Thermometer	0 °C – 120 °C
Cleaning Flange	All types of cleaning and inspection cover are available.
Electric Heater	An optional electric heater is available.
Cathodic Protection Element	Magnesium Anode according to DIN 4753-3 standard (Optional electronic anode application.).

Depending on customer requirements, all capacities can be made with polyurethane insulation and electrostatic powder coating on galvanized steel sheet.

MIT Double Serpentines Water Heater Tank

2.1. MIT Double Serpentines Water Heater Tank, Lower Coil Fast Water Heater Tank Operating Characteristics

		Boiler	MIT 162	MIT 202	MIT 302	MIT 402	MIT 502	MIT 802	MIT 1002	MIT 1502	MIT 2002	MIT 2502	MIT 3002
10/45 °C	90 °C	Q (kW)	30,6	36,1	36,1	47,8	90,6	120,4	120,4	144,0	174,5	228,6	254,7
		M (lt/h)	752	886	886	1174	2226	2958	2958	3538	4286	5618	6258
	80 °C	Q (kW)	24,4	29,1	29,1	37,9	69,4	91,9	91,9	110,1	134,7	176,5	197,5
		M (lt/h)	599	714	714	932	1706	2258	2258	2706	3309	4338	4852
	70 °C	Q (kW)	17,4	20,6	20,6	27,7	51,6	69,9	69,9	83,6	103,5	134,9	153,1
		M (lt/h)	429	507	507	680	1269	1717	1717	2055	2543	3315	3761
10/60 °C	90 °C	Q (kW)	25,9	31,3	31,3	40,0	76,1	104,0	104,0	122,8	151,2	198,5	221,2
		M (lt/h)	445	538	538	688	1308	1788	1788	2112	2600	3415	3805
	80 °C	Q (kW)	19,7	23,6	23,6	30,7	56,9	78,2	78,2	90,4	111,8	139,6	163,4
		M (lt/h)	338	406	406	528	978	1344	1344	1554	1922	2400	2811
	70 °C	Q (kW)	11,9	14,9	14,9	19,8	37,3	0,1	50,8	0,0	75,5	97,5	110,5
		M (lt/h)	205	256	256	340	642	874	874	1052	1298	1676	1900
		V (m^3/h)	7,0	7,0	7,0	7,0	7,0	7,0	7,0	7,0	7,0	9,3	9,3
		ΔP (mS)	0,55	0,66	0,66	0,88	1,77	2,43	2,43	3,04	3,81	4,36	5,00

2.2. MIT Double Serpentines Water Heater Tank, Lower Coil ΔT= 20 °C Operating Characteristics

		Boiler	MIT 162	MIT 202	MIT 302	MIT 402	MIT 502	MIT 802	MIT 1002	MIT 1502	MIT 2002	MIT 2502	MIT 3002
10/45 °C	90/70 °C	Q (kW)	18,7	24,0	24,0	34,5	75,6	111,1	111,1	141,9	180,3	236,1	272,1
		M (lt/h)	460	589	589	849	1857	2729	2729	3486	4429	5801	6687
		V (m^3/h)	0,8	1,1	1,1	1,5	3,3	4,9	4,9	6,3	8,0	10,4	12,0
		ΔP (mS)	0,01	0,03	0,03	0,08	0,53	1,41	1,41	2,90	5,79	5,26	8,24
	80/60 °C	Q (kW)	12,1	15,8	15,8	23,4	53,5	77,9	77,9	100,0	127,9	167,5	193,1
		M (lt/h)	297	389	389	574	1315	1915	1915	2458	3143	4115	4744
		V (m^3/h)	0,5	0,7	0,7	1,0	2,4	3,4	3,4	4,4	5,6	7,4	8,5
		ΔP (mS)	0,01	0,01	0,01	0,03	0,29	0,73	0,73	1,58	3,03	2,84	4,26
	70/50 °C	Q (kW)	7,0	9,5	9,5	14,7	34,9	52,3	52,3	67,5	88,4	115,1	133,7
		M (lt/h)	171	234	234	360	857	1286	1286	1657	2172	2829	3286
		V (m^3/h)	0,3	0,4	0,4	0,6	1,5	2,3	2,3	3,0	3,9	5,0	5,8
		ΔP (mS)	0,01	0,01	0,01	0,01	0,15	0,37	0,37	0,77	1,54	1,43	2,19
10/60 °C	90/70 °C	Q (kW)	14,7	18,8	18,8	27,7	62,8	90,7	90,7	116,3	150,0	195,4	225,6
		M (lt/h)	252	324	324	476	1080	1560	1560	2000	2580	3361	3881
		V (m^3/h)	0,6	0,8	0,8	1,2	2,8	4,0	4,0	5,1	6,6	8,6	10,0
		ΔP (mS)	0,01	0,02	0,02	0,05	0,37	0,98	0,98	1,98	3,96	3,72	5,73
	80/60 °C	Q (kW)	8,3	10,9	10,9	16,7	39,5	59,3	59,3	75,6	97,7	127,9	148,9
		M (lt/h)	142	188	188	288	680	1020	1020	1300	1680	2200	2560
		V (m^3/h)	0,4	0,5	0,5	0,7	1,7	2,6	2,6	3,3	4,3	5,6	6,5
		ΔP (mS)	0,01	0,01	0,01	0,01	0,17	0,40	0,40	0,91	1,76	1,75	2,61
	70/50 °C	Q (kW)	3,4	4,8	4,8	8,0	20,9	32,9	32,9	43,0	55,8	73,3	86,1
		M (lt/h)	58	83	83	138	360	566	566	740	960	1260	1480
		V (m^3/h)	0,1	0,2	0,2	0,4	0,9	1,4	1,4	1,9	2,4	3,2	3,8
		ΔP (mS)	0,01	0,01	0,01	0,01	0,04	0,19	0,19	0,36	0,62	0,67	0,88

Q (kW) : Maximum coil thermal power according to operating temperature.
M (lt/h) : Continuous hot water flow rate that can be produced at maximum heat power.
V (m^3/h) : The circulation pump flow rate required to provide the kW and lt/h values given above.
ΔP (mS) : m^3/h water pressure loss due to circulation within the coil.

2.3. MIT Double Serpentines Water Heater Tank, Upper Coil Fast Water Heater Tank Operating Characteristics

		Boiler	MIT 162	MIT 202	MIT 302	MIT 402	MIT 502	MIT 802	MIT 1002	MIT 1502	MIT 2002	MIT 2502	MIT 3002
10/45 °C	90 °C	Q (kW)	24,3	30,6	30,6	36,1	58,8	64,3	64,3	64,3	95,2	118,6	140,7
		M (lt/h)	597	752	752	886	1446	1580	1580	1580	2340	2915	3458
	80 °C	Q (kW)	19,7	24,4	24,4	29,1	45,0	49,0	49,0	49,0	73,4	90,6	107,8
		M (lt/h)	483	600	600	714	1106	1203	1203	1203	1803	2226	2649
	70 °C	Q (kW)	14,3	17,4	17,4	20,6	34,1	37,3	37,3	37,3	55,6	68,8	82,5
		M (lt/h)	351	429	429	507	837	917	917	917	1366	1692	2026
10/60 °C	90 °C	Q (kW)	21,2	25,9	25,9	31,3	50,8	55,6	55,6	55,6	82,5	102,5	120,7
		M (lt/h)	364	445	445	538	874	956	956	956	1418	1762	2076
	80 °C	Q (kW)	15,7	19,7	19,7	22,9	37,9	41,1	41,1	41,1	62,2	76,9	91,6
		M (lt/h)	270	338	338	394	652	706	706	706	1070	1322	1576
	70 °C	Q (kW)	9,5	11,9	11,9	14,3	23,8	26,2	26,2	26,2	39,7	47,7	58,3
		M (lt/h)	164	204	204	246	410	450	450	450	682	820	1002
		V (m^3/h)	7,0	7,0	7,0	7,0	7,0	7,0	7,0	7,0	7,0	9,3	9,3
		ΔP (mS)	0,50	0,62	0,62	0,75	1,24	1,37	1,37	1,37	2,11	1,95	2,37

2.4 MIT Double Serpentines Water Heater Tank, Upper Serpentine ΔT= 20 °C Operating Characteristics

		Boiler	MIT 162	MIT 202	MIT 302	MIT 402	MIT 502	MIT 802	MIT 1002	MIT 1502	MIT 2002	MIT 2502	MIT 3002
10/45 °C	90/70 °C	Q (kW)	13,7	18,0	18,0	24,0	45,4	50,8	50,8	50,8	83,3	101,2	125,6
		M (lt/h)	337	443	443	589	1114	1249	1249	1249	2046	2486	3086
		V (m^3/h)	0,6	0,8	0,8	1,1	2,0	2,2	2,2	2,2	3,7	4,5	5,6
		ΔP (mS)	0,01	0,01	0,01	0,03	0,14	0,18	0,18	0,18	0,65	0,53	0,98
	80/60 °C	Q (kW)	8,6	12,0	12,0	15,8	31,1	34,9	34,9	34,9	58,2	71,2	88,4
		M (lt/h)	211	294	294	389	763	857	857	857	1429	1749	2172
		V (m^3/h)	0,4	0,5	0,5	0,7	1,4	1,5	1,5	1,5	2,6	3,1	3,9
		ΔP (mS)	0,01	0,01	0,01	0,01	0,07	0,11	0,11	0,11	0,31	0,27	0,50
	70/50 °C	Q (kW)	4,7	7,0	7,0	9,5	19,8	22,6	22,6	22,6	38,4	47,7	59,9
		M (lt/h)	114	171	171	234	486	554	554	554	943	1172	1472
		V (m^3/h)	0,2	0,3	0,3	0,4	0,9	1,0	1,0	1,0	1,7	2,1	2,6
		ΔP (mS)	0,01	0,01	0,01	0,01	0,03	0,04	0,04	0,04	0,18	0,16	0,27
10/60 °C	90/70 °C	Q (kW)	10,5	14,2	14,2	18,8	36,5	40,7	40,7	40,7	68,0	83,7	104,0
		M (lt/h)	180	244	244	324	628	700	700	700	1170	1440	1788
		V (m^3/h)	0,5	0,6	0,6	0,8	1,6	1,8	1,8	1,8	3,0	3,7	4,6
		ΔP (mS)	0,01	0,01	0,01	0,02	0,10	0,13	0,13	0,13	0,48	0,36	0,64
	80/60 °C	Q (kW)	5,6	8,1	8,1	11,0	22,6	25,6	25,6	25,6	43,6	53,5	66,9
		M (lt/h)	96	140	140	190	388	440	440	440	750	920	1150
		V (m^3/h)	0,2	0,4	0,4	0,5	1,0	1,1	1,1	1,1	1,9	2,4	2,9
		ΔP (mS)	0,01	0,01	0,01	0,01	0,03	0,05	0,05	0,05	0,22	0,18	0,33
	70/50 °C	Q (kW)	2,0	3,0	3,0	4,8	11,4	13,0	13,0	13,0	23,5	37,0	37,0
		M (lt/h)	34	52	52	82	196	224	224	224	404	636	636
		V (m^3/h)	0,1	0,1	0,1	0,2	0,5	0,6	0,6	0,6	1,0	1,6	1,6
		ΔP (mS)	0,01	0,01	0,01	0,01	0,01	0,01	0,01	0,01	0,06	0,12	0,15

Q (kW) : Maximum coil thermal power according to operating temperature.
M (lt/h) : Continuous hot water flow rate that can be produced at maximum heat power.
V (m^3/h) : The circulation pump flow rate required to provide the kW and lt/h values given above.
ΔP (mS) : m^3/h water pressure loss due to circulation within the coil.

MIT Double Serpentines Water Heater Tank

2.5. MIT Double Serpentines Water Heater Tank, Lower+Upper Coil Fast Water Heater Tank Operating Characteristics

		Boiler	MIT 162	MIT 202	MIT 302	MIT 402	MIT 502	MIT 802	MIT 1002	MIT 1502	MIT 2002	MIT 2502	MIT 3002
10/45 °C	90 °C	Q (kW)	53,6	64,7	64,7	80,6	138,7	168,9	168,9	191,4	229,2	296,4	331,0
		M (lt/h)	1317	1589	1589	1980	3409	4149	4149	4704	5632	7284	8133
	80 °C	Q (kW)	40,8	49,3	49,3	61,6	106,9	131,7	131,7	148,2	185,7	240,5	269,1
		M (lt/h)	1003	1212	1212	1515	2626	3235	3235	3641	4564	5910	6613
	70 °C	Q (kW)	30,8	37,2	37,2	46,6	81,4	99,9	99,9	113,6	143,2	185,1	208,8
		M (lt/h)	757	914	914	1146	2000	2455	2455	2792	3518	4549	5129
10/60 °C	90 °C	Q (kW)	45,8	55,4	55,4	69,3	120,0	146,5	146,5	166,0	207,6	269,0	301,3
		M (lt/h)	788	952	952	1192	2064	2520	2520	2855	3571	4627	5183
	80 °C	Q (kW)	34,7	41,3	41,3	52,1	87,2	107,1	107,1	121,8	153,7	199,2	223,3
		M (lt/h)	596	710	710	896	1500	1842	1842	2094	2644	3427	3841
	70 °C	Q (kW)	9,8	13,4	13,4	18,5	40,7	53,5	53,5	64,0	88,4	112,8	133,7
		M (lt/h)	171	235	235	325	714	939	939	1123	1551	1980	2347
		V (m^3/h)	7,0	7,0	7,0	7,0	7,0	7,0	7,0	7,0	7,0	9,3	9,3
		ΔP (mS)	1,12	1,37	1,37	1,74	3,48	4,42	4,42	5,15	6,41	6,54	7,63

2.6. MIT Double Serpentines Water Heater Tank, Lower+Upper Coil ΔT= 20 °C Operating Characteristics

		Boiler	MIT 162	MIT 202	MIT 302	MIT 402	MIT 502	MIT 802	MIT 1002	MIT 1502	MIT 2002	MIT 2502	MIT 3002
10/45 °C	90/70 °C	Q (kW)	40,0	50,8	50,8	67,2	133,6	158,2	158,2	158,2	158,2	210,5	210,5
		M (lt/h)	1003	1274	1274	1685	3350	3966	3966	3966	3966	5278	5278
		V (m^3/h)	1,8	2,2	2,2	3,0	5,9	7,0	7,0	7,0	7,0	9,3	9,3
		ΔP (mS)	0,11	0,18	0,18	0,39	2,49	4,42	4,42	5,15	6,90	6,54	7,63
	80/60 °C	Q (kW)	27,2	35,0	35,0	46,8	94,6	122,7	122,7	144,9	158,2	210,5	210,5
		M (lt/h)	682	878	878	1172	2371	3076	3076	3633	3966	5278	5278
		V (m^3/h)	1,2	1,5	1,5	2,1	4,2	5,4	5,4	6,4	7,0	9,3	9,3
		ΔP (mS)	0,06	0,11	0,11	0,20	1,33	2,64	2,64	4,06	6,41	6,17	7,20
	70/50 °C	Q (kW)	17,4	22,6	22,6	30,8	64,3	84,2	84,2	99,9	137,2	175,6	207,0
		M (lt/h)	437	566	566	773	1613	2111	2111	2505	3441	4403	5190
		V (m^3/h)	0,8	1,0	1,0	1,3	2,8	3,7	3,7	4,4	6,0	7,7	9,1
		ΔP (mS)	0,02	0,04	0,04	0,10	0,60	1,25	1,25	2,21	4,94	4,47	7,20
10/60 °C	90/70 °C	Q (kW)	32,1	41,3	41,3	54,9	133,6	143,0	143,0	158,2	158,2	210,5	210,5
		M (lt/h)	563	725	725	963	3350	2511	2511	2776	2776	3695	3695
		V (m^3/h)	1,4	1,8	1,8	2,4	5,9	6,3	6,3	7,0	7,0	9,3	9,3
		ΔP (mS)	0,08	0,13	0,13	0,25	2,49	3,48	3,48	5,15	6,90	6,54	7,63
	80/60 °C	Q (kW)	19,8	25,6	25,6	34,9	72,1	93,0	93,0	110,5	152,4	195,4	210,5
		M (lt/h)	347	449	449	612	1266	1633	1633	1939	2674	3429	3695
		V (m^3/h)	0,9	1,1	1,1	1,5	3,2	4,1	4,1	4,9	6,7	8,6	9,3
		ΔP (mS)	0,02	0,05	0,05	0,14	0,73	1,68	1,68	2,47	6,41	5,44	7,20
	70/50 °C	Q (kW)	9,8	13,4	13,4	18,5	40,7	53,5	53,5	64,0	88,4	112,8	133,7
		M (lt/h)	171	235	235	325	714	939	939	1123	1551	1980	2347
		V (m^3/h)	0,4	0,6	0,6	0,8	1,8	2,3	2,3	2,8	3,9	4,9	5,8
		ΔP (mS)	0,00	0,01	0,01	0,02	0,31	0,59	0,59	0,89	2,29	1,86	3,27

Q (kW) : Maximum coil thermal power according to operating temperature.
M (lt/h) : Continuous hot water flow rate that can be produced at maximum heat power.
V (m^3/h) : The circulation pump flow rate required to provide the kW and lt/h values given above.
ΔP (mS) : m^3/h water pressure loss due to circulation within the coil.

2.7. MIT Double Serpentines Water Heater Tank, Heat Pump Application

2.7.1. Upper Coil Heat Pump Operating Characteristics

		Boiler	MIT 162	MIT 202	MIT 302	MIT 402	MIT 502	MIT 802	MIT 1002	MIT 502	MIT 2002	MIT 2502	MIT 3002
30/45 °C	55/50 °C	Q (kW)	3,7	5,1	5,1	6,5	12,0	13,4	13,4	13,4	21,9	26,7	33,0
		M (lt/h)	93	128	128	163	300	335	335	335	548	671	828
		V (m^3/h)	0,6	0,9	0,9	1,1	2,1	2,3	2,3	2,3	3,8	4,7	5,8
		ΔP (mS)	0,00	0,01	0,01	0,03	0,14	0,20	0,20	0,20	0,76	0,59	0,98

For pumps with 8kW nominal heating power we recommend MIT 502 water heater tank, for 16kW we recommend MIT 2002.

2.7.2. Upper and Lower Serial Connected Coil Heat Pump Operating Characteristics

		Boiler	MIT 162	MIT 202	MIT 302	MIT 402	MIT 502	MIT 802	MIT 1002	MIT 1502	MIT 2002	MIT 2502	MIT 3002
10/45 °C	55/50 °C	Q (kW)	10,6	13,4	13,4	17,7	34,7	40,1	40,1	40,1	40,1	53,5	53,5
		M (lt/h)	265	335	335	443	869	1006	1006	1006	1006	1341	1341
		V (m^3/h)	1,8	2,3	2,3	3,1	6,0	7,0	7,0	7,0	7,0	9,3	9,3
			0,11	0,20	0,20	0,39	2,49	4,42	4,42	5,15	6,90	6,54	7,63

For pumps with 12kW nominal heating power we recommend MIT 202 water heater tank, and 16kW we recommend MIT 502.

Q (kW) : Recommended operating conditions are +7 °C outdoor environment -35 °C water temperature for the heating pumps at their nominal thermal power.
M (lt/h) : Continuous hot water flow rate at the rated power of the heat pump (10/45°C).
V (m^3/h) : The circulation pump flow rate required to provide the kW and lt/h values given above.
ΔP (mS) : Boiler coil resistance at m^3/h circulation pump flow.

2.8. Selecting a Solar Panel According to Water Heater Tanks Coil Area

2.8.1. MIT Water Heater Tanks Lower Coil Solar Energy Application Operating Characteristics

		Boiler	MIT 162	MIT 202	MIT 302	MIT 402	MIT 502	MIT 802	MIT 1002	MIT 1502	MIT 2002	MIT 2502	MIT 3002
10/45 °C	55/50 °C	Q (kW)	6	8	8	12	28	42	42	54	69	90	105
		M (lt/h)	3,6	4,8	4,8	7,2	17,0	25,2	25,2	32,4	41,5	54,4	63,0
		V (m^3/h)	0,3	0,4	0,4	0,6	1,48	2,19	2,19	2,82	3,61	4,74	5,48
			0,00	0,00	0,00	0,01	0,13	0,30	0,30	0,68	1,32	1,20	1,81

Solar panel with a net collection area of up to 42 m^2 can be connected to the MIT 802 water heater tanks.

2.8.2. MIT Water Heater Tanks Upper + Lower Coil Solar Energy Application Operating Characteristics

		Boiler	MIT 162	MIT 202	MIT 302	MIT 402	MIT 502	MIT 802	MIT 1002	MIT 1502	MIT 2002	MIT 2502	MIT 3002
10/45 °C	55/50 °C	Q (kW)	16	20	30	32	52	68	68	89	107	146	163
		M (lt/h)	9,6	12,0	18,1	19,5	31,2	41,0	41,0	53,8	64,4	88,0	98,0
		V (m^3/h)	0,8	1,0	1,6	1,7	2,7	3,6	3,6	4,7	5,6	7,7	8,5
			0,02	0,05	0,10	0,14	0,55	1,27	1,27	2,31	4,45	4,37	6,41

If the lower and upper coils of the MIT 802 boiler are connected in series, solar collectors with a net panel size of up to 68 m^2 can be connected.

A (m^2) : Maximum panel size with Cu/Cu-selective surface and prismatic glass that can be connected to the boiler.
Q (kW) : The maximum net panel size of the solar panel and the maximum instantaneous heat energy that can be attained according to the boiler model.
V (m^3/h) : The circulation pump flow rate required to provide the m2 and kW values given above.
ΔP (mS) : m^3/h water pressure loss due to circulation within the coil.

Panel size that have been given above according to boiler and coil size, show the thermal power of the boiler coil. The values in the GE volume sheet take precedence for the recommended boiler volumes according to the panel size. Given m2 values and kW values has been calculated according to the monthly averages of the annual data provided by T. C. Directorate of Meteorology. It varies by ±15% yearly .

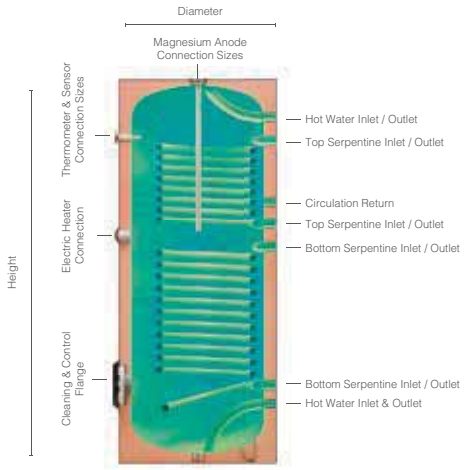

	Unit	MIT 162	MIT 202	MIT 302	MIT 502	MIT 802	MIT 1002	MIT 1502	MIT 2002	MIT 2502	MIT 3002
Volume	lt	160	200	300	500	800	1000	1500	2000	2500	3000
Diameter	mm	590	590	700	750	900	1000	1120	1260	1460	1460
Height	mm	1125	1320	1210	1800	2100	2070	2300	2230	2200	2560
Electric Heater Connection	inch	1 1/2"	1 1/2"	1 1/2"	1 1/2"	2"	2"	2"	2"	2"	2"
Cleaning & Control Flange	inch	4"	4"	4"	4"	5"	5"	5"	5"	5"	5"
Hot Water Inlet and Outlet	inch	3/4"	3/4"	1"	1"	1 1/4"	1 1/4"	1 1/4"	1 1/4"	1 1/2"	1 1/2"
Circulation Return	inch	3/4"	3/4"	1"	1"	1 1/4"	1 1/4"	1 1/4"	1 1/4"	1 1/2"	1 1/2"
Top Serpentine Inlet / Outlet	inch	1 1/4"	1 1/4"	1 1/4"	1 1/4"	1 1/4"	1 1/4"	1 1/4"	1 1/4"	1 1/2"	1 1/2"
Bottom Serpentine Inlet / Outlet	inch	1 1/4"	1 1/4"	1 1/4"	1 1/4"	1 1/4"	1 1/4"	1 1/4"	1 1/4"	1 1/2"	1 1/2"
Insulation Type & Thickness	mm	PU/50	PU/50	PU/50	PU/50	PU/80	PU/80	PU/80	PU/80	PU/80	PU/80
Gross Weight	kg	95	112	132	223	290	318	417	640	812	925
Rollover Measure	mm	1290	1465	1420	1970	2305	2320	2580	2580	2660	3020
Magnesium Anode Connection Dimensions	inch	1 1/4"	1 1/4"	1 1/4"	1 1/4"	1 1/4"	1 1/4"	1 1/4"	1 1/4"	1 1/4"	1 1/4"
Thermometer & Sensor Connection Sizes	inch	1/2"	1/2"	1/2"	1/2"	1/2"	1/2"	1/2"	1/2"	1/2"	1/2"

Double Serpentines Water Heater Tank Connection Diagram

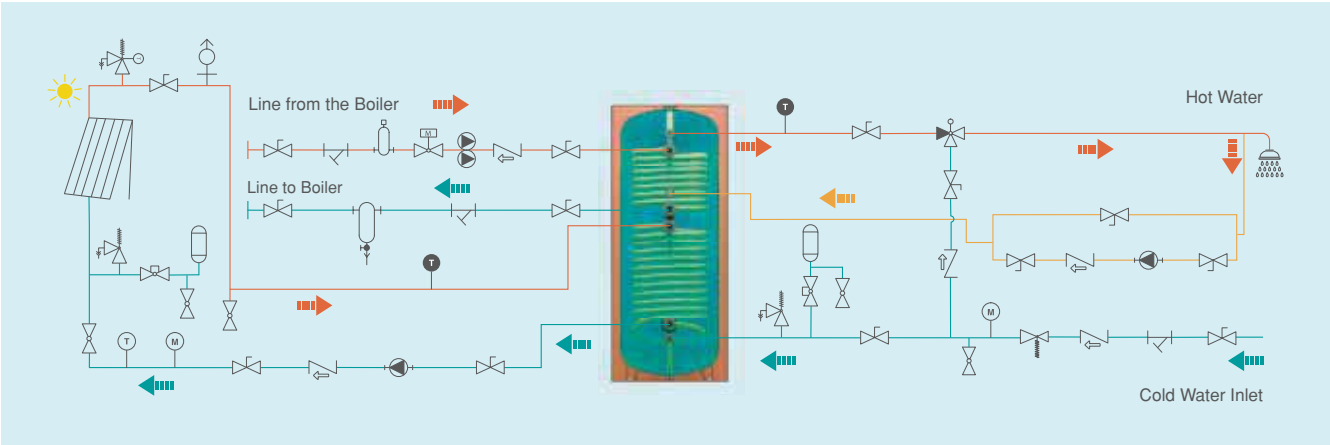

MIT Water Heater Tanks With Electrical Resistance

Electrical water heater tank is used to meet the hot water requirement by using electric energy in places without fluid source.

Volume	100 lt – 5000 lt
Capacity	2 kW – 60 kW (For capacities above 60 kW, please contact us.)
Maximum Working Temperature	95 °C
Body Pressure	10 Bar
Interior Surface Coating	Glasslined enamel is applied according to DIN 4753-3 standard.
Insulation 100L-500L 800L-1000L 800L-5000L	Complies with EN 15332 Energy Efficiency Standard 42 kg/m³ HCFC free water based hard polyurethane 18 kg/m³ Soft polyurethane 26 kg/m³ Flame retardant soft polyurethane (Optional)
Outer Sheath Coating 100L-500L 800L-5000L	 Electrostatic Powder Coated Sheet / Vinyl Artificial Leather Vinyl Artificial Leather
Thermometer	0 °C – 120 °C
Cleaning Flange	All types of cleaning and inspection cover are available.
Electric Heater	An optional electric heater is available. (2 - 60 kW)
Leakage Relay	It is possible to install residual current relay as an option.
Cathodic Protection Element	Magnesium Anode according to DIN 4753-3 standard (Optional electronic anode application)

Capacity (lt)	Power (kW)	Hot Water Capacity (lt/h) 10 °C - 45 °C
100	1x3	98
160	2x3	147
200	2x7,5	196
300	2x7,5	345
500	2x10	491
800	2x15	740
1000	3x15	1105
1500	4x15	1475
2000	5x15	1850
2500	7x15	2580
3000	7x15	2948
4000	7x15	3685
5000	7x15	4791
6000	7x15	5897

The above values are based on 220V - 380V 50 Hz mains voltage.

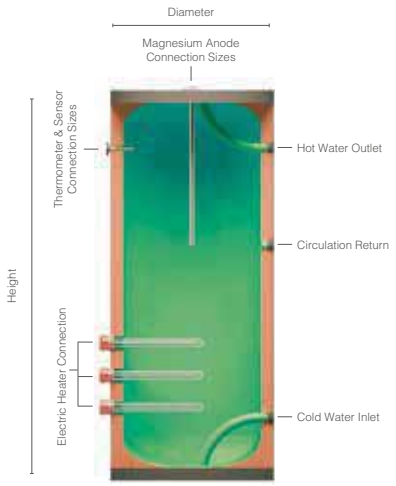

	Unit	MIT 103	MIT 163	MIT 203	MIT 303	MIT 503	MIT 803	MIT 1003	MIT 1503	MIT 2003	MIT 2503	MIT 3003	MIT 4003	MIT 5003
Volume	lt	100	160	200	300	500	800	1000	1500	2000	2500	3000	4000	5000
Diameter	mm	490	590	590	700	750	900	1000	1120	1260	1460	1460	1660	1660
Height	mm	1080	1125	1320	1210	1800	2100	2070	2300	2230	2200	2560	2665	3100
Electric Heater Connection	inch	According to customer demand, heater selection is made.												
Cold Water Inlet	inch	3/4"	3/4"	3/4"	1"	1"	1 1/4"	1 1/4"	1 1/4"	1 1/4"	1 1/2"	1 1/2"	1 1/2"	1 1/2"
Hot Water Outlet	inch	3/4"	3/4"	3/4"	1"	1"	1 1/4"	1 1/4"	1 1/4"	1 1/4"	1 1/2"	1 1/2"	1 1/2"	1 1/2"
Circulation Return	inch	3/4"	3/4"	3/4"	3/4"	3/4"	1"	1"	1"	1"	1"	1 1/4"	1 1/4"	1 1/4"
Insulation Type & Thicknes	mm	PU/50	PU/50	PU/50	PU/50	PU/50	PU/80	PU/80	PU/80	PU/80	PU/80	PU/80	PU/80	PU/80
Gross Weight	kg	The weights of the products vary according to the heater. The product without the heater weighs the storage tank.												
Rollover Measure	mm	1205	1290	1465	1420	1970	2300	2320	2580	2580	2660	3020	3160	3535
Thermometer & Sensor Connection Dimensions	inch	1/2"	1/2"	1/2"	1/2"	1/2"	1/2"	1/2"	1/2"	1/2"	1/2"	1/2"	1/2"	1/2"
P&T Valve	inch	3/4"	3/4"	3/4"	3/4"	3/4"	3/4"	3/4"	3/4"	3/4"	3/4"	3/4"	3/4"	3/4"
Magnesium Anode Connection	inch	1 1/4"	1 1/4"	1 1/4"	1 1/4"	1 1/4"	1 1/4"	1 1/4"	1 1/4"	1 1/4"	1 1/4"	1 1/4"	1 1/4"	1 1/4"

MIT Water Heater Tanks With Electrical Resistance Connection Diagram

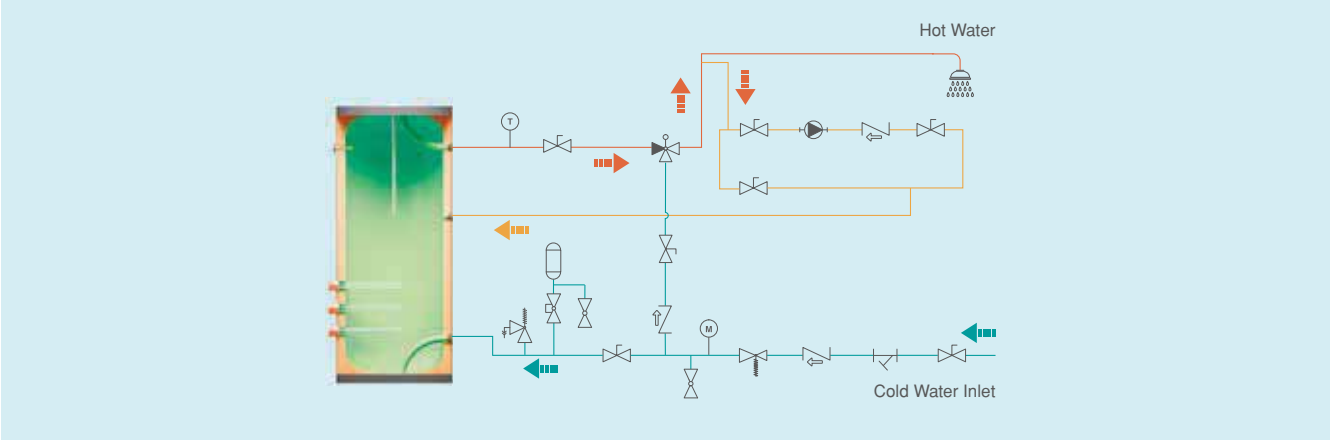

EKİN ENDÜSTRİYEL

WATER STORAGE
TANKS

PRESSURE VESSELS

MIT Accumulation Tanks

Hot water storage tanks are used in villas, hotels, buildings, restaurants, factories and other places where hot water is needed.

Volume	100lt – 5000lt
Maximum Working Temperature	95 °C
Body Pressure	10 Bar
Interior Surface Coating	Glasslined enamel is applied according to DIN 4753-3 standard.
Insulation 100L-500L 800L-1000L 800L-5000L 800L-5000L	Complies with EN 15332 Energy Efficiency Standard 42 kg/m³ HCFC free water based hard polyurethane 18 kg/m³ Soft polyurethane 18 kg/m³ Soft polyurethane 26 kg/m³ Flame retardant soft polyurethane (Optional)
Outer Sheath Coating 100L-500L 800L-5000L	Electrostatic Powder Coated Sheet / Vinyl Artificial Leather Vinyl Artificial Leather.
Thermometer	0 °C – 120 °C
Cleaning Flange	All types of cleaning and inspection cover are available.
Electric Heater	An optional electric heater is available.
Cathodic Protection Element	Magnesium Anode according to DIN 4753-3 (Optional anode application)

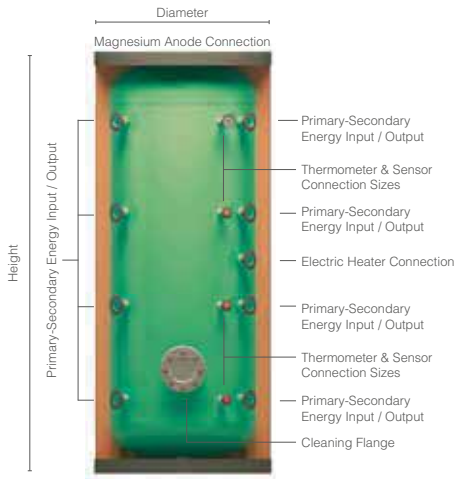

	Unit	MIT 104	MIT 164	MIT 204	MIT 304	MIT 504	MIT 804	MIT 1004	MIT 1504	MIT 2004	MIT 2504	MIT 3004	MIT 4004	MIT 5004
Volume	lt	100	160	200	300	500	800	1000	1500	2000	2500	3000	4000	5000
Diameter	mm	490	590	590	700	750	900	1000	1120	1260	1460	1460	1660	1660
Height	mm	1080	1125	1320	1210	1800	2100	2070	2300	2230	2200	2560	2665	3100
Primary-Secondary Energy Inlet / Outlet	inch	1"	1 1/4"	1 1/4"	1 1/4"	1 1/4"	1 1/2"	1 1/2"	1 1/2"	1 1/2"	2"	2"	3"	3"
Cleaning Flange	inch	4"	4"	4"	4"	4"	5"	5"	5"	5"	5"	5"	5"	5"
Electric Heater Connection	inch	1 1/2"	1 1/2"	1 1/2"	1 1/2"	1 1/2"	2"	2"	2"	2"	2"	2"	2"	2"
Insulation Type	mm	PU/50	PU/50	PU/50	PU/50	PU/50	S/80	S/80	S/80	S/80	S/80	S/80	S/80	S/80
Gross Weight	kg	57	74	81	99	155	225	237	332	472	562	622	762	882
Rollover Measure	mm	1205	1290	1465	1420	1970	2300	2320	2580	2580	2660	3220	3160	3535
Thermometer & Sensor Connection Sizes	inch	1/2"	1/2"	1/2"	1/2"	1/2"	1/2"	1/2"	1/2"	1/2"	1/2"	1/2"	1/2"	1/2"
Magnesium Anode Connections	inch	1 1/4"	1 1/4"	1 1/4"	1 1/4"	1 1/4"	1 1/4"	1 1/4"	1 1/4"	1 1/4"	1 1/4"	1 1/4"	1 1/4"	1 1/4"

Accumulation Tank Connection Diagram

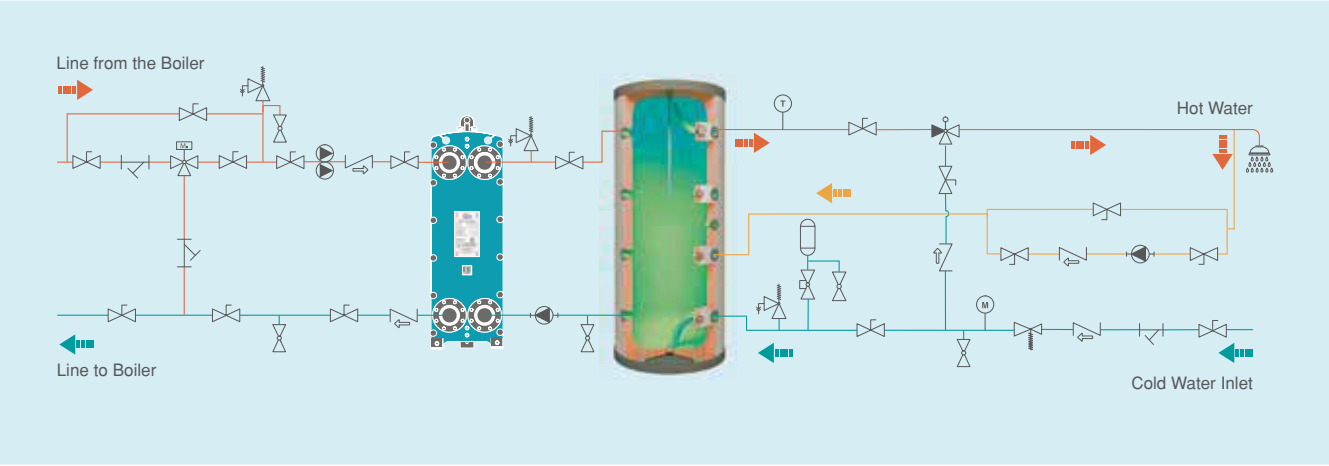

Cathodic Protection (CP)

Cathodic protection (CP) is a technique that prevents corrosion of a metal surface by protecting the system's cathode. Cathodic protection (CP) systems are most commonly used to protect underwater structures such as steel, ship hulls, buried pipelines, storage tanks, steel pier piles, ships, offshore oil platforms, and onshore oil well casings.

Generally, cathodic protection (CP) is achieved by two methods; these are applications obtained using sacrificial anodes or an impressed current system.

To determine the most suitable anode for your system, you can review our catalog that shows most of the standard sacrificial anodes and impressed current system materials.
If you do not see the anode/material you want, please contact us so that we can select the appropriate material for you.

Sacrificial Magnesium Anodes

Sacrificial magnesium anodes are widely used for cathodic protection in underground steel pipelines, tanks, boilers, condensers, aquatic components, heat exchangers, ship hulls and marine structures because it has the greatest flow potential to the cathode relative to other metals.

1. Rolled Magnesium Anode Rod for Water Heater

Extruded magnesium anodes are generally used in small diameter anode requirements such as water heaters, boilers, water storage tanks, heat installations and gas stations CP systems.

CHEMICAL COMPOSITION OF EXTRUDED ANODE FOR WATER HEATER %											
Alloy	Al	Mn	Zn	Ca (Max)	Si (Max)	Cu (Max)	Ni (Max)	Fe (Max)	Other Imp.		Mg
									Each	Total	
AZ31B	2.5- 3.5	0.2 - 1.0	0.6-1.4	0.04	0.10	0.01	0.001	0.005	---	0.30	Bal.
Mg-Mn	0.01 Max	0.5 - 1.3	---	---	---	0.02	0.001	0.03	0.05	0.30	Bal.

Rolled Magnesium Anode Drawings

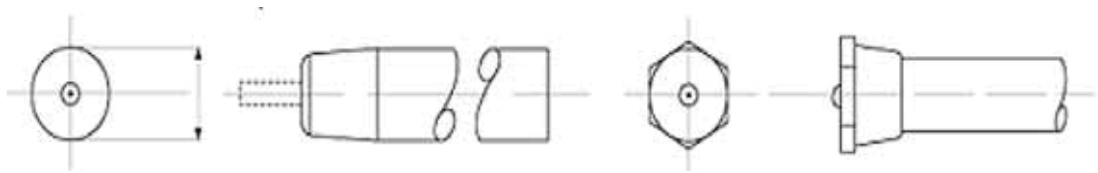

EXTRUDED MAGNESIUM ANODE SPECIFICATION AND DIMENSION				
Diameter (inch)	Core Eccentric (inch)	Core Diameter (inch)	Straightness (inch/ 2 ft length)	Weight (lbs/inch)
0.675	0.050	0.135	0.060	0.025
0.750	1/16	0.135	0.040	0.031
0.800	1/16	0.135	0.040	0.035
0.840	1/16	0.135	0.040	0.038
0.900	1/16	0.135	0.040	0.043
1.050	1/16	0.135	0.040	0.057
1.315	1/16	0.135	0.040	0.089

*Special productions can be made in accordance with customer requirements.

2. Cast Magnesium Anode Rod for Water Heater

Magnesium anode rod is designed to provide a longer life for water heaters and boilers. It is a solution for pre-diagnosing water, sediment control and other specific problems. MIT supplies the water heater magnesium anode rod in accordance with the NF EN 12438 standard.

CHEMICAL COMPOSITION PERCENTAGE OF CAST ANODE ROD FOR WATER HEATER %									
Mixture	Al	Zn	Mn	Si (Max)	Cu (Max)	Ni (Max)	Fe (Max)	Total of Impurities (Max)	Mg
AZ63B	5.30-6.70	2.50-3.50	0.15-0.70	0.10	0.02	0.002	0.003	0.30	Bal.

ELECTROCHEMICAL PROPERTIES OF CAST ANODE			
Voltage When Turned On (-V)	Voltage When Turned Off (-V)	Real Capacity (A.h/kg)	Efficiency (%)
1.50-1.60	1.45-1.55	1,100 Min	55 Min.

Cast Magnesium Anode Drawing

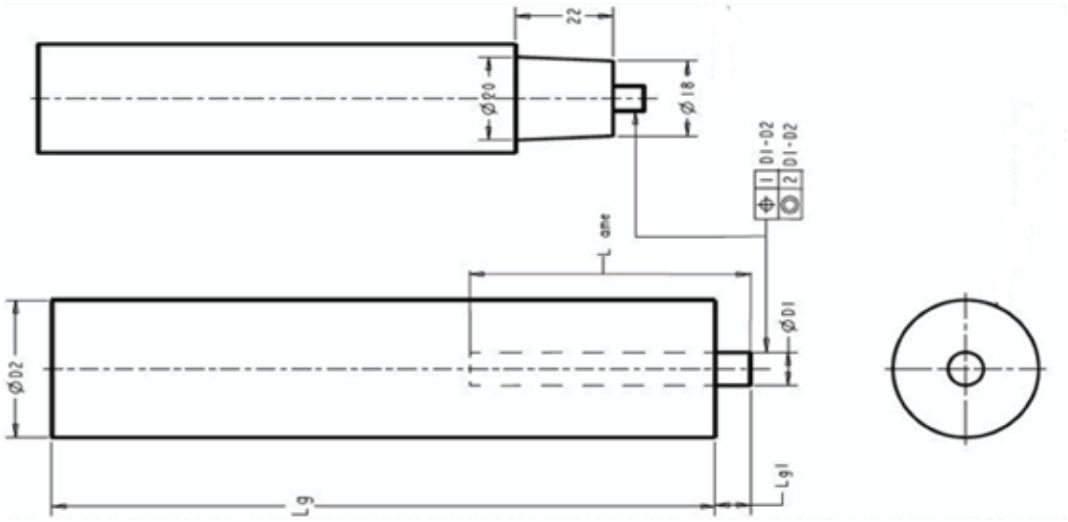

CHARACTERISTICS AND DRAWINGS OF CAST MAGNESIUM ANODES (MM)					
Type	ØD1	ØD2	Lg	Lg1	Lg dme
A-1	M8	26	120	10	90
A-2	M8	26	160	10	90
A-3	M8	26	186	10	90
A-4	M8	26	252	10	90
A-5	M8	26	322	10	90
B-1	M6	26	130	6.5	100
B-2	M6	26	250	6.5	100
B-3	M6	16	200	6.5	100
B-4	M6	16	250	6.5	100
B-5	M6	16	400	6.5	100
C-1	M8	33	500	10	90
C-2	M8	33	286	10	90

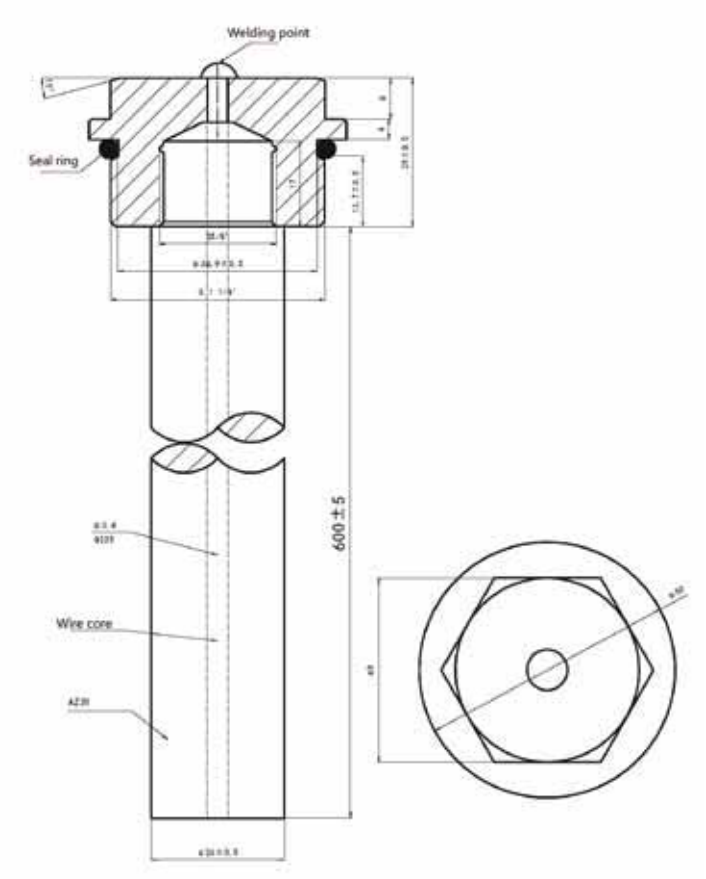

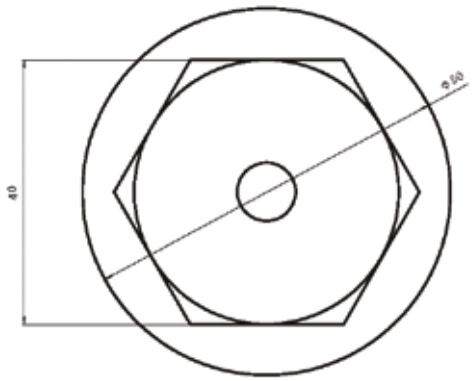

Notes
1. Threaded Cap Q235 Galvanized
2. Wire Core: Q235
3. Anode Alloy: AZ31 Mg Alloy

In order for your installation to last longer, your anode rod should be checked every 6 months and changed at least once a year, depending on the situation.

EKİN ENDÜSTRİYEL

BUFFER TANKS

PRESSURE VESSELS

MIT Buffer Tank With No-Baffle/Thermal Balance Tank

The buffer tank system used in all cooling systems that must be separated by heat exchangers such as residences, workplaces and hotels is also used in chilled water applications to increase the water volume extra.

Volume	100 lt – 5000 lt (For larger pressure and volume buffer tanks can be manufactured in particular.)
Maximum Working Temperature	95 °C
Operating Pressure	6 Bar
Connection Flange / Pressure Class	DN 50 – DN 300 / PN16
Interior Surface Coating	Buffer tanks are made of high quality S235JR (TS EN 10025) and high corrosion resistance steel.
Insulation 100L-500L 800L-5000L 800L-5000L	Complies with EN 15332 Energy Efficiency Standard 18 kg/m^3 Soft polyurethane 18 kg/m^3 Soft polyurethane 26 kg/m^3 Flame retardant soft polyurethane (Optional)
Outer Sheath Coating 100L-500L 800L-5000L	 Vinyl Artificial Leather Vinyl Artificial Leather

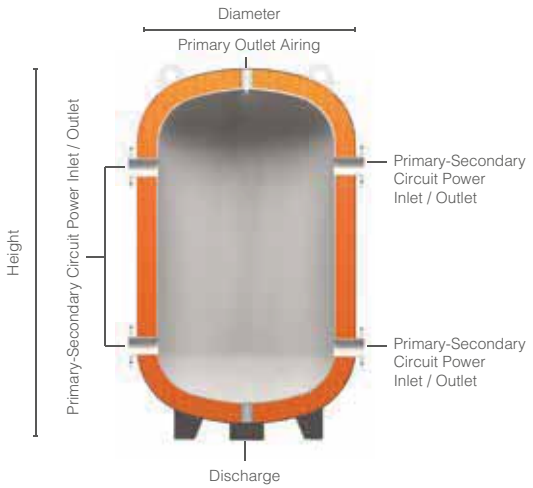

	Unit	MIT-B 104	MIT-B 304	MIT-B 504	MIT-B 804	MIT-B 1004	MIT-B 1504	MIT-B 2004	MIT-B 2504	MIT-B 3004	MIT-B 4004	MIT-B 5004
Volume	lt	100	300	500	800	1000	1500	2000	2500	3000	4000	5000
Diameter	mm	540	760	800	910	1010	1120	1260	1460	1460	1660	1660
Height	mm	1160	1285	1830	2130	2100	2440	2370	2260	2660	2700	3100
Primary-Secondary Energy Inlet / Outlet	inch / DN	1 1/2"	2"	2 1/2"	DN 80	DN 100	DN 125	DN 125	DN 150	DN 150	DN 200	DN 200
Discharge	inch	1 1/4"	1 1/2"	1 1/2"	2"	2"	2"	2"	2 1/2"	2 1/2"	2 1/2"	2 1/2"
Insulation Type & Thickness	mm	S/80	S/80	S/80	S/80	S/80	S/80	S/80	S/80	S/80	S/80	S/80
Gross Weight	kg	48	84	140	372	471	746	847	1198	1258	1774	1894
Rollover Measure	mm	1290	1515	2020	2335	2350	2700	2585	2710	3050	3190	3555
Primary Outlet Airing	inch	1 1/4"	1 1/4"	1 1/4"	1 1/4"	1 1/4"	1 1/4"	1 1/4"	1 1/4"	1 1/4"	1 1/4"	1 1/4"

Buffer Tank With No-Baffle Connection Diagram

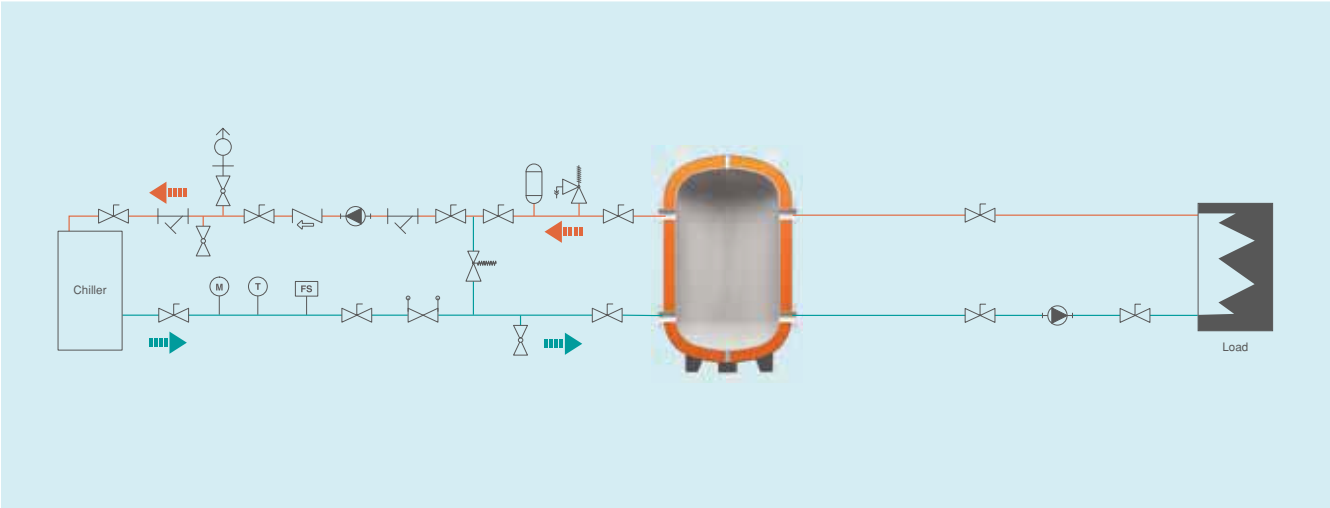

Depending on the customer request, 800 lt to 3000 lt capacity can be made with polyurethane insulation and galvanized steel electrostatic powder coating.

MIT Buffer Tanks With Baffle

The buffer tank system used in all cooling systems that must be separated by heat exchangers such as residences, workplaces and hotels is also used in chilled water applications to increase the water volume extra.

Volume	100 lt – 5000 lt (For larger pressure and volume buffer tanks can be manufactured in particular.)
Maximum Working Temperature	95 °C
Operating Pressure	6 Bar
Connection Flange / Pressure Class	DN 50 – DN 300 / PN16
Interior Surface Coating	Buffer tanks are made of high quality S235JR (TS EN 10025) high corrosion resistance steel.
Insulation 100L-5000L 100L-5000L	Complies with EN 15332 Energy Efficiency Standard 18 kg/m³ Soft polyurethane 26 kg/m³ Flame retardant soft polyurethane (Optional)
Outer Sheath Coating 100L-5000L	Vinyl Artificial Leather

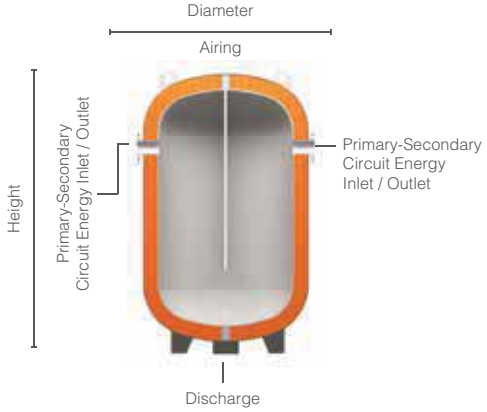

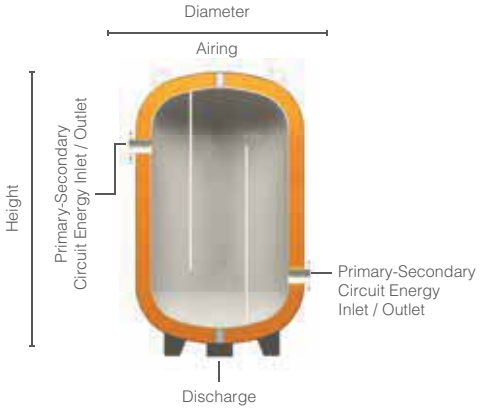

	Unit	MIT-PB 104	MIT-PB 304	MIT-PB 504	MIT-PB 804	MIT-PB 1004	MIT-PB 1504	MIT-PB 2004	MIT-PB 2504	MIT-PB 3004	MIT-PB 4004	MIT-PB 5004
Number of Baffles	piece	1				2				3		
Volume	lt	100	300	500	800	1000	1500	2000	2500	3000	4000	5000
Diameter	mm	540	760	910	910	1010	1120	1260	1460	1460	1660	1660
Height	mm	1160	1285	1540	2130	2100	2440	2370	2260	2660	2700	3100
Primary-Secondary Energy Inlet / Outlet	DN	50	50	65	80	100	125	125	150	150	200	200
Airing	inch	1/2"	1/2"	1/2"	1/2"	3/4"	3/4"	3/4"	3/4"	3/4"	3/4"	3/4"
Discharge	inch	3/4"	3/4"	1"	1"	1 1/4"	1 1/2"	1 1/2"	2"	2"	2"	2"
Gross Weight	kg	62	108	180	248	395	395	535	636	756	912	1080
Rollover Measure	mm	1290	1515	2000	2335	2700	2700	2585	2710	3050	3190	3555

MIT Buffer Tanks With Baffle Connection Diagram

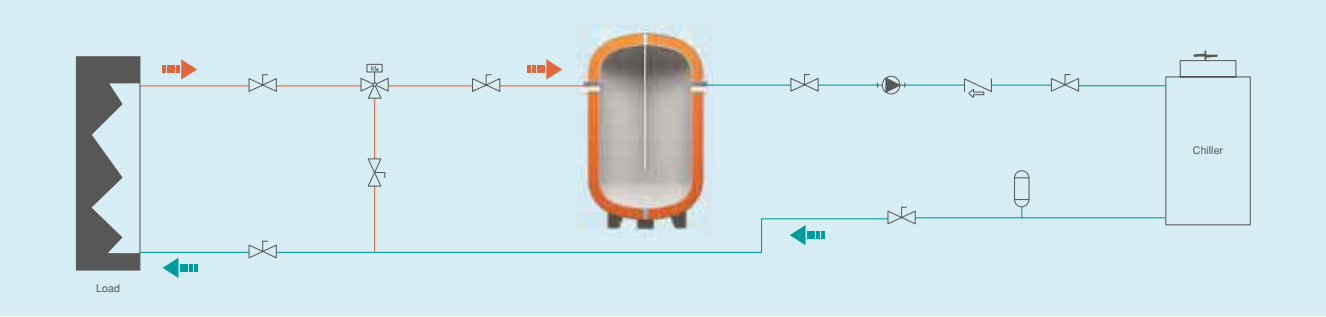

Solar Panel	Temperature Display	Pressure Display	Switch Flow	Pump	Twin Pump	Check Valve	Air Relief Cock
Bypass Vanası	Pressure Breaker	Dirt Holder	Discharge Valve	3 Way Valve	Sediment Holder	Air Separat	Expansion Tanks with membrane
Balance Valve	Lock Valve	Radiator Valve	Spherical Valve	Pressure Safety Valve	3 Way Prorport. Motor Valve	2 Way Motor Valve	Thermostatic Valve

Depending on the customer request, capacities from 800 lt to 3000 lt can be made with polyurethane insulation and electrostatic powder coating on galvanized steel sheet.

EKİN ENDÜSTRİYEL

EXPANSION **TANKS**

PRESSURE VESSELS

Technical Features of 10 Bar Footless Closed Expansion Tank

Model	Volume	Front Gas Pressure	Connection	Dimensions	
				Diameter	Height
MIT 10 K	8 lt	2	1"	220	320
MIT 10 K	12 lt	2	1"	280	300
MIT 10 K	19 lt	2	1"	280	430
MIT 10 K	24 lt	2	1"	280	470
MIT 10 K	24 lt Sphere	2	1"	360	325
MIT 10 K	35 lt	2	1"	380	470
MIT 10 K	50 lt	4	1"	380	560

Technical Features of 10 Bar Footless Closed Expansion Tank

Model	Volume	Pre-Charge Pressure	Connection	Dimensions	
				Diameter	Height
MIT 10 Y	24 lt	2	1"	280	470
MIT 10 Y	50 lt	4	1"	380	620
MIT 10 Y	60 lt	4	1"	380	670
MIT 10 Y	80 lt	4	1"	430	720
MIT 10 Y	100 lt	4	1"	460	800

MIT Vertical Expansion Tank Series

Technical Features of 10 Bar Footless Closed Expansion Tank

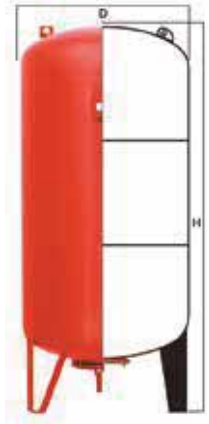

Model	Volume	Pre-Charge Pressure	Connection	Dimensions	
				Diameter	Height
MIT 10	50 lt	4	1"	380	750
MIT 10	60 lt	4	1"	380	810
MIT 10	80 lt	4	1"	430	960
MIT 10	100 lt	4	1"	460	990
MIT 10	150 lt	4	1"	500	1100
MIT 10	200 lt	4	1 1/4"	590	1120
MIT 10	300 lt	4	1 1/4"	640	1230
MIT 10	500 lt	4	1 1/4"	750	1550
MIT 10	750 lt	4	2"	750	1950
MIT 10	750 lt	4	2"	800	1850
MIT 10	900 lt	4	2"	800	1950
MIT 10	1000 lt	4	2"	800	2180
MIT 10	1500 lt	4	2"	960	2380
MIT 10	2000 lt	4	2"	1100	2520
MIT 10	3000 lt	4	2 1/2"	1200	2800
MIT 10	4000 lt	4	3"	1500	2940
MIT 10	5000 lt	4	3"	1500	3600
MIT 10	10000 lt	4	DN100	1600	5750

Technical Features of 16 Bar Vertical Closed Expansion Tank

Model	Volume	Pre-charge Pressure	Connection	Dimensions	
				Diameter	Height
MIT 16	50 lt	4	1"	380	750
MIT 16	60 lt	4	1"	380	810
MIT 16	80 lt	4	1"	430	960
MIT 16	100 lt	4	1"	460	990
MIT 16	150 lt	4	1"	500	1100
MIT 16	200 lt	4	1 1/4"	590	1120
MIT 16	300 lt	4	1 1/4"	640	1230
MIT 16	500 lt	4	1 1/4"	750	1550
MIT 16	750 lt	4	2"	800	1850
MIT 16	900 lt	4	2"	800	1950
MIT 16	1000 lt	4	2"	800	2180
MIT 16	1500 lt	4	2"	960	2380
MIT 16	2000 lt	4	2"	1100	2520
MIT 16	3000 lt	4	2 1/2"	1200	2800
MIT 16	4000 lt	4	3"	1450	3100
MIT 16	5000 lt	4	3"	1450	3720
MIT 16	10000 lt	4	DN100	1600	5750

Technical Features of 25 Bar Vertical Closed Expansion Tank

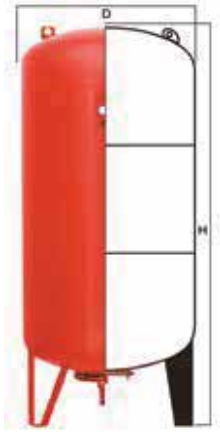

Model	Volume	Pre-charge Pressure	Connection	Dimensions	
				Diameter	Height
MIT 25	50 lt	4	1"	380	750
MIT 25	60 lt	4	1"	380	810
MIT 25	80 lt	4	1"	450	910
MIT 25	100 lt	4	1"	450	990
MIT 25	150 lt	4	1"	500	1100
MIT 25	200 lt	4	1 1/4"	600	1120
MIT 25	300 lt	4	1 1/4"	640	1230
MIT 25	500 lt	4	1 1/4"	750	1550
MIT 25	750 lt	4	2"	800	1850
MIT 25	900 lt	4	2"	800	1950
MIT 25	1000 lt	4	2"	800	2180
MIT 25	1500 lt	4	2"	960	2380
MIT 25	2000 lt	4	2"	1100	2520
MIT 25	3000 lt	4	2 1/2"	1200	2800
MIT 25	4000 lt	4	3"	1450	3100
MIT 25	5000 lt	4	3"	1450	3720
MIT 25	10000 lt	4	DN100	1600	5750

Technical Details of Membranes

- The membranes, which are used in our tanks, are manufactured from EPDM and BUTYL rubber materials.
- EPDM membranes are used in our expansion tanks which is from 8 Lt to 4000 Lt.
- BUTYL Membrane is used in our 5000 Lt and over capacity expansion tanks.
- EPDM Membrane is resistant to +10 / +110 °C.
- BUTYL Membrane is sliding up to +10 / +130 °C.
- The membranes used in our expansion tanks can be used in all drinking water.

Dimension and Capacity	Rubber Material	Flange (mm)	Height (mm)
MIT 8-12 lt	EPDM	80-110	195
MIT 18-24 lt	EPDM	80-110	248
MIT 35-60 lt	EPDM	80-110	315
MIT 80-100 lt	EPDM	80-110	700
MIT 150 lt	EPDM	80-110	750
MIT 200 lt	EPDM	150-210	800
MIT 300 lt	EPDM	150-210	1000
MIT 500 lt	EPDM	150-210	1400
MIT 750 lt	EPDM	150-210	1600
MIT 1000 lt	EPDM	200-250	2000
MIT 1500 lt	EPDM	200-250	2000
MIT 2000 lt	EPDM	200-250	2000
MIT 8-12 lt	BUTYL	80-110	195
MIT 18-24 lt	BUTYL	80-110	248
MIT 35-60 lt	BUTYL	80-110	315
MIT 80-100 lt	BUTYL	80-110	700
MIT 150 lt	BUTYL	80-110	750
MIT 200 lt	BUTYL	150-210	800
MIT 300 lt	BUTYL	150-210	1000
MIT 500 lt	BUTYL	150-210	1400
MIT 750 lt	BUTYL	150-210	1600
MIT 1000 lt	BUTYL	200-250	2000
MIT 1500 lt	BUTYL	200-250	2000
MIT 2000 lt	BUTYL	200-250	2000
MIT 3000 lt	BUTYL	150-210	2515
MIT 4000 lt	BUTYL	250-300	2680
MIT 5000 lt	BUTYL	150-210, 250-300	3440
MIT 10000 lt	BUTYL	150-210, 250-300	5655

EKİN ENDÜSTRİYEL

EKİN ENDÜSTRİYEL

STAINLESS STEEL
PROCESS TANKS

PRESSURE VESSELS

MIT Stainless Steel Water Storage and Water Heater Tanks

MIT, one of the most known and preferred brands of Turkey, has been continuing to create new ideas and developments to improve plate heat exchanger sector.

Ekin aims to develop its product range and the most concrete proof of this determination is MIT stainless tanks.

Since the day it is founded with the philosophy of "We have a dream", Ekin personnel, who work nonstop, have been realizing that the dream is becoming true and they raise the bar and continue chasing their dreams.

Why Should I Use Stainless Steel Tanks?

In order to obtain the water needed hygienically, they can be easily used in all drinking water and food processes due to their material properties. Due to their extremely long life compared to standard pressure tanks it is recommended to use stainless tanks. Our stainless production tanks offer excellent resistance to corrosion, regardless of the hardness of the mains water. These tanks are able to operate in a long life and in a healthy way at the places of use. Customer-dependent designs can be customized.

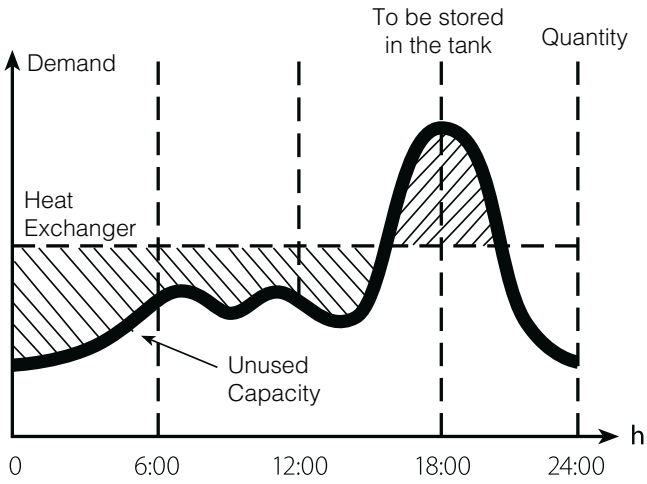

Usage Areas

- Apartments
- Drinking water facilities
- Hospitals
- Dormitories
- Sports facilities
- Factories
- Public buildings

Wherever there is a need for hot water, an accumulation tank is used.

Stainless Steel Tanks in different capacities from 100 lt to 30.000 lt.

Accessories that can be added according to customer's request

- Safety valve is also mounted on tanks upon request.
- In addition, our stainless tanks are produced with electric control panel upon request.

Horizontal and vertical models are available.

Why Should I Use Stainless Steel Water Heater Tank and Accumulation Tank?

MIT stainless steel tanks are produced by advanced technology and experienced R & D engineers. As the welding method of the products and the pressure applied during the test are produced by increasing the safety coefficients, they can be used with a long life and suitable for the system. Since our stainless production tanks can be produced with special design according to each system, they can be easily integrated into the systems.

In addition to the robust, long-lasting and hygienic products we have adopted in our production, this quality is the most affordable price policy that can be achieved.

Hygienic + Long Life MIT Stainless Steel Tanks = Smooth Operation

MIT stainless steel boilers and storage tanks are manufactured with hygiene materials that can be safely used in the food industry. Thanks to the custom design serpentine, bacteria are prevented from forming in the boiler. Thanks to the hygienic water inside the MIT stainless tanks, the stored hot water can be used both as domestic hot water and as drinking water.

Corrosion Resistance Is Very High;

All MIT tanks and accumulator tanks made of stainless steel are produced with appropriate materials considering all corrosion types. In addition, galvanic and cathodic protection was increased to a very high level with the magnesium anodes used.

Durability;

The service life of MIT stainless steel tanks and storage tanks is longer than enamel or galvanized immersion chambers due to the structure of the material used. Maintenance and repair is very easy.

Uninterrupted and Trouble-Free Operation;

MIT stainless steel tanks and accumulation tanks provide long life, maintenance and repair facilities, as well as efficient use of energy throughout the system, providing ideal solution for residential and commercial buildings, industrial plants, providing uninterrupted and trouble-free operation.

Dimensions and Material Features

Model		MIT-SS 100	MIT-SS 160	MIT-SS 200	MIT-SS 350	MIT-SS 500	MIT-SS 600	MIT-SS 800
D	mm	400	460	475	550	650	660	780
Dpul	mm	420	500	500	700	820	820	935
A	mm	350	350	350	350	400	400	450
B	mm	650	650	750	875	925	1025	1075
C	mm	900	950	1150	1400	1450	1650	1700
H	mm	1160	1210	1410	1660	1760	1960	2010
Hk	mm	750	800	1000	1250	1250	1450	1450
hb	mm	100	100	100	120	150	150	150
ha	mm	150	150	150	150	150	150	200
w	mm	100	100	100	100	100	100	100
a	mm	100	100	100	100	100	100	100
b	mm	150	150	150	200	200	200	200
DN 1		1/2"	1/2"	1/2"	3/4''	3/4"	3/4"	3/4"
DN 2		1"	1"	1"	1 1/4"	1 1/4"	1 1/4"	1 1/2"
DN 3		3/4"	3/4"	3/4"	1"	1"	1"	1"
DN 4		3/4"	3/4"	3/4"	1"	1"	1"	1"
Material		AISI 304	AISI 304	AISI 304	AISI 304	AISI 304	AISI 304	AISI 304
Serpentine		1"	1 1/4"	1 1/4"	1 1/4"	1 1/4"	1 1/4"	1 1/4"
Serpentine Surfaces	m^2	0,6	0,85	1,2	1,5	2	2,2	2,92
S1 Body	mm	2	2	2	3	3	3	3
S2 Camber	mm	2	2	3	3	3	3	3

Model		MIT-SS 1000	MIT-SS 1500	MIT-SS 2000	MIT-SS 2500	MIT-SS 3000	MIT-SS 4000	MIT-SS 5000
D	mm	850	1050	1050	1200	1300	1300	1500
Dpul	mm	1055	1290	1290	1500	1590	1590	1830
A	mm	500	580	570	570	600	670	680
B	mm	1100	1130	1445	1370	1425	1770	1780
C	mm	1700	1680	2320	2170	2200	2870	2880
H	mm	2060	2060	2700	2550	2610	3350	3360
Hk	mm	1500	1500	2000	1800	2000	2500	2500
hb	mm	200	220	220	220	250	320	320
ha	mm	200	260	250	250	250	250	260
w	mm	100	100	100	100	100	100	100
a	mm	100	150	150	150	150	150	150
b	mm	200	200	200	200	200	200	200
DN 1		3/4"	3/4"	3/4"	3/4"	3/4"	3/4"	3/4"
DN 2		2"	2 1/2"	2 1/2"	2 1/2"	3"	3"	3"
DN 3		1 1/4"	1 1/2"	1 1/2"	1 1/2"	2"	2"	2"
DN 4		1 1/4"	1 1/2"	1 1/2"	1 1/2"	2"	2"	2"
Material		AISI 304	AISI 304	AISI 304	AISI 304	AISI 304	AISI 304	AISI 304
Serpentine		1 1/4"	1 1/4"	1 1/4"	1 1/4"	1 1/4"	1 1/2"	1 1/2"
Serpentine Surfaces	m^2	2,95	4	5	6	7	8	9
S1 Body	mm	3	4	4	4	4	4	5
S2 Camber	mm	4	4	5	5	5	6	6

Dimensions

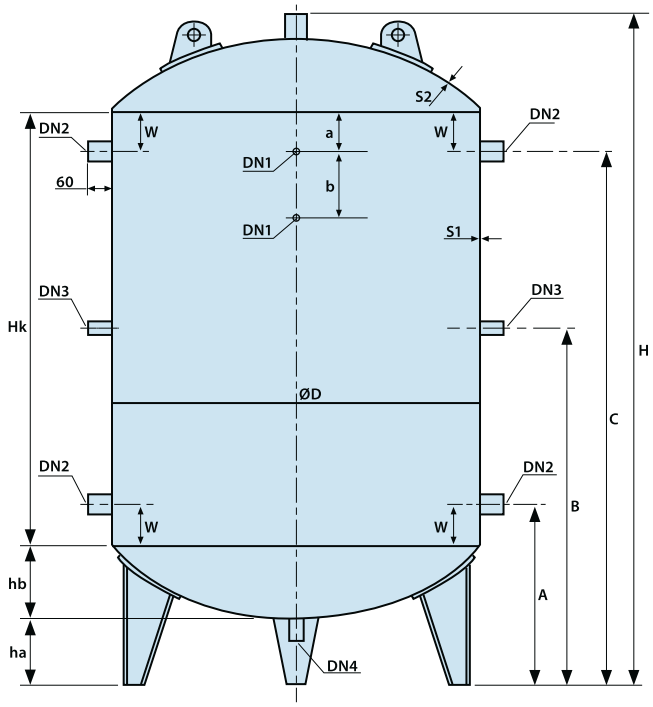

Accumulations Tank - Connection Diagram

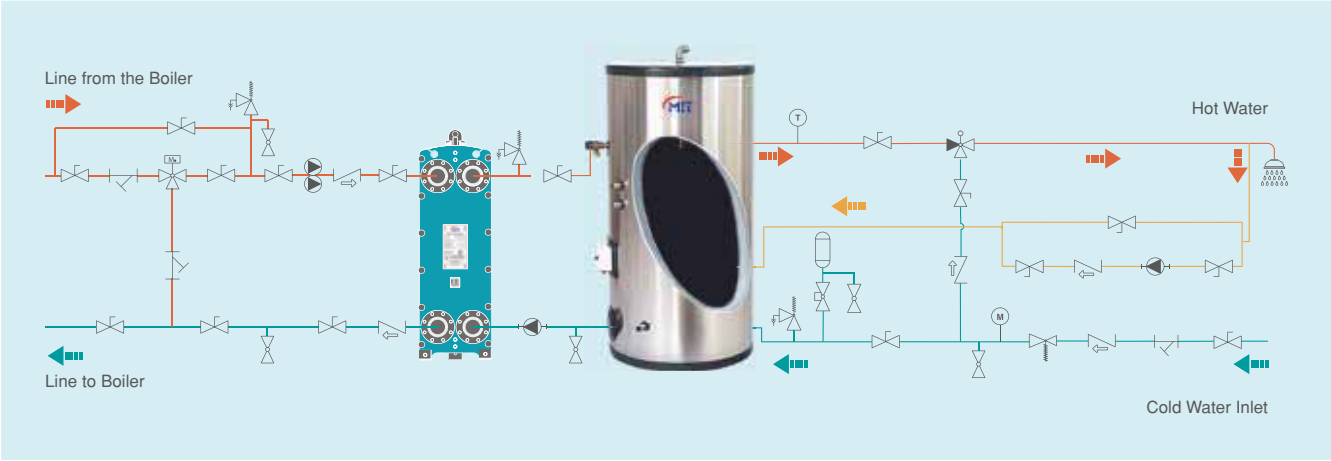

Solar Panel	Temperature Display	Pressure Display	Switch Flow	Pump	Twin Pump	Check Valve	Air Relief Cock
Bypass Valve	Pressure Breaker	Dirt Holder	Discharge Valve	3 Way Valve	Sediment Holder	Air Separat	Expansion Tanks with membrane
Balance Valve	Lock Valve	Radiator Valve	Spherical Valve	Pressure Safety Valve	3 Way Prorport. Motor Valve	2 Way Motor Valve	Thermostatic Valve

Water Heater Tank Types

Stainless Steel Tanks

Material: 304 L or 316 L

Insulation

- Polyurethane
- Special sponge
- Glass wool
- Rock wool

Advantages

- Very high corrosive strength
- Very long service life
- High compressive strength
- Low heat loss

MIT Boiler Capacities

- Stainless Steel.
- Cathodic protection is available.
- Soft PU (Sponge) insulation.
- Stitched pipe with serpentine.
- Cleaning hole is available.
- Thermometer is on the boiler.
- Electric heater can be added in desired sizes.

SINGLE SERPENTINE

Capacity (lt)	Heater Fluid Temperature	Heating Capacity (lt/h) 10 °C - 60 °C	Heating Capacity (lt/h) 10 °C - 45 °C
100	90-70 °C	280	529
	80-60 °C	178	357
160	90-70 °C	400	714
	80-60 °C	238	477
200	90-70 °C	620	1114
	80-60 °C	380	763
300	90-70 °C	620	1114
	80-60 °C	380	763
500	90-70 °C	1080	1857
	80-60 °C	680	1315
800	90-70 °C	1560	2729
	80-60 °C	1020	1915
1000	90-70 °C	1560	2729
	80-60 °C	1020	1915
1500	90-70 °C	2000	3486
	80-60 °C	1300	2458
2000	90-70 °C	2580	4429
	80-60 °C	1680	3143
2500	90-70 °C	3361	5801
	80-60 °C	2200	4115
3000	90-70 °C	3881	6687
	80-60 °C	2560	4744
4000	90-70 °C	4120	6870
	80-60 °C	3020	5220
5000	90-70 °C	5430	8750
	80-60 °C	4230	6600

DOUBLE SERPENTINE

Capacity (lt)	Heater Fluid Temperature	Heating Capacity (Top+Bottom) (lt/h) 10 °C - 60 °C	Heating Capacity (Top+Bottom) (lt/h) 10 °C - 45 °C
160	90-70 °C	432	797
	80-60 °C	238	508
200	90-70 °C	568	1032
	80-60 °C	328	683
300	90-70 °C	568	1032
	80-60 °C	328	683
500	90-70 °C	1708	2971
	80-60 °C	1068	2078
800	90-70 °C	2260	3978
	80-60 °C	1460	2772
1000	90-70 °C	2260	3978
	80-60 °C	1460	2772
1500	90-70 °C	2700	4735
	80-60 °C	1740	3315
2000	90-70 °C	3750	6475
	80-60 °C	2430	4572
2500	90-70 °C	4801	8287
	80-60 °C	3120	5864
3000	90-70 °C	5696	9773
	80-60 °C	3710	6916
4000	90-70 °C	2100	4250
	80-60 °C	1230	3210
5000	90-70 °C	3050	4800
	80-60 °C	1730	4010

80 °C 90-70 Boiler 70 °C 80-60 Boiler

Stainless Tanks

What are the Stainless Steel Grade Types?

Although there are many grades of stainless steel, AISI 304 and AISI 316 grades are used in the production of tanks. AISI 304 grade contains 18% chromium and 8% nickel. 316 grade contains 16% chromium, 10% nickel and around 2% molybdenum. Among these two stainless grades, AISI 304 grade is widely used. Ease of production and ease of use in many environments are among the reasons why this grade stainless steel is the most common stainless steel in the world.

What are the Possible Applications of Stainless Tanks ?

Stainless tanks are used in houses, apartments, hotels, food, industry and agricultural areas where there is a need to store domestic water and drinking water. For this reason, hygiene and storage in the field of food and agriculture are very important. The healthy storage of the products used in these sectors is provided by stainless tanks. Especially process tanks are of great importance in the production phase. Stainless tanks are also of great importance in the industry for the storage of chemicals. Of course, process tanks are of particular importance in the industry, not only in terms of storage but also in terms of production.

MIT stainless tanks are extremely long-lasting compared to standard pressure tanks in cases where it is not appropriate to use standard sheet metal products with chemical products. For this reason, they are recommended to be used in houses, apartments, public institutions, drinking water facilities and wherever such areas of need exist.

What is ADR?

ADR is the agreement concerning the International Carriage of Dangerous Goods by road. All liquid, solid or gaseous substances that are harmful to the environment and living things are dangerous substances according to ADR legislation. The aim of ADR is to increase safety in international transport by road. It is necessary to ensure that dangerous substances are transported by land vehicles without harming human health, other living things and the environment. The risks of the cargo to be transported are taken into account and the conditions mentioned in ADR are applied in order to minimize the risks.

It has a container design in accordance with ADR. It is produced with traceable and certified raw materials and equipment after the prototype approval stage. Fuel transportation is also an area that requires extreme attention and precautions.

MIT Steel IBCs

These IBCs, which are frequently encountered in the market, can be found on a wide scale in terms of price and durability. The most impressive feature of IBCs is their durable design features despite their affordable price. Specially designed for safe transportation over long distances, these containers have a high-resistance case against shocks and various other obstacles.
The unique designs of stainless steel IBC (Intermediate Bulk Container) tanks make them different from other storage tanks.

MIT Brand in IBC Cosmetic Processes

Our IBCs are usually preferred in processes written below,

- In Petroleum and Petrochemical Processes
- In Acid Processes
- In Food Processes
- In Pharmaceutical Processes
- In Cosmetic Processes
- In Mining Processes
- In Plastic Processes
- In Sauce Processes

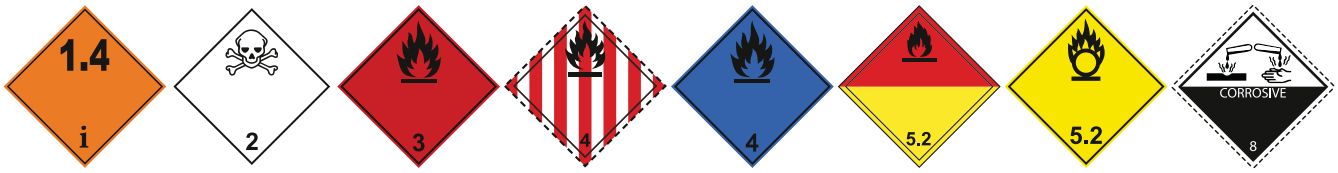

MIT Brand ADR Approved Steel IBCs

The transportation of dangerous goods on highways, the production, filling and unloading of these substances in accordance with the ADR legislation became mandatory in our country in 2018. Our company completed its work in 2017 to produce containers suitable for transportation in accordance with the standard. After the production of 5 liter, 10 liter and 30 liter 1A1 type national marker packages and 110 liter, 250 liter and 500 liter 31A type metal IBCs, the mandatory tests were successfully passed and certified by TSE.

Ekin Endüstriyel is the first company in Turkey to have a design certificate and production site suitability for all standard volumes used in national marker transportation. Our standardized products, are shipped with the relevant certificates and documentation after the production processes are completed, pre-tested by experienced and trained test personnel and retested by TSE experts, and they are constantly followed up for periodic mandatory maintenance.

Vibration Test

Pressure Test

Top Lift Test

National Marker Packaging Type 1A1

- 5 Liter
- 10 Liter
- 30 Liter 1A1

31A Type IBC

- 110 Liter
- 250 Liter
- 500 Liter

Bottom Lift Test

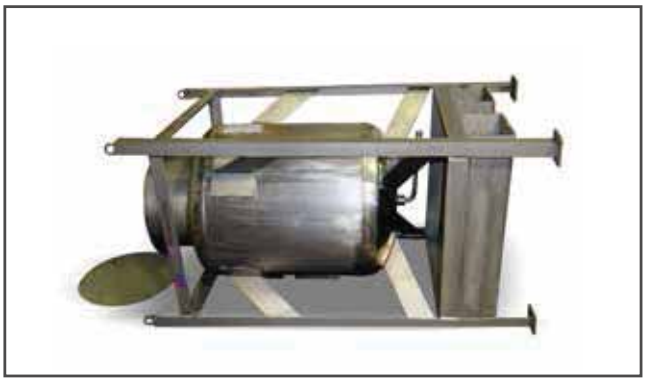

Drop Test

Our Maintenance Services

What Might Your Old Tanks Need?

- Replace your filler caps with 6” SCH10S (168.3x3.40), 316L quality material, cap and union.
- Weld 316L quality ½” nipple on the upper camber of the tank and installing a stainless ball valve.
- Make discoveries and relevant action to eliminate all deficiencies within the scope of ADR requirements.

What We Provide for Your New IBCs

- Project design, production and certification of tanks with a capacity of 5 lt, 10 lt, 30 lt, 110 lt, 250 lt, 500 lt.
- Taking your tanks from your field, performing mandatory periodic maintenance, and delivering them back to your field and extending their lifetime.

EKİN ENDÜSTRİYEL

BALANCE **TANKS**
DIRT **SEPARATORS**
AIR **SEPARATORS**
AIR **TUBES**

PRESSURE VESSELS

Balance Tank

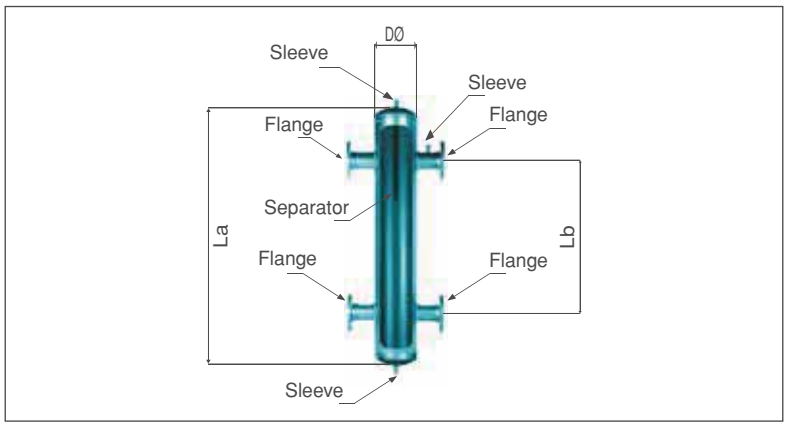

TECHNICAL INFORMATION						
Code	Connection Diameter	Body Diameter	Height	Interconnection Height	Flow	Capacity
MIT-DK	DN	ØD	La	Lb	m³/h	kW
MIT-DK-25	25	65	450	280	1	20
MIT-DK-32	32	65	450	270	1,7	29
MIT-DK-40	40	80	480	320	2,5	43
MIT-DK-50	50	100	600	350	4	70
MIT-DK-65	65	150	720	400	8	140
MIT-DK-80	80	200	940	500	12	210
MIT-DK-100	100	200	940	500	20	350
MIT-DK-125	125	250	1160	600	32	550
MIT-DK-150	150	300	1380	700	52	900
MIT-DK-200	200	400	1840	1000	100	1750
MIT-DK-250	250	500	2130	1250	185	3250
MIT-DK-300	300	600	2420	1660	300	5250

In the boiler circuit (primary circuit) and in the heating circuits (secondary circuit) the hydraulic balance vessel separates the boiler circuit and the heating circuits from each other if there are different heating water flows.

Features

- 1"-12" wiring connection (DN25-DN300).
- 10 and 16 atm recommended operation.
- The test pressure is 1.5 times the operating pressure.
- Maximum operating temperature of 120 °C.
- PN16 pressure class.
- Electrostatic powder coating.

Advantages

- There is no hydraulic effect between the boiler circuit and the heating circuit.
- Boilers and heating zones operate under suitable water flow.
- It can be used in single or multiboiler systems regardless of heating circuit control systems.
- The adjustment elements on both sides of the equilibrium container work optimally. (Three-way valve, etc.) Boiler circuit and adjustment elements are dimensioned without any problem.

Connection Types

- Flanged Connection
- Tube Welded Connection
- Threaded Connection

Certificates

- TSEK Certificate
- CE Certificate
- ISO 9001 Certificate

Combined Balance Tank

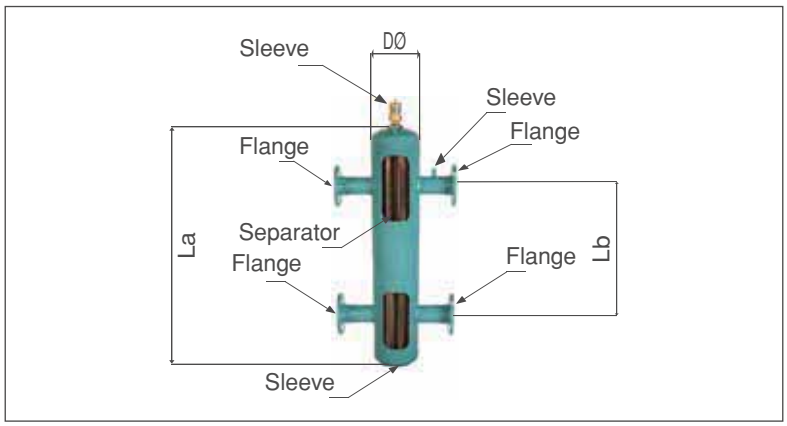

TECHNICAL INFORMATION						
Code	Connection Diameter	Body Diameter	Height	Interconnection Height	Flow	Capacity
MIT-PDK	DN	ØD	La	Lb	m³/h	kW
MIT-PDK-25	25	65	450	280	1	20
MIT-PDK-32	32	65	450	270	1,7	29
MIT-PDK-40	40	80	480	320	2,5	43
MIT-PDK-50	50	100	600	350	4	70
MIT-PDK-65	65	150	720	400	8	140
MIT-PDK-80	80	200	940	500	12	210
MIT-PDK-100	100	200	940	500	20	350
MIT-PDK-125	125	250	1160	600	32	550
MIT-PDK-150	150	300	1380	700	52	900
MIT-PDK-200	200	400	1840	1000	100	1750
MIT-PDK-250	250	500	2130	1250	185	3250
MIT-PDK-300	300	600	2420	1660	300	5250

The combined balance tank performs the function of the air separator, the sediment retainer-strainer and the equilibrium tank. Thanks to this feature, it provides significant cost savings.

Features

- 1"-12" wiring connection (DN25-DN300).
- 10 and 16 atm recommended operation.
- The test pressure is 1.5 times the operating pressure.
- Maximum use temperature of 120 °C.
- PN16 pressure class.
- Electrostatic powder coating.

Advantages

- In closed circuit heating systems, the heater extends the life of the boiler systems by making thermal and hydraulic balancing between the welding and the installation.
- Provides pressure, temperature and flow balance of different heat boilers.
- The air separation process can be done very quickly thanks to the automatic air purge air purifier. Thanks to the drain cock at the bottom of the equilibrium vessel, the deposits and debris accumulated in the container can be easily emptied.

Connection Types

- Flanged Connection
- Tube Welded Connection
- Threaded Connection

Certificates

- TSEK Certificate
- CE Certificate
- ISO 9001 Certificate

Dirt Separators

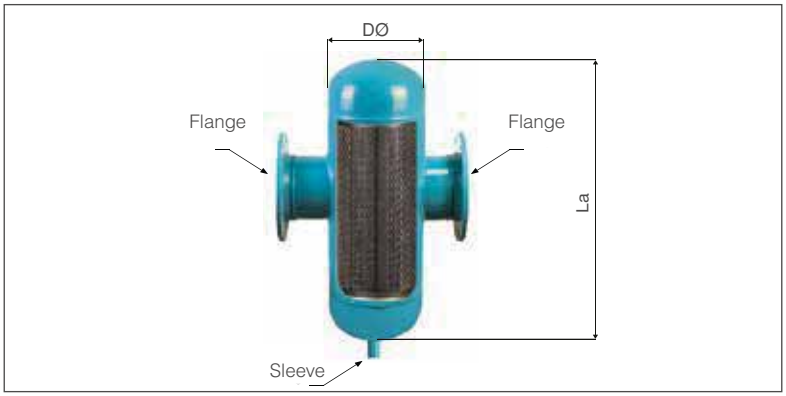

TECHNICAL INFORMATION			
Code	Connection Diameter	Body Diameter	Height
MIT-TT	DN	ØD	La
MIT-TT-25	25	100	300
MIT-TT-32	32	125	310
MIT-TT-40	40	125	310
MIT-TT-50	50	150	320
MIT-TT-65	65	150	420
MIT-TT-80	80	200	490
MIT-TT-100	100	200	490
MIT-TT-125	125	250	630
MIT-TT-150	150	300	680
MIT-TT-200	200	400	700
MIT-TT-250	250	500	1030
MIT-TT-300	300	600	1320

It prevents the unknown matter in the water (mud and dirt etc.) from entering the water from entering into the drainage.

Features

- 1"-12" wiring connection (DN25-DN300).
- Maximum operation of 10 and 16 atm.
- The test pressure is 1.5 times the operating pressure.
- Maximum operating temperature of 120 °C
- PN16 pressure class.
- Electrostatic powder coating.

Advantages

- The impurities are filtered from the filter and accumulate in the lower part of the device.
- Thus, the system will never be clogged.
- The accumulated sediment is easily discharged through the drain valve under the device.

Connection Types

- Flanged Connection
- Tube Welded Connection
- Threaded Connection

Certificates

- TSEK Certificate
- CE Certificate
- ISO 9001 Certificate

Combined Dirt and Air Separators

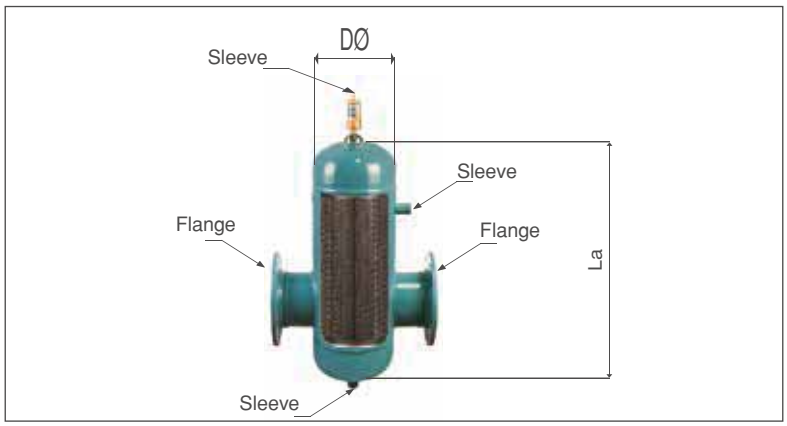

TECHNICAL INFORMATION			
Code	Connection Diameter	Body Diameter	Height
MIT-PTHA	DN	ØD	La
MIT-PTHA-25	25	100	300
MIT-PTHA-32	32	125	310
MIT-PTHA-40	40	125	310
MIT-PTHA-50	50	150	320
MIT-PTHA-65	65	150	420
MIT-PTHA-80	80	200	490
MIT-PTHA-100	100	200	490
MIT-PTHA-125	125	250	610
MIT-PTHA-150	150	300	675
MIT-PTHA-200	200	400	750
MIT-PTHA-250	250	500	1030
MIT-PTHA-300	300	600	1320

It prevents the unknown matter in the water (sludge, sediment and dirt caused by the water) to enter into the drainage and into the drain.

Features

- 1"-12" wiring connection (DN25-DN300).
- 10 and 16 atm recommended operation.
- The test pressure is 1.5 times the operating pressure.
- Maximum use temperature of 120 °C.
- PN16 pressure class.
- Electrostatic powder coating.

Advantages

- The impurities are filtered from the filter and accumulate in the lower part of the device.
- Thus, the system will never be clogged.
- The accumulated sediment is easily discharged through the drain valve under the device.
- The air separation process can be done very quickly thanks to the automatic air purge air purifier. Thanks to the drain cock at the bottom of the equilibrium container, the sediment and debris holder accumulated in the container can be easily emptied.

Connection Types

- Flanged Connection
- Tube Welded Connection
- Threaded Connection

Air Separators

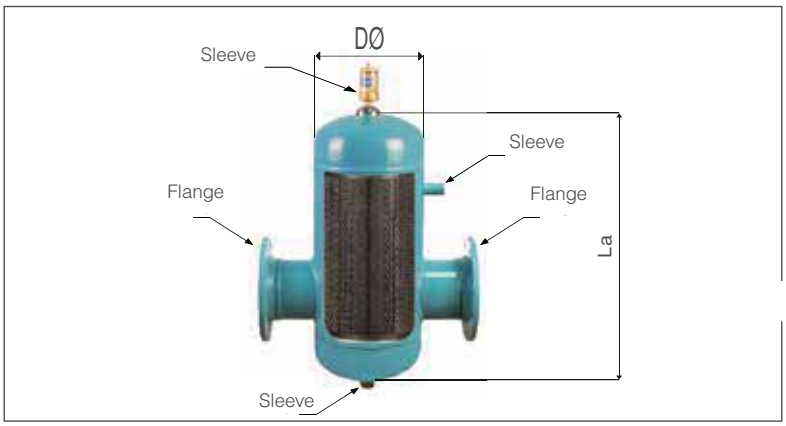

TECHNICAL INFORMATION			
Code	Connection Diameter	Body Diameter	Height
MIT-HA	DN	ØD	La
MIT-HA-25	25	100	300
MIT-HA-32	32	125	310
MIT-HA-40	40	125	310
MIT-HA-50	50	150	320
MIT-HA-65	65	150	420
MIT-HA-80	80	200	490
MIT-HA-100	100	200	490
MIT-HA-125	125	250	630
MIT-HA-150	150	300	680
MIT-HA-200	200	400	700
MIT-HA-250	250	500	1030
MIT-HA-300	300	600	1320

The air and water, which are dissolved in the water, start to circulate with the water in the system by increasing the temperature. This air can cause corrosion in materials such as pipes, fittings, boilers and combi boilers. Sound causes circulatory disorders and cavitation in pumps. Due to the air of the radiators, it can cause non-heating problems. Therefore, these problems are prevented by using air seperators in the system.

Features

- 1"-12" wiring connection (DN25-DN300).
- 10 and 16 atm recommended operation.
- The test pressure is 1.5 times the operating pressure.
- Maximum use temperature of 120 °C.
- PN16 pressure class.
- Electrostatic powder coating.

Advantages

- Discharges the air in the system.
- The air is continuously evacuated when the system is running without the need to stop the pump during venting.
- The top drain valve is provided for draining air during filling.

Connection Types

- Flanged Connection
- Tube Welded Connection
- Threaded Connection

Certificates

- TSEK Certificate
- CE Certificate
- ISO 9001 Certificate

Air Tanks

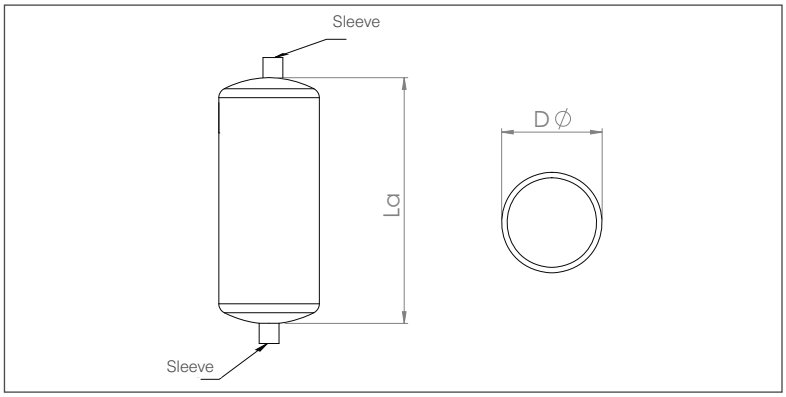

TECHNICAL INFORMATION			
Code	Capacity	Body Diameter	Height
MIT-HT	lt	ØD	La
MIT-HT-5	5	150	225
MIT-HT-10	10	200	260
MIT-HT-15	15	200	390
MIT-HT-20	20	300	240
MIT-HT-30	30	300	360
MIT-HT-40	40	300	480

The air tank ensures that the air formed in the pipes and radiators in the central heating systems is easily collected and discharged from the top branch. Allows air in the system to be evacuated. Continuously evacuates air while the system is running. A relief valve or an air breather can be installed.

Features

- 10-16 atm maximum operation.
- The test pressure is 1.5 times the operating pressure.
- Maximum use temperature of 120 °C.
- Electrostatic powder coating.

Certificates

- TSEK Certificate
- CE Certificate
- ISO 9001 Certificate

Where is the Air Tube Used?

Air tubes are used in certain places in accordance with the working principle. Radiators, boiler installations and floor heating (heating) installations can be given as examples.

EKİN ENDÜSTRİYEL

STEAM SEPARATORS

PRESSURE VESSELS

Steam Separators

Steam separators are fixtures that provide clean and dry steam to the system by separating the water droplets and particles carried in the steam with the vortex effect. Our two types of high efficiency separators designed as horizontal and vertical; they are manufactured from carbon steel or stainless material as flanged, threaded or weld-neck.

MIT Steam Separators,

- MIT steam separators prevent damage to the system by preventing water hammer formation.
- Thanks to its high efficiency, it provides protection to steam installations and minimizes maintenance, repair and downtime costs
- It ensures efficient operation of measurement and control devices and extends their lifetime.
- Thanks to its robust structure, it does not require maintenance and repair..
- Steam separators can be produced in PN16, PN25, PN40 pressure class.

Horizontal Type Steam Separators

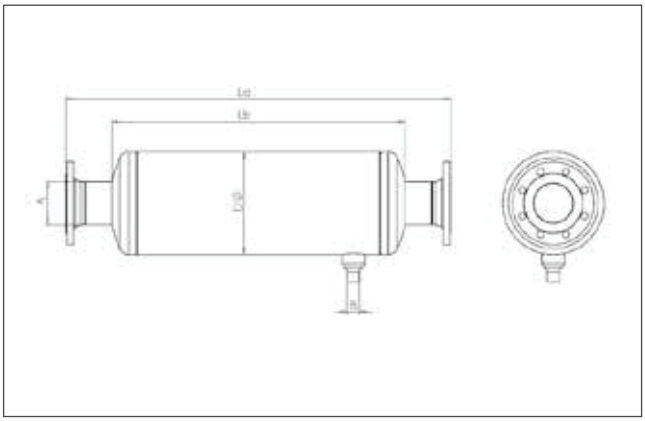

Horizontal Type					
Model	DØ	La	Lb	A	B
MIT.B.S.Y.DN25	DN100	550	380	DN25	1/2“
MIT.B.S.Y.DN32	DN125	550	390	DN32	1/2“
MIT.B.S.Y.DN40	DN125	620	450	DN40	1/2“
MIT.B.S.Y.DN50	DN150	680	500	DN50	1/2“
MIT.B.S.Y.DN65	DN150	800	600	DN65	1/2“
MIT.B.S.Y.DN80	DN200	950	720	DN80	1/2“
MIT.B.S.Y.DN100	DN200	1035	800	DN100	1“
MIT.B.S.Y.DN125	DN300	1210	1000	DN125	1“
MIT.B.S.Y.DN150	DN300	1450	1150	DN150	1“
MIT.B.S.Y.DN200	DN400	1500	1170	DN200	1“
MIT.B.S.Y.DN250	DN500	1800	1470	DN250	2“
MIT.B.S.Y.DN300	DN600	2200	1800	DN300	2“

Vertical Type Steam Separators

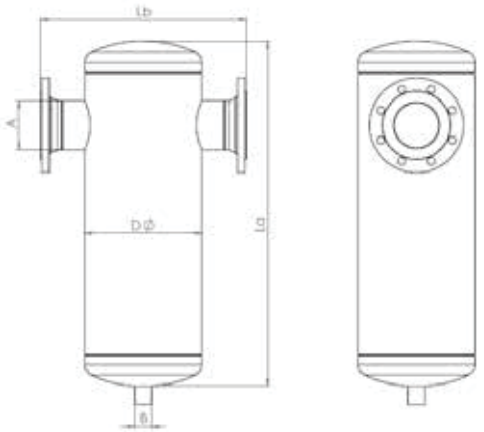

Vertical Type					
Model	DØ	La	Lb	A	B
MIT.B.S.D.DN25	DN100	370	240	DN25	1/2“
MIT.B.S.D.DN32	DN125	390	280	DN32	1/2“
MIT.B.S.D.DN40	DN125	450	290	DN40	1/2“
MIT.B.S.D.DN50	DN150	500	340	DN50	1/2“
MIT.B.S.D.DN65	DN150	600	310	DN65	1/2“
MIT.B.S.D.DN80	DN200	720	400	DN80	3/4“
MIT.B.S.D.DN100	DN200	800	480	DN100	1“
MIT.B.S.D.DN125	DN300	1000	570	DN125	1“
MIT.B.S.D.DN150	DN300	1170	540	DN150	1“
MIT.B.S.D.DN200	DN400	1200	665	DN200	1“
MIT.B.S.D.DN250	DN500	1500	800	DN250	2“
MIT.B.S.D.DN300	DN600	1800	970	DN300	2“

What are the possible applications of Steam Separators?

Steam separators can be used wherever dry and clean steam is needed. Examples of those used in factories, food facilities, steam turbine inlet, heating coils and steam boiler outlet lines can be given as control valves and meters (before control application).

EKİN ENDÜSTRİYEL

PRESSURED AIR **TANKS**

PRESSURE VESSELS

Vertical Type Air Tanks

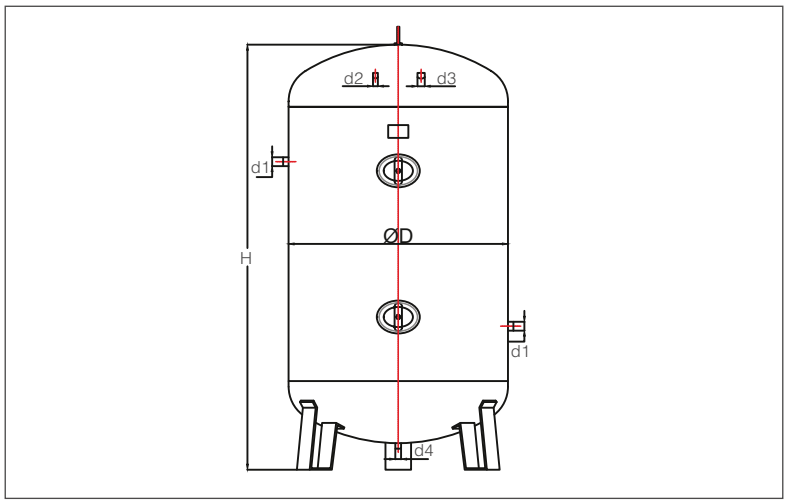

Vertical Type Air Tanks (2009/105/AT) - (97/23/EC)											
Product Code	Volume (LT)	Design Pressure (Bar)			Dimensions						
					D (mm)	H (mm)	Sight Screen (mm)	d1	d2	d3	d4
KD 10	10	11	16	40	219	500	-	3/4"	1/2"	1/2"	1/2"
KD 50	50	11	16	40	300	900	-	3/4"	1/2"	1/2"	1/2"
KD 100	100	11	16	40	384	1100	-	3/4"	1/2"	1/2"	1/2"
KD 200	200	11	16	40	450	1600	-	3/4"	1/2"	1/2"	1/2"
KD 300	300	11	16	40	480	1900	-	2"	1/2"	1/2"	1/2"
KD 500	500	11	16	40	600	2150	-	2"	1/2"	1/2"	1/2"
KD 1000	1000	11	16	40	850	2250	110x160	1 1/4 "	1/2"	3/4"	1/2"
KD 1500	1500	11	16	40	1100	2150	(2x)110x160	2"	1/2"	3/4"	1/2"
KD 1800	1800	11	16	40	1100	2450	(2x)110x160	2"	1/2"	3/4"	1/2"
KD 2000	2000	11	16	40	1150	2550	(2x)110x160	2"	1/2"	3/4"	3/4"
KD 3000	3000	11	16	40	1200	3200	320x420	2 1/2 "	1/2"	3/4"	3/4"
KD 4000	4000	11	16	40	1400	3400	320x420	Dn80	1/2"	1"	1"
KD 5000	5000	11	16	40	1400	4200	320x420	Dn80	1/2"	1"	1"
KD 6000	6000	11	16	40	1600	4700	320x420	Dn80	1/2"	1"	1"
KD 8000	8000	11	16	40	1600	4800	320x420	Dn100	1/2"	1"	1"
KD 10000	10000	11	16	40	1600	5500	320x110	Dn100	1/2"	1"	1"
KD 15000	15000	11	16	40	1900	6100	320x420	Dn100	1/2"	1"	1"

All our tanks are CE certified. The material is EN10028-2 P265 GH, P355 GH Sheet.
Production can be made at the desired volume and pressure. Our tanks are electrostatic powder painted.

The air tank is one of the main products that balances the pressure fluctuations at the compressor outlet. Provides air pressure at constant pressure. Stores the amount of air required to meet sudden air demands exceeding the compressor capacity.

The capacity of the air tank is determined depending on the compressor capacity and the shape of the air demand. Air tanks should be installed where the ambient temperature is low. The place where the tank is located in a moist and corrosionable place should be produced by increasing the strength by removing the double layer primer.

Air tanks are manufactured in such a way that they can be fitted with the necessary accessories.

For example;
- Safety valve
- Drain valve
- Manometer

Our air tanks are produced in 10-16-20 and 40 bars. Custom designs can be produced.

Horizontal Type Air Tanks

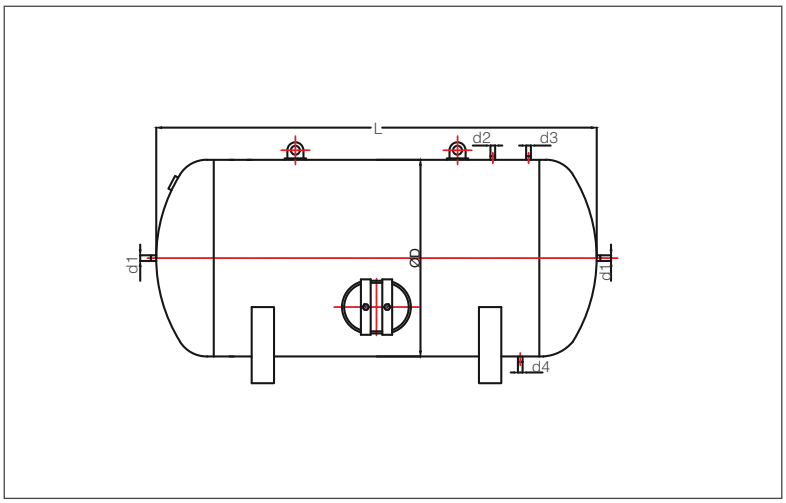

Horizontal Type Air Tanks (2009/105/AT) - (97/23/EC)											
Product Code	Volume (LT)	Design Pressure (BAR)			Dimensions						
					D (mm)	H (mm)	Sight Screen (mm)	d1	d2	d3	d4
KY 10	10	11	16	40	219	350	-	1/2"	1/2"	1/2"	1/2"
KY 50	50	11	16	40	300	750	-	1/2"	1/2"	1/2"	1/2"
KY 100	100	11	16	40	384	950	-	3/4"	1/2"	1/2"	1/2"
KY 200	200	11	16	40	450	1250	-	3/4"	1/2"	1/2"	1/2"
KY 300	300	11	16	40	480	1550	-	2"	1/2"	1/2"	1/2"
KY 500	500	11	16	40	600	1950	-	2"	1/2"	1/2"	1/2"
KY 1000	1000	11	16	40	850	1900	-	2"	1/2"	3/4"	3/4"
KY 1500	1500	11	16	40	1100	1500	(2X)110X160	2"	1/2"	3/4"	3/4"
KY 1800	1800	11	16	40	1100	2000	(2X)110X160	2"	1/2"	3/4"	3/4"
KY 2000	2000	11	16	40	1150	2180	(2X)110X160	2"	1/2"	3/4"	3/4"
KY 3000	3000	11	16	40	1200	2500	320X420	2 1/2 "	1/2"	3/4"	3/4"
KY 4000	4000	11	16	40	1400	2950	320X420	DN80	1/2"	1"	1"
KY 5000	5000	11	16	40	1400	3100	320X420	DN80	1/2"	1"	1"
KY 6000	6000	11	16	40	1600	3300	320X420	DN80	1/2"	1"	1"
KY 8000	8000	11	16	40	1600	4300	320X420	DN100	1/2"	1"	1"
KY 10000	10000	11	16	40	1600	5400	320X110	DN100	1/2"	1"	1"
KY 15000	15000	11	16	40	1900	5300	320X420	DN100	1/2"	1"	1"

All our tanks are CE certified. The material is EN10028-2 P265 GH, P355 GH Sheet.
Production can be made at the desired volume and pressure. Our tanks are electrostatic powder painted.

What are the possible applications of Air tanks?

Air tanks can be used everywhere from small businesses to large businesses.
In small enterprises, when the manpower is insufficient or minimal manpower is desired, compressed air can be utilized, thus saving both time and effort. For example: small auxiliary part or tire manufactories.
If we look at the areas where it is beneficial to use with a compressor in large enterprises, considering that production equipment such as mold processing benches and press benches are found in almost every production facility, its usage area is very wide. For example: car factories, shipyards and large industrial establishments.

If we say that, air tank supported compressors are used in every visible and invisible area of a production pipeline, we would not be wrong.

Our air tanks are specially produced at 10, 16, 20, and 40 bars.

EKİN ENDÜSTRİYEL

NEUTRALIZATION **UNITS**

PRESSURE VESSELS

Neutralization Unit Pro

TECHNICAL INFORMATION						
Code	Capacity	Flow	Width	Depth	Height	Inlet-Outlet
MIT-NUP	kW	l/h	mm	mm	mm	inch
MIT-NUP-350	350	40	400	300	235	3/4"
MIT-NUP-500	500	60	400	300	235	3/4"
MIT-NUP-750	750	90	600	400	235	3/4"
MIT-NUP-1000	1000	120	600	400	235	3/4"
MIT-NUP-1500	1500	180	600	400	335	3/4"
MIT-NUP-2000	2000	240	600	600	335	1"
MIT-NUP-3000	3000	360	800	600	400	1"
MIT-NUP-4000	4000	480	800	600	400	1"

Due to condensation occurring during combustion and condensation of flue gases, pH values are reduced and condensate acid is formed. The condensate acid causes severe ecological problems and causes corrosive effects on the economizer and the boiler. The neutralization device prevents this problem by neutralizing the pH value.

Features

- Complies with legislation.
- Material is PP or HDPE.
- Easy to install and use.
- Easy maintenance and cleaning.
- Can be manufactured in different dimensions and capacities.

Certificates

- TSEK Certificate
- CE Certificate
- ISO 9001 Certificate

Neutralization Unit Eco

TECHNICAL INFORMATION						
Code	Capacity	Flow	Width	Depth	Height	Inlet-Outlet
MIT-NUE	kW	l/h	mm	mm	mm	inch
MIT-NUE-350	350	50	400	300	300	1"
MIT-NUE-500	500	60	400	300	300	1"
MIT-NUE-750	750	100	565	410	370	1 1/2"
MIT-NUE-1000	1000	120	565	410	370	1 1/2"
MIT-NUE-1500	1500	180	600	490	340	1 1/2"
MIT-NUE-2000	2000	200	600	490	340	1 1/2"
MIT-NUE-2500	2500	250	800	600	500*	1 1/2"
MIT-NUE-3000	3000	300	800	600	500*	1 1/2"

Features

- Complies with legislation.
- Material is PP or HDPE.
- Easy to install and use.
- Easy maintenance and cleaning.
- Affordable and effective system.
- Various sizes and capacities can be manufactured.
- Cover bolts are stainless steel.
- Tank content; Lime Stone (Calcium Carbonate) and Neutralization Granules.

Caution

- The limestone in the tank should contain more than 90% calcium carbonate.
- Calcium carbonate is low (inactive particles in chemical reaction form sludge in the tank), thus preventing chemical reaction and fluid flow.
- When the amount of limestone in the tank falls below a certain level, new ones are placed.
- The pH value should be measured at periodic intervals.
- If the pH value is low, the stone level should be
- checked.

EKİN ENDÜSTRİYEL

HEAT STATIONS

INDUSTRIAL AND FOOD GRADE SYSTEMS

Heat Stations

Energy efficiency is a phrase we hear very often. Energy efficiency is the reduction of energy consumption by providing the same production and service quality without reducing the amount of energy. The ever-increasing energy costs in the world show that the issue of energy efficiency is very important. With heat stations, there is both energy recovery and more efficient use. With heat transfer, the water at the desired temperature can be circulated in the system or sent to the system.

MIT package systems are used in residences, factories, geothermal facilities, pool systems, industries and marine areas in the production of hot water from steam or electricity, steam systems, chiller lines, radiator heating and similar applications. It provides you with package systems with the features requested by these applications.

The heat station is a multifunctional unit that prepares the domestic hot water with the principle of instant heating and provides the control of the heating system. The heat station acts as an interface in the central heating system and becomes the energy center of that region. The heat station does not produce energy, it transfers the energy from the central heat source to the area by in a suitable form.

Since there is no domestic hot water storage in the heating stations, the risk of legionella bacteria formation is eliminated as it is prepared when needed. Heat stations are interfaces to the central heating system. They do not produce energy, they control the hot water coming from the heating center according to the needs of the flat and direct it to the heat exchanger or heating line.

Heat Station Usage Areas

Multi-story Buildings
Centrally Heated Villas
Different Heating Sources
Geothermal
Cogeneration
Regional Heating
Natural Gas, Fuel Oil, Wood
Coal Boilers

Heat Station Installation Areas

Domestic Hot Water
Recirculation Line
Heating System
Radiator
Heated Floors
FCU
Convectors
Cooling Systems
Pressure and Flow Regulators
Heat and Water Meters

Ekin Endüstriyel MIT branded package systems are designed in line with the demands and expectations of our customers. Equipment prepared in line with requests and specifications are presented to our customers after being drawn by technical artists. MIT package systems are designed in line with your request as closest to your needs and presented to you in 3D. So that you can present the preliminary information to your customer or manager and get an informed approval. At the same time, you will be away from surprise results as you will have information about how much space the system will occupy in your facility and connection points required. It is possible to act very quickly for tasks such as installation and commissioning.

With our package systems and suitable communication and control equipment, we can offer the flexibility you want while offering a solution. Its use, maintenance and failure are easy to intervene and solved. There is minimum time loss and discontinuity during operation. The systems also have uses such as heating, cooling, heat conversion, heat recovery. By keeping the system constant at the desired values, it ensures that the process or the environment remains stable.

Ekin Endüstriyel, which constantly renews and develops itself, always offers the most efficient solutions to its customers with its MIT package systems.

- MIT package systems provide water at a constant temperature, even in sudden and extremely variable hot or cold water requirements.
- Precision temperature control can be made regardless of the hot water load. It adapts perfectly to load changes in accordance with the heating process.
- High load requirements can be met.
- No need to spend time on system design.
- Requires a small installation volume.
- A solution is reached with a single system.
- Adapts to any type of business.
- Provides high efficiency, low maintenance and installation costs.
- The commissioning of package systems prepared by professional teams should be carried out by expert technical personnel. MIT package systems are always put into service with 100% customer satisfaction and attractive prices.

EKİN ENDÜSTRİYEL

INDUSTRIAL
PROCESS SYSTEMS

INDUSTRIAL AND FOOD
GRADE SYSTEMS

Industrial Process Systems

We offer engineering solutions supported by our special software in all kinds of plate, tube and shell heat exchangers needed in industrial facilities (automotive, dairy, ceramics, chemistry, etc.). We can produce special solutions according to internal and external fluids such as water, oil, steam used in your process applications. Our products are produced with copper, stainless steel, titanium and aluminum pipe materials which are chosen used depending on the project.

Our systems are prepared in accordance with Industry 4.0. With the desired PROFINET, PROFIBUS, MODBUS, SQL Server and MQTT Server, you can add and control your building management systems. By specifying your requests to our technical teams, a suitable communication system has been prepared and the data you want will be easily transferred to you. The systems can be easily monitored either via a touch screen or from a PC screen.

Depending on the project data, our system designs, software and equipment differ. We offer the most suitable equipment and solutions for your process. We utilize and develop various support and applications together in our solutions and commissioning processes. We implement and follow up with the most suitable and close solutions to your process and request.

In many industrial processes, temperatures need to be precisely controlled to ensure desired quality levels. A variety of thermal transfer fluids are used to cool and heat, including air, water, oil, or mixtures of these materials. Process temperatures can be reliably regulated based on flow values and with the help of an intelligent solution.

With the remote access module installed on the system, you can both monitor your device data from any point and in case of a malfunction, our technical team can quickly intervene in your device. You can increase your efficiency by gaining speed in your production phase and shortening the maintenance and breakdown processes.

While troubleshooting failures
we can help to narrow the failure to a point with our experience in detecting and understanding causes and save you time.

Appropriate equipment selection is very important in industrial processes. With our engineers, who have devoted their years to this work, your systems and automation will work in full harmony with products such as sensors, pumps, valves, etc.

EKİN ENDÜSTRİYEL

Industrial Process Technical Drawing

Our systems are designed and drawn in 3D. It is submitted for the approval of you, our valued customers, for a detailed examination. With the help of the drawings you have received, positioning, connection points, easy intervention can be taken into account, and appropriate adjustments can be made.

EKİN ENDÜSTRİYEL

DOSING SYSTEMS

INDUSTRIAL AND FOOD GRADE SYSTEMS

Dosing Systems

Dosing, in general terms, is the process of adding additives to the main raw material. This setting can be measured with very sensitive devices and is important in terms of mixing quality.

Dosing systems are used in all areas of production. Dosing systems are used in the following sectors;

- Chemical Manufacturing Industry
- Cosmetic Industry
- Production Automation
- Rubber/Tire Industry
- Paint Industry
- Cleaning and Hygiene Products Industry
- Formulation and Mixing Processes

We can generally divide the dosing systems into two. We can examine them under two headings as solid and liquid dosing units. The advantages of dosing systems to production in general are stated below.

Recipe memories
Total monitoring while running
Automatic correction
Process indication and error messages
Bringing product quality to high standards
Lowering Costs
Minimizing the failure rate

- We can examine Food Dosing systems under 2 general headings.
- Liquid Dosing Units
- Solid Dosing Units

Liquid Dosing Units

It is the dosing of 2 or more liquids in the desired type and in the desired amount depending on the whole production with the liquid dosing system. By means of the control unit, filling is carried out with a pump or free flowing fluid. Filling rates are controlled by flowmeters, and the controller is constantly informed. If the desired level of mixing is not achieved, the production is stopped. Chemicals, liquid foods, liquid mixtures and all such fluids can be stored in a container at the end of the dosing process or sent directly to the production line.

Solid (Batch) Dosing Units

It is the dosing of 2 or more liquids in the desired type and in the desired amount depending on the whole production with the solid dosing system. Solid (batch) dosing systems are systems that dose in accordance with the desired recipe with the help of helix, screw, belt, conveyor, vibratory systems, blowers and free flow. Dosed products are controlled by measuring weights with the help of a loadcell.

EKİN ENDÜSTRİYEL

SUBSTATIONS

INDUSTRIAL AND FOOD
GRADE SYSTEMS

MIT Substations

MIT apartment hot water supply stations combine the economy provided by central heating systems with the advantage of independently determining the comfort conditions of individual systems. Thus, this system, which significantly reduces energy expenditure, helps to maintain a fair balance in central system fuel expenditures.

The MIT apartment hot water supply stations, which are installed in the entrance of the apartment and fed directly from the central hot water boiler, also prevent pressure differences in the apartment heating installation and thus the problems that will arise.

"Comfort and Independent Use" in Central Heating Systems

With the Regulation on Energy Performance with Buildings (BEP), central systems have become mandatory in the housing structures with a large number of independent sections. MIT hot water stations can easily be applied to existing structures as well as in newly constructed buildings, allowing central energy systems to share their energy consumption costs for different usage preferences and quantities. Its compact design takes up little space and can be wall mounted. It is an attractive solution that provides modern, energy efficient, high comfort level for central heating systems.

System Features

There is no boiler in the boiler room; instead, the domestic hot water is produced with these heat exchanger units at the entrance of the building. These units include a compact heat exchanger providing instant hot water and a differential pressure control valve that provides a balanced distribution of water between the radiators and the heat exchanger.

Different control paths can be monitored in flat hot water stations.The controls are made only by the differential pressure control elements and by the control valves which are controlled by the programmable thermostats.

Technical Parameters

Nominal Pressure	: PN16
Heating Line Temperature	: Max.120 °C
Min. Domestic Cold Water Pressure	: Pmin=0,5 Bar
Exchanger Material	: AISI 316 Stainless Steel
Tubes	: AISI 316 Stainless Steel
Primary Circuit Pressure Loss	: 25-35 Kpa

Advantages of Flat Entrance Hot Water Stations

- MIT hot water stations eliminate the disadvantages of systems where domestic hot water is obtained by central boiler. For example; hot water recirculation line not to be drawn; and to save different areas of the boiler and pump.
- Can be used with any type or combination of fuel used by central systems.
- It is sufficient to draw only three pipelines, heating line, heating return line and cold water line.
- Eliminates the risk of legionellae due to the fact that water is not stored at the time of need.

- Thanks to the thermostatic mixing valve, the hot water is maintained at the set value.
- Thermostatic valve prevents overheating in the heat exchanger.
- There is no risk of electrical short circuit and gas leakage.
- Room temperature can be controlled independently.
- Service costs are low as maintenance is not required.
- Circumferential invoicing is provided by the integrated calorimeter.
- The risk of lime and bacteria formation is minimized.
- Can be customized and manufactured to meet the requirements.

Points Saved During Investment

- Boilers and counters.
- Heat Exchanger.
- Hot water meter because heating and usage of hot water is fed from the same line.
- Plumbing pipes, circulation pumps and ball valves.
- Since it is located in the unit, it is equipped with balancing valve and strainers.
- No chimney requirement (architecturally important).

Working Principle of Flat Entrance Hot Water Stations

While the hot water stations at the entrance are heated by a portion of the water coming from the central boiler room, the other units are the units where the heat exchanger is heated by the water from the hydrophore. Flat entrance stations are primarily domestic hot water and offer more comfortable hot water than boiler systems. Sudden and variable usage provides water at desired flow rate and constant temperature even in hot water demand.

The sequence followed in designing the system is as follows;
- Flow rate for pump and pipe sizing
- Boiler or district heating capacity
- Volume of reserve tank

The total flow rate depends on the flow rate of the heating circuit and is determined by the primary feed rate required for the heat exchanger. Depending on the parameters, the maximum flow rate is seen in summer or winter. When determining the pipe diameters, the equivalent factor and the domestic hot water need should be taken into consideration in the winter months.

If the domestic hot water control valve mechanically closes the radiator / underfloor heating supply circuit, it is understood that it needs 100% domestic hot water. If a valve without a mechanical stability feature is used, it should be considered and weighed whether domestic hot water is a priority

Components of the Flat Entrance Hot Water Stations

Heat Exchanger

The heat exchanger located in the station allows the hot water from the central boiler room to be heated through the heat exchanger to heat the water supply and to obtain domestic hot water. Plate Heat Exchangers are the devices that operate according to the principle of heat transfer between two different fluids with temperature difference between them. It is completely separated from each other by the fluid to be heated and the fluid plates to be heated.

In hot water station applications, plate heat exchangers are the main equipment in the use of hot water.

Thermostatic Mixing Valve

It ensures that the cold water coming from the network line is heated in the heat exchanger and the domestic hot water obtained goes to the taps at constant temperature. In addition, the temperature can be adjusted to the desired value of the hot water to reach the taps are prevented from scalding. In addition, since the hot water coming from the central boiler room is not required to go directly to the underfloor heating system in underfloor heating systems, the temperature is fixed to the desired value by the thermostatic mixing valve.

Thermostatic Valve

It ensures that the cold water coming from the network line is heated in the heat exchanger and the domestic hot water obtained goes to the taps at constant temperature. In addition, the temperature can be adjusted to the desired value of the hot water to reach the taps are prevented from scalding.

Provides proportional operation without the need for any external energy.

Differential Pressure (ΔP) Control Valve

It is used to control the differential pressure in the radiator line.

One of its tasks is to generate an extra pressure in the radiator line according to the heat exchanger line and to direct the heating water to the heat exchanger when there is consumption in the water line. ΔP controlled valve ensures parallel operation in radiator and heat exchanger circuit. Furthermore, the entire system is balanced and pressure differences between the coats are prevented.

PM Regulator

When there is any flow in the network line, it directs the heating line to the heat exchanger in a proportional manner according to the flow rate. By controlling the pressure in the heating line, it acts as a balancing valve. As soon as hot water is used, the flow from the central heating boiler room to the heat exchanger is interrupted and the heat exchanger is prevented from calcining.

Components of the Flat Entrance Hot Water Stations

IHPT Thermostatic Directional Valve

When there is any flow rate in the network line, it directs the heating line to the heat exchanger in a proportional manner according to the flow rate. By means of thermostatic control on it, it is possible to set the domestic hot water to a constant temperature and prevent the scald risk and the legionella bacteria in the taps.

Calorimeter

It calculates the heat loss of the hot water coming from the central boiler room and the heat loss of the heat exchanger in the circle. It is possible to view, bill, or even limit the usage. The bacteria will be prevented.

Room Thermostat

The motorized valve inside the station is controlled by the room thermostat to ensure the comfort temperature in the circle.
The flow rate of the hot water coming from the central boiler room is proportional to the room thermostat control and it is ensured to be extra savings and ease of use in our economical system.

Standard Unit Coverage

- Galvanized or stainless steel mounting plate
- Plate heat exchanger
- Thermostatic valve
- Differential pressure (dP) control valve
- Directional valves
  - IHPT ermostatik Directional Valve
  - Accelerator
  - PM Regulator

Thermostatic Valve

It ensures that the cold water coming from the network line is heated in the heat exchanger and the domestic hot water obtained goes to the taps at constant temperature. In addition, the temperature can be adjusted to the desired value of the hot water to reach the taps are prevented from scalding. Provides proportional operation without the need for any external energy.

Cold Water Meter

It calculates the use of the water from the grid directly before being guided to the taps and the heat exchanger, and there is no need for an extra space in the installation, saving space and making our heat station compact. The amount of usage can be read on the meter or it can also be read or billed via M-BUS system.

Collector Groups

Before the hot water from the central boiler room is directed to the heating line, it can be separated by the return and return collector so that all radiators in the Before the hot water from the central boiler room is directed to the heating line, it can be separated by the return and return collector so that all radiators in the.

Equipment that can be added optionally depending on the project

- Cutting beads
- Strainer
- Strainer at the entrance to the water
- Collector groups
- Room thermostats
- Hot water recirculation line and pump
- Thermostatic 3-way mixing valve for underfloor heating
- Frequency controlled pump
- Cooling line
- Heat meter (calorimeter)
- Cold water meter
- Cabinet with lid

MITx D Features

Product Features

- MIT the difference in pressure valve DN15 (5-25 kPa)
- MIT Thermostatic valve DN20 (20-70 °C) with special sensor
- MIT brazed heat exchanger
- Isolation of heat exchanger AISI 316 stainless steel piping
- Galvanized Sheet

Equipment That Can Be Added As An Option

- Protection Cover
- Ball Valve (DN20)
- Silt Trap (DN20)
- Motor Operated Valve (DN20)
- Place the Calorimeter Assembly
- Place the Water Meter Assembly

Types

- MIT-1D (35 kW)
- MIT-2D (45 kW)
- MIT-3D (55 kW)
- MIT-4D (60 kW)
- MIT-5D (65 kW)
- MIT-6D (70 kW)

MITx S Feature

Product Features

- MIT Thermostatic valve DN20 (20-70° C) with special sensor
- MIT brazed heat exchanger
- Isolation of heat exchanger AISI 316 stainless steel piping
- Galvanized Sheet

Equipment That Can Be Added As An Option

- Protection Cover
- Ball Valve DN20
- Silt Trap DN20

Types

- MIT-1S (35 kW)
- MIT-2S (45 kW)
- MIT-3S (55 kW)
- MIT-4S (60 kW)
- MIT-5S (65 kW)
- MIT-6S (70 kW)

MITx DY Features

Product Features

- MIT the difference in pressure valve DN15 (5-25 kPa)
- MIT Thermostatic valve DN20 (20-70° C) with special sensor
- MIT brazed heat exchanger Isolation of heat exchanger
- Underfloor heating kit (WILO 15-6) frequency controlled
- Circulating pump + Thermostatic valve + Check valve
- AISI 316 stainless steel piping
- Galvanized Sheet

Equipment That Can Be Added As An Option

- Protection Cover
- Ball Valve DN20
- Silt Trap DN20
- Motor Operated Valve DN20
- Place the Calorimeter Assembly
- Place the Water Meter Assembly

Types

- MIT-1D-Y (35 kW)
- MIT-2D-Y (45 kW)
- MIT-3D-Y (55 kW)
- MIT-4D-Y (60 kW)
- MIT-5D-Y (65 kW)
- MIT-6D-Y (70 kW)

EKİN ENDÜSTRİYEL

THERMOREGULATORS

INDUSTRIAL AND FOOD
GRADE SYSTEMS

Wet and Oil Type Mold Conditioners

Thermoregulators can also be called heat regulators in short. The products developed by MIT engineers are mainly designed to achieve precision in mold heating and cooling processes, to obtain high quality products, and to perform gradual heating and cooling.

Thermoregulators are used as tools that provide the necessary precision, especially in applications where the temperature must be regulated very specifically, such as mold heating and cooling processes. In the mold industry, high quality products can only be obtained thanks to this sensitivity.
There are many different mold techniques and all of them use thermoregulators as a heat regulator. For example, the mold temperature required in plastic injection machines is different during and after filling. The mold must be at a high temperature so that the high-temperature liquid does not freeze while filling the mold and its structure does not deteriorate. After filling, the mold must be cold so that it solidifies in the most appropriate time and is ready to leave the mold. For this reason, MIT thermoregulators (mold conditioners) are often used in plastic injection machines to provide thermal balance.

It is essential to use a quality thermoregulator to produce quality products with plastic mold injection. In order for the liquid plastic to remain liquid, it first needs a stable heat balance and then a rapid cooling to freeze. It is nigh impossible to fulfill these two conditions without using a thermoregulator.

MIT brand thermoregulators provide this optimization with resistors while heating and with the cooling water drawn from the chiller line while cooling. In cases where cooling water cannot be provided, MIT brand complete cooling systems are installed to complement the thermoregulator. Thanks to this working principle, efficiency increases, energy consumption decreases, most importantly, time is saved and production capacity increases.

What does Ekin Endüstriyel target with MIT Thermoregulators?

- Complete product manufacturing.
- High quality surfaces and low material loss.
- Low internal stresses and high durability.
- Getting rid of post-mold processes (deburring, painting, etc.)
- Decrease in cycle time and increase in production amount.
- Reducing energy usage.

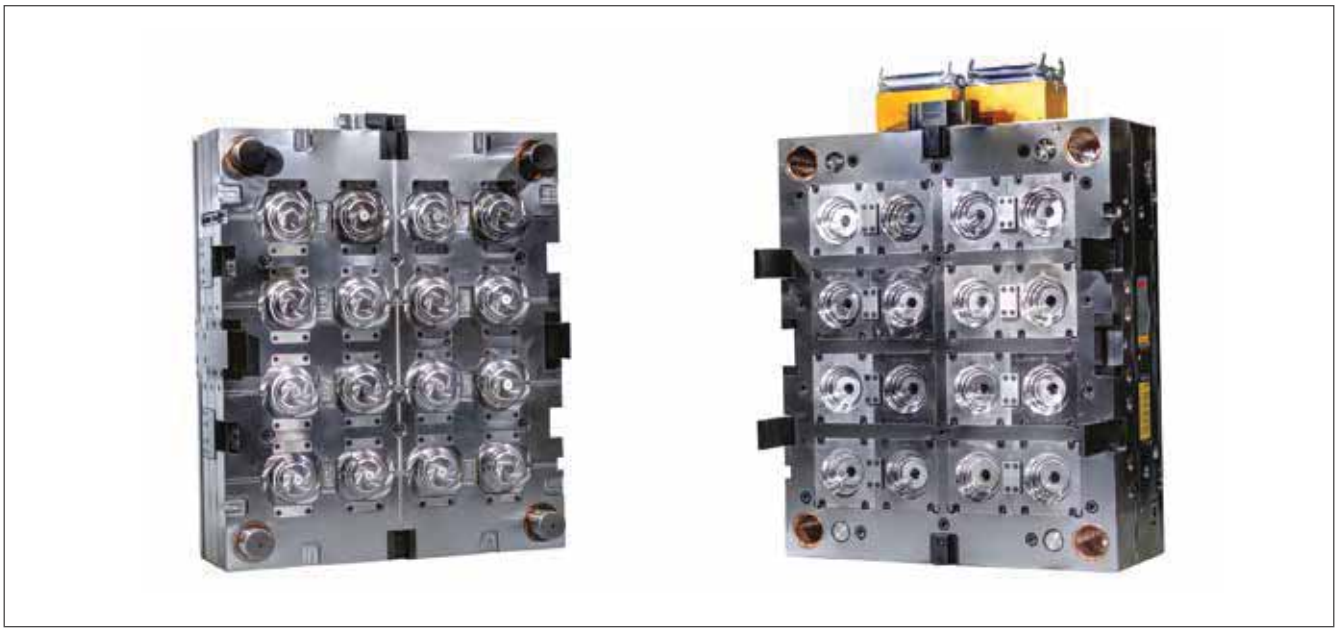

Our products are designed and produced completely according to your demands.

WATER TYPE THERMOREGULATORS (MOLD CONDITIONERS)								
Model		MIT TRG-S-6	MIT TRG-S-9	MIT TRG-S-12	MIT TRG-S-24	MIT TRG-S-36	MIT TRG-BS-6	MIT TRG-BS-12
Heating Power	kW	6	9	12	24	36	6	12
Max. Temperature	°C	120	120	120	120	120	180	180
Fluidity		Water	Water	Water	Water	Water	Water	Water
Pump Power	kW	0,55	0,75	1,5	2,8	4	0,55	1
Max. Pump Flow	lt/dk	27	42	74	90	100	25,5	50
Max. Pump Pressure	bar	3,8	5	6,2	8	8	4,8	5,8
Tank Capacity	lt	3	3	3	7,4	17,7	3,4	3,4
Number of Heating Tanks		1	1	1	2	3	1	1
Control Systems		PID	PID	PID	PID	PID	PID	PID
Cooling Systems		Direct	Direct	Direct	Direct	Direct	Indirect	Indirect
Temperature Control Sensitivity	°C	0,5	0,5	0,5	0,5	0,5	0,5	0,5
Mold Connector Dimensions	İnç	3/4	3/4	1	1	1	3/4	3/4
Weight	kg	55	60	69	140	150	80	95
Dimensions (HxWxD)	mm	700x350x900	700x350x900	755x320x900	900x407x1009	928x407x1000	750x320x770	750x320x810

OIL TYPE THERMOREGULATORS (MOLD CONDITIONERS)									
Model		MIT TRG-Y-6	MIT TRG-Y-9	MIT TRG-Y-12	MIT TRG-Y-24	MIT TRG-Y-36	MIT TRG-YS-6	MIT TRG-YS-12	MIT TRG-YS-24
Heating Power	kW	6	9	12	24	36	6	12	24
Max. Temperature	°C	200	200	200	200	200	300	300	300
Fluidity		Oil	Oil	Oil	Oil	Oil	Oil	Oil	Oil
Pump Power	kW	0,55	0,75	1,5	2,8	4	0,5	1	2,8
Max. Pump Flow	lt/dk	27	42	74	90	100	28	58	100
Max. Pump Pressure	bar	3,8	5	6,2	8	8	4,8	5,8	8
Tank Capacity	lt	6	6	6,8	11	14	6	6,8	16
Number of Heating Tanks		1	1	1	2	3	1	1	2
Control Systems		PID	PID	PID	PID	PID	PID	PID	PID
Cooling Systems		Indirect	Indirect	Indirect	Indirect	Indirect	Indirect	Indirect	Indirect
Temperature Control Sensitivity	°C	0,5	0,5	0,5	0,5	0,5	0,5	0,5	0,5
Mold Connector Dimensions	İnç	3/4	3/4	1	1	1 1/4	3/4	1	1
Weight	kg	65	70	100	145	155	75	100	190
Dimensions (HxWxD)	mm	700x350x900	700x350x900	755x320x900	900x407x1009	928x407x1000	695x280x740	1000x400x800	1050x515x910

EKİN ENDÜSTRİYEL

PASTEURIZERS

INDUSTRIAL AND FOOD
GRADE SYSTEMS

Pasteurizers

Pasteurizer systems are used in the food industry for the purpose of purifying the prepared beverages from bacteria and microorganisms. It works with the principle of cooling the product to high temperature in a very short time and cooling it suddenly. The shelf life of the pasteurized product lasts up to 1 year. As Ekin, we produce low energy and high efficiency pasteurisation systems which are suitable for your production capacity.

Ekin, determines the most suitable pasteurizer technique for you, realizes the necessary engineering calculations, determines the necessary equipments for the system, makes the production, transports to the field and performs the installation procedures. In addition, it activates the system and periodically checks the system values after commissioning gives all kinds of maintenance service and spare parts guarantee.

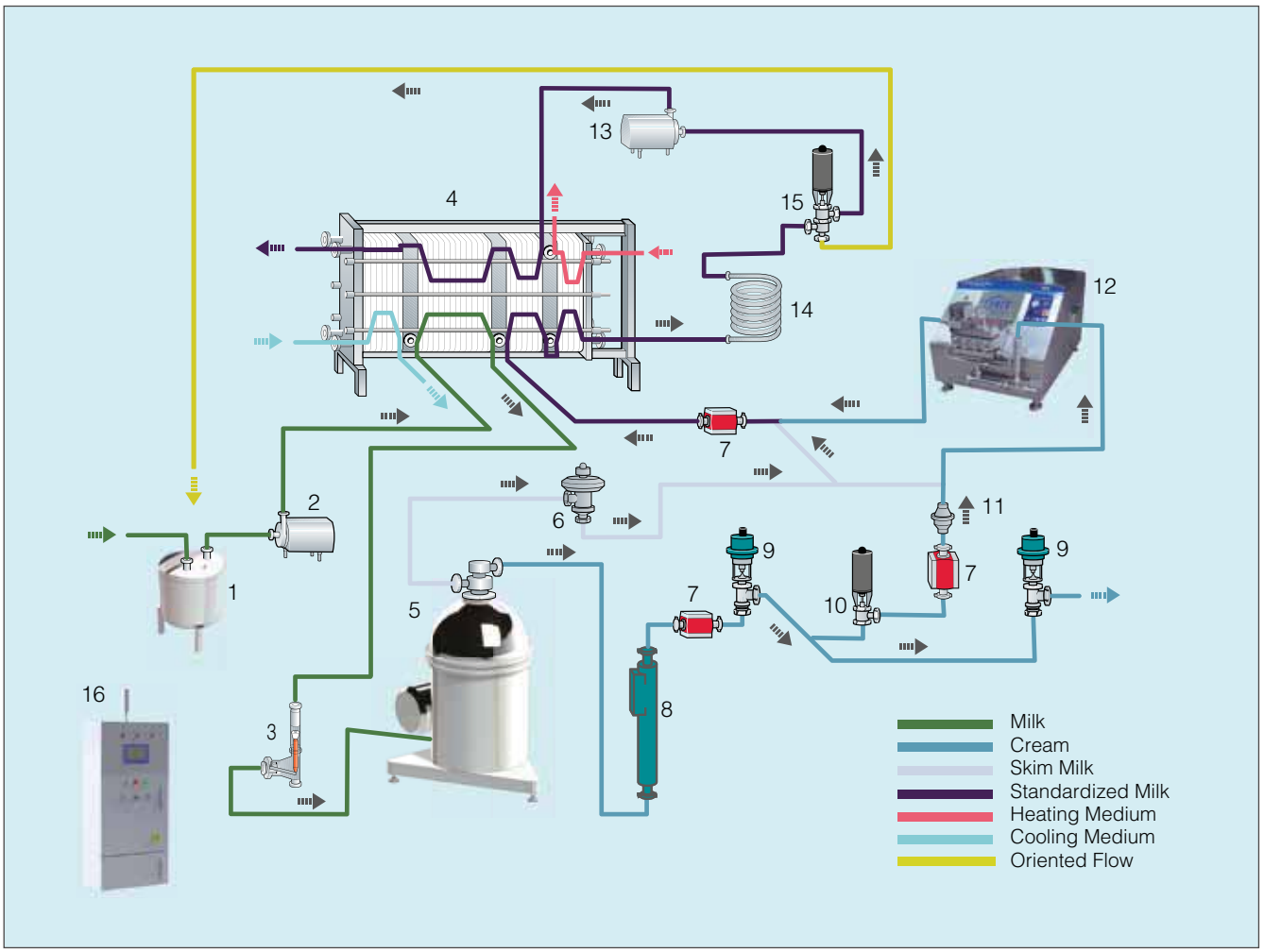

1	Balance Tank	5	Separator	9	Regulating Valve	13	Reinforcement Pump
2	Feeding Pump	6	Fixed Pressure Valve	10	Closing Valve	14	Holding Tube
3	Flow Controller	7	Flow Transmitter	11	Safety Valve	15	Flow Deflection Valve
4	Plate Heat Exchanger	8	Density Transmitter	12	Homogenizer	16	Process Control

Working Principle of Pasteurizers

The processes that milk passes through the production line are shown. The milk enters the factory with the equilibrium tank (1) and pumped to the preheated plate heat exchanger (4) before proceeding to a separator (5) producing skim milk and cream.

Market type milk standardization takes place in the inline system. The slider / oil ratio in the separator is adjusted to the desired level and then kept at this level regardless of the flow and oil content of the incoming milk. The fat content of the slip is usually set at 35 to 40%, but it can also be adjusted at other levels for special production. Once the slider and oil ratio are adjusted, the regulator valve is always kept constant by means of the controller consisting of the flow transmitter (7) and the density transmitter (8). In this example, partial homogenization is used.
This system is preferred because the process can be carried out with a smaller homogenizer (12). In this way, less energy is consumed while homogenization is carried out.
After the standardization process, the slider flow isdivided into two. The first one, which has enough oil content as a result of the processes, is sent to homogenizer, the other current slip operating line consisting of the remaining slider. The capacity of the homogenizer is carefully calculated and fixed at a specific flow rate. Since the fat content of the milk to be homogenized can be maximum 10% and the skimmed fat ratio is 40% on average, the slurry must be diluted with skim milk before the process.
In the partial homogenisation process, the homogenizer is also connected to the skim milk line; so you always have enough products to work properly. The relatively low slider stream is thus equilibrated with skim milk up to the nominal capacity. After homogenization, the cream with 10% fat is mixed with 3% skimmed milk powder before pasteurization. The milk with the standard oil content can now be pumped into the heating section of the heat exchanger to be pasteurized.
The required waiting time is provided by a separate holding tube (14). During pasteurization, the temperature of the milk is continuously recorded.
The Booster Pump (13) raises the pressure of the milk being treated so that the pasteurized product is not contaminated with raw milk as a result of any leakage in the plate heat exchanger.
Any drop in temperature of the pasteurized product is determined by the temperature transmitter. A signal activates the flow deflection valve (15) and flows back into the milk balance tank. After pasteurization, the milk is transferred to the cooling section in the heat exchanger. After cooling down with the raw milk which is continuously coming, it goes to the non-treated milk and then to the cooling section where it is cooled with ice water. It is then pumped into cold milk filling machines.

Standardization

The purpose of standardization is to deliver milk to a certain fat content. This rate varies significantly from one country to another. Common values are 1.5% for low fat milk and 3% for normal milk; however, there are low fat ratios of 0.1% and 0.5%. Oil is a very important economic factor. Therefore, the standardization of milk and cream should be carried out with great accuracy.

Pasteurization

With proper cooling, pasteurization is one of the most important processes in the processing of milk. With correct application, milk has a longer shelf life due to pasteurization. Temperature, pasteurization time, milk quality and shelf life information are very important factors that should be specified precisely. The pasteurization temperature for a milk of normal quality with HTST pasteurized is usually 72-75 °C and is maintained at this temperature for 15 to 20 seconds. The process of pasteurization may vary from country to country according to national legislation. A common requirement in all countries is that thermal processing guarantees the destruction of undesirable microorganisms and all pathogenic agents without damaging the product.

Homogenization

The aim of homogenization is to disintegrate the fat globules in the milk or distribute them homogeneously to reduce digestion. Homogenization may be complete or partial. Partial homogenization is a more economical solution. Thus, a smaller homogenizer may be used.

Processing Applications for Daily Products

We are a manufacturer of machining solutions, equipped to assist you in the processing of daily products. Whether you're producing milk for room temperature milk dispensing or a cold chain or fermented products or daily products, we're on your side to process this delicate product.

Cost - Effective

Considering the excessive price pressure in milk, the biggest challenge faced by producers is to keep total cost of ownership under control. Our products are designed to optimize the productivity of daily equipment and help you achieve the desired product quality at the lowest possible cost without sacrificing food safety. In the regions where large milk production is made, mega dairies are emerging in a way that provides unprecedented economies of scale.

Experience

In order to help our customers get the most from their milk, we are constantly increasing the efficiency and precision of our systems by combining our application experience with the latest technologies.

Cleaning

We are with you in the transition of the industry from mass production to continuous production with numerous advantages. The CIP system reduces on-site cleaning requirements and the footprint of production lines, while saving content and minimizing product losses. Automation is another important feature of modern daily farm, which increases productivity and offers valuable data for continuous improvement.

Environment

Reducing environmental impacts is important for the daily industry. It is also a growing phenomenon for consumers. In all equipment and solution development processes, we focus on minimizing electricity consumption and reducing product losses due to processing. To further reduce losses and provide filtration or separation processes for other product uses, we offer systems that allow recovery of proteins. We help recycling and improve the quality of waste water and reduce the environmental impact of daily products.

Target

Target trends and lifestyle also show a continuous variation. For example, "healthy" products have long been popular, but the healthy definition of the customer has changed over time. It was once synonymous with a low fat ratio, but later started to mean "reinforced" (eg calcium, minerals and Omega 3 reinforced), and recently the focus again changed. Nowadays, the word healthy is more about reducing lactose and adding protein. Our market intelligence experts follow the development of these global consumption patterns by analyzing and applying what they have learned to help you meet your evolving market needs.

Milk Powder

Milk powder is a durable and nutritionally high milk product obtained by pulverizing the dry matter formed by evaporating and condensing milk water. Water ratio varies between 1.5-4%. Milk related problems include short shelf life, long transport distance and storage costs. It is usually a better option to pre-dust it. Milk powder is a useful format thanks to the flexibility of processing with a wide variety of products. Generally, the powder is locally recombined and used instead of liquid milk when there is no local milk or if it is not cost-effective. Turning liquid milk into powder is a great way to increase shelf life and reduced transport costs make milk transporting long distances efficient.

Thanks to the improved energy saving, evaporators and dryers, Ekin is at your side with a good team of experts to serve the growing milk powder industry. Our solutions are designed to meet the efficient and economic production needs of manufacturers as well as to achieve economies of scale.

Pasteurized and ESL Milk

Nowadays, the most known and applied heat treatment in drinking milk production technology is pasteurization and UHT technology. A short-lived but fresh product is obtained by pasteurization. With UHT, a product with a long-lasting but sensory taste is obtained. In this context, ESL technology is a new method developed to provide a longer-lasting and sensory product to consumers than pasteurized milk. This method; microfiltration, baktofigration, stressed electrical field, high pressure applications such as the process may also contain. The milk packaged under hygienic conditions with this method has a longer shelf life than the pasteurized milk as long as it is stored at the refrigerator temperature.

With this technology, a product that can be kept for 45-60 days and sensitively closer to pasteurized milk is obtained.

Cream

It is the pasteurizer used for pasteurization of cream. Cream is a delicious daily product consisting of a high creamy layer of milk remaining when the light oil rises to the surface. In industrial cream production, the process is accelerated using seperators or centrifuges.

Cream products are unique in creating new flavors, strengthening other flavors and providing a soft consistency for both cold and hot dishes.

It is a special product that requires precise and accurate processing.

The most important stage of production is the separation of cream from raw milk. Ekin understands this process very well for you and we can provide you with advanced equipments to extract the required sensitive oil content. In addition, our machines are designed with hermetic systems, which enable to remove insoluble air from the product to ensure precise heating and pumping.

Flavored and Formulated Milk

It is the drinking milk obtained by the pasteurization process of the pathogenic microorganisms without destroying the natural and biological properties of raw milk completely, by the destruction of most of the other microorganisms, and immediately after pasteurization, to a temperature not exceeding 6 °C in a short time.

In order to obtain different products, pasteurized milk is produced in different units by using aroma recipes in the desired aroma (cocoa, strawberry, banana etc.) to produce healthy milk.

An ideal way of laying value on such products is through some specific challenges, such as taste, durability and consistency. However, there are other important considerations; such as the addition of calcium or protein to the milk, or preventing the Omega 3 from giving fish a taste of the milk, by dissolving or separating a cocoa powder particle. You can try recipes at our product development centers and find the ideal process for your product.

Fermented Milk

Fermented carbohydrates in anaerobic conditions by various microorganisms to break down into smallmolecule components. Fermented daily products are daily products with different consistencies and flavors obtained from different fermentations, in particular lactic acid fermentation, using a variety of starter cultures.

It is rich in fat, vitamins and minerals. As a result of the fermented, it can be used as buttermilk, kefir, curd cheese and sour cream. Products are composed.

The most important point that determines the nutritional value of foods is the composition of the nutrients they contain and their compatibility with the organism system and their digestibility. Nutrients in fermented daily products are highly nutritious, easy to digest, because they are pre-fermented by starter bacteria. We design systems that have high digestibility and partial degradation of protein and fat.

Concentrated and Condensed Milk

The products in this small but important sub-category are constantly sold in the markets where consumers are accustomed to aromas. For example, condensed milk is a common food item in India and is used for food and coffee in South America, parts of Africa, Asia, Spain and Italy.

The products are traditionally packaged in tins and are either sterilized in bulk or preserved by adding sugar. Today, we help customers successfully reproduce the condensed milk and flavored condensed milk aromas used by a continuous process.

In order to achieve the desired result in concentrated and condensed milk, we offer both technology and knowledge to make recommendations to the customers about the most suitable equipment and production method.

Milk Powder

Milk powder is a durable and nutritionally high milk product obtained by pulverizing the dry matter formed by evaporating and condensing milk water. Water ratio varies between 1.5-4%. Milk related problems include short shelf life, long transport distance and storage costs. It is usually a better option to pre-dust it. Milk powder is a useful format thanks to the flexibility of processing with a wide variety of products. Generally, the powder is locally recombined and used instead of liquid milk when there is no local milk or if it is not cost-effective. Turning liquid milk into powder is a great way to increase shelf life and reduced transport costs make milk transporting long distances efficient.

Thanks to the improved energy saving, evaporators and dryers, Ekin is at your side with a good team of experts to serve the growing milk powder industry. Our solutions are designed to meet the efficient and economic production needs of manufacturers as well as to achieve economies of scale.

Other Daily Products Pasteurization

This category contains small volume products containing milk-based or at least certain amounts of milk. Typical examples are; coffee and tea cream, buttermilk and lactic acid drinks. This includes creams other than daily products.

Thanks to our food expertise, we stand by our valued customers to help them develop the best processing methods for a particular product. We have references that can be used as a basis for your trouble-free and customized line solution.

We believe that the best solution to make you more innovative, more effective and more competitive is the solution that meets your specific production needs today and in the future. In addition, we believe that this most appropriate solution comes from our extensive knowledge of food production in closed partnership with you and the implementation of our complete range of innovative technologies

Recombinated Milk

In addition to UHT for efficient milk production, we have developed a portfolio of exceptional solutions for recombinant milk. Our unparalleled expertise gives you the more simple and intelligent line configurations (solutions that balance your budget with your performance goals), so you never pay more than you need, you always get the value that you pay for (the lowest possible total cost of ownership).

Thanks to technology, we offer you exceptional production, efficiency and flexibility, as well as stable product quality and minimized environmental impact.

Regardless of what you need to produce recombinant milk, Ekin technology offers you the lowest total cost of ownership, stable product quality, maximum flexibility, reduced environmental impact and guaranteed performance.

Beverage Processing Applications

We are a manufacturer of machining solutions, equipped to assist you in beverage processing applications. Whether you are distributing beverages at room temperature or producing carbonated and non-carbonated beverages or alcohol products for the cold chain, we are on your side to process this delicate product.

Innovative Ideas

Are you looking for next-generation new premium lemonades? Do you want to benefit from the opportunities of growing markets abroad, or would you like to add an energy drink or brewed lemonade to your portfolio? From the development of innovative ideas to the best natural ingredients and the reliable delivery of material systems, Ekin is your experienced and inspiring partner to optimize your production processes.

Right Choice

- Years of experience in worldwide markets, extensive expertise in the food and beverage industry.
- Short development times.
- Extensive portfolio of application-specific natural ingredients.
- All-in-one material systems: Ready-to-fill compounds.
- Comprehensive service solutions: Innovation Services, Quality & Food Safety Solutions, Supply Chain Services, Technical Services "Productivity" is a goal that is constantly changing in this huge, dynamic sector. It has emerged to provide unprecedented scale economy in large beverage production regions.

Cost-Effective

Our products are designed to optimize the efficiency of beverage products equipment and help you achieve the desired product quality at the lowest possible cost without sacrificing food safety.

"Productivity" is a goal that is constantly changing in this huge, dynamic sector. It has emerged to provide unprecedented scale economy in large beverage production regions.

Experience

We are constantly increasing the efficiency and sensitivity of our systems by combining our application experience with the latest technologies to help customers get the most out of their drinks.

Cleaning

We are with you in the transition of the industry from mass production to continuous production with numerous advantages. The CIP system reduces on-site cleaning requirements and the space footprint of production lines, while saving content and minimizing product losses. Automation is another important feature that increases the efficiency of the modern plant and offers valuable data for continuous improvement.

Environment

Reducing environmental impacts is important for the beverage industry. It is also a growing phenomenon for consumers. In all equipment and solution development processes, we focus on minimizing electricity consumption and reducing product losses due to processing.

Fruit Juice Pasteurizers

It is a system produced for pasteurization of products such as fruit juice, nectar, low acid, isotonic and pulp drinks. Optionally, the deaerator may be added to remove dissolved oxygen in the product. Also, homogenizer which can be used in pulp products will be an option increasing the product quality. The system can be designed as fully automatic, semi-automatic or manual system. Pasteurizes are completely hygienic and manufactured according to food technology.

Our high precision blending equipment keeps product losses at a negligible level and adds the right amount of water.

With the increasing importance given to health and fitness, consumers expect brands to be honest and transparent in this regard. To be the leading brands, to attract the attention of modern consumers and to trigger the imagination, our password is "to develop, be the first to design and to be the first".

Carbonated Soft Drinks

Given the high content costs and the low margins of the final products, the main challenge in carbonated soft drinks is to get the blend exactly right. You need to precisely mix and precisely control the pre-mixing and sugar content. Our material systems can significantly simplify your production processes. Ready to fill compounds contain all the ingredients of your drinks with the ideal composition. You do not need to change your production facilities and raw materials are used efficiently.

Our best-practice carbonated soft drink solution has the advantage of high blending accuracy and accuracy.

Our best-practice solution for pasteurized carbonated beverages eliminates the need for preservatives and thus helps you meet the demand for more natural products. It also has the advantage of high blending accuracy and accuracy. While providing the right quality at all times, you can quickly switch between products with negligible losses.

Non-Carbonated Soft Drinks

The key to success in carbonated beverages lies in the pre-mixing area. It is important to get the mixture exactly right and add the contents in the correct order.

When you combine the pasteurisation unit with our continuous-in-line blending system, you can not only achieve the perfect blend, but also reduce the product losses to about 100 liters. This is 0.5 per thousand of the final product volume of a complete production cycle. Ekin proven nectar and noncarbonated beverage lines provide some great advantages. Starting from the pre-mix area, we offer a selection of different mixers adapted to your specific product ingredients.

This ensures the lowest possible product losses with a blending system in combination with our pasteurisation unit. It ends with an aseptic tank where your product can be transferred safely to the filler.

Pulpy Drinks

Drinks containing small or tiny particles are extremely popular. These products can be blurry, dark, soft or large-particle with different difficulty sequences.

For example; when adding fruit pieces, it is very important that the particles are whole and evenly distributed.

The particles can help you safely pasteurize the transport liquid without overcooking and we can make the most of your expensive raw materials.

We can help you pasteurize the particles transport liquid safely without overcooking and ensure you get the most out of your expensive raw materials.

Tea

Water then tea is the most widely consumed drink in the world. It has long been supported because it has various health benefits. There are also numerous varieties. Basically, you can add all other flavored content types, starting with one of six different types of main.

The main challenge is to reduce raw content costs and get the best yield from the leaves. It is also important to remember that tea is a low-acid product that must be heat treated properly.

Sterilizers for heat treatment of your product; seperators to remove leaves and expel tea; mixers for adding sugar and aroma; Ekin is your biggest supporter for you to produce blending equipment, ie safe and exquisite tea drinks.

Syrup

Syrup pasteurizer is a fully automatic system for mixing the syrups, fruit concentrates, water and acidity regulators in the right proportions according to the prescription. The product will be ready for pasteurization in final syrup tanks.

The system consists of a control panel, a sugar thawing unit, a concentrate unit and a final product tank, and a valve assembly that connects them to lines.

Ekin, which introduces itself in terms of country by fruit juice and syrup plant projects, is also increasing its fruit juice / fruity beverage / isotonic beverage / energy drinks etc. at international level. and offers the process solutions for the production of demands according to the latest technology.

Coconut Milk

Thanks to the beneficial properties of coconut health, this segment has seen remarkable growth in recent years. However, this is one of the most difficult raw materials to work with. Coconut is a scarce source and after crushing, the liquid in it quickly becomes pink and gets a bad taste. Fast processing is extremely important to avoid product waste.

Our experts are highly experienced in the production of coconut products. They can help you design a process to preserve the aroma of coconut water in your hands and to help you convert the remaining ingredients into other products, such as coconut milk or cream.

Ekin coconut milk lines provide the highest level of taste and nutritional control to ensure product quality.

Soy

It is used in the production of many products such as soy, milk equivalent products, mixed drinks with traditional soy drinks, fruit juice and soy and soy knead (for people sensitive to lactose). The biggest challenge faced by manufacturers is to get the right taste. From the traditional strong bean-flavored taste in different parts of Asia to non-bean-flavored taste and generally to the non-bean-flavored milky aroma that adapts more to the Western taste, consumer preferences throughout the world vary greatly. Our experts are ready to help you get the right taste profile.

Our experts' knowledge of heat transfer technology in low acid products provides a safe end product and our processing equipment is designed to maximize earnings.

Alcohol

It is a flow-proof pasteurizer designed for pasteurization of beverages, beer, cider or similar carbonated beverages before filling into bottles or bottles. The design and construction of the units are carried out according to the requirements of the food processing industry.

The design can be cleaned with CIP system (using alkaline solution and disinfectants), the units can also be disinfected with hot water. Making cleaner production in the alcoholic beverages industry prevents or minimizes the negative environmental impacts that can occur during the product life up to the final use of the raw material into a product.

As Ekin, we provide right and exact solutions by projecting according to the requested demands.

Egg Pasteurizers

The egg pasteurizer is used for pasteurization of egg liquid products (egg white, egg yolk, whole egg). Pasteurization stops the vital activity of pathogenic bacteria Escherichia coli, forms such as brucellosis and heat resistant bacteria. Advantages of egg pasteurization machine compared to other machines are; no need to get hot water boiler, no need to buy a homogenizer, may be listed as having a precise temperature control.

It is developed for the production of high quality egg products, 100% egg liquid mixed or can pasteurize the yolk and white separately.

With its compact design, it can even fit into small areas. It is capable of pasteurization at high temperatures without requiring long-term cleaning.

Ice Cream Processing Applications

We are a manufacturer of machining solutions, equipped to assist you in ice cream processing applications. We are at your side for the precision processing of cold chain.

Smart Solutions

As Ekin family, we are working on new product solutions for you and we benefit from the unique diversity of the latest technologies. We are taking steps to turn new trends and ideas into promising innovations for your company.

From Idea to Production

Our material systems can significantly simplify your production processes. You do not need to change your production facilities and raw materials are used efficiently. With our integrated services, we support you from the first product idea to production.

Cleaning

We are with you in the transition of the industry from mass production to continuous production with numerous advantages. The CIP system reduces on-site cleaning requirements and the footprint of production lines, while saving content and minimizing product losses.

Custom Content for Your Application

Ekin, with its wide portfolio of natural ingredients and wide application, is moving. In this way, is developing content that perfectly matches your product. The spectrum spreads from fruity and dark aromas, fruit purees and fruit pieces to crispy crumbs, bubbles, and much more.

Productivity Equals Quality

Whether you're looking for a great advantage or a high-quality snack, naturally, you'll want to offer your consumers the most attractive product at the best price. While 80% of the value of the products lies in the contents, both the precise dosing and the lowest amount of waste are the main factors in the equation.

All of our ice cream production equipment is designed to optimize productivity to help you achieve the best quality level at the lowest possible cost. Well-designed lines with improved temperature control ensure a consistently high quality product and guarantee renewability.

Cost Reducing

Our products are designed to help you optimize the efficiency of ice cream products equipment and reach the desired product quality at the lowest possible cost without sacrificing food safety.

Ekin will provide you with a suitable system for you if you want to give your ice cream an intense vanilla, hazelnut taste, an attractive color or what features you want.

All-in-one preparations for flavors, colors, flavors and purees contain all the ingredients you need for your ice cream, which are accurately coordinated and adapted to your production processes.

Open up the door to new markets and target groups by introducing your own alternatives to new concepts such as vegetarian, reduced fat or reduced sugar alternatives, frozen yogurt with various overcoats, or ice cream. Ekin is developing the right product solutions for you, including alternative food categories and beverage industry.

Cheese and Whey Pasteurizers

Cheese Processing Applications

We are a manufacturer of cheese processing solutions to help you with cheese processing applications. We are at your side in this precision production process for all kinds of cheese you produce.

Cost Reducing

Our products are designed to help you optimize the productivity of cheese products equipment and reach the desired product quality at the lowest possible cost without sacrificing food safety.

Experience

To help our customers get the most out of their cheeses, we are constantly increasing the efficiency and precision of our systems by combining our application experience with the latest technologies.

Cleaning

We are with you in the transition of the industry from mass production to continuous production with numerous advantages. The CIP system reduces on-site cleaning requirements and the footprint of production lines, while saving content and minimizing product losses.

Quality and Safety

Ekin offers a complete range of equipment for the production of both cheese and whey, with the know-how to make the most of your raw ingredients.

Reliability

Designed and manufactured with a focus on hygiene, these machines are naturally clean, allowing manufacturers to run longer production cycles between cleaning stops. This is just one of the many ways we contribute to your plant's efficiency and safety.

Technology

The use of milk whey content is now considered to be of utmost importance for long-term competitiveness. Therefore, we offer a range of technologies for the extraction of whey extracts and liquid and powder ingredients derived from whey.

Performance

Designed for high volume production, Ekin tried and tested lines meet the economic need of large customers. These lines come with performance guarantees for added convenience.

We are with you in customized products

Mass production may be at a higher level than ever before, but there is a counter-tendency to each trend. In the cheese world, these are farm varieties. Special cheeses, which are based on classical recipes and are historically linked to certain regions, are becoming increasingly popular. In the production of smaller volumes or special products, Ekin offers different liter and volume line equipment.

Successful production requires maintaining milk quality and eliminating negative particles during sensitive processes to ensure high quality and efficiency. Ekin provides the application of gentle and effective heat and pumping, which is essential to achieve optimum quality and yield of components.

Cheese producers should be confident that their facilities are flexible enough to adapt to changing customer preferences and that they can benefit from raw materials in the best possible way and at the most appropriate cost. To meet customer demand, manufacturers need to produce large quantities of quality products while meeting strict legal regulation requirements.

Ekin offers a wide range of hygienic equipment for the preparation of cheese for processing raw milk. Our equipment maintains product integrity while providing full traceability as well as the speed required to increase product throughput. Ekin hygienic equipments give cheese producers a complete peace of mind.

EKİN ENDÜSTRİYEL

CIP AND HYGIENIC
PROCESS SYSTEMS

INDUSTRIAL AND FOOD
GRADE SYSTEMS

What is the CIP System? What Function does it Serve?

CIP systems are units that provide automatic cleaning while aiming for the best cleaning in production lines with water and various cleaning solutions without disassembling machinery and equipment, as it done when manual cleaning. In other words, they are easy-to-use automatic systems that allow closed-circuit systems to be cleaned easily with a high level of hygiene.

The acronym stands for Cleaning In Place. This system is very effective in hygienic cleaning and has been used successfully for years, especially in high-capacity tanks, long and complex pipelines. This method, which is extremely important in terms of reducing the direct contact of personnel with hazardous chemicals, is easily used for cleaning long pipelines and large volume tanks.

CIP (Cleaning in Place) is an automated cleaning method, in which the production line or the tools and equipment in closed circuits can be cleaned by circulating the rinse water and chemical solution in the production line without the need for disassembly. With the CIP cleaning system, a high sanitation standard can be achieved. A healthy on-site cleaning, known in the industry as "CIP", is the most important element of the production process. Properly done CIP directly affects product quality. It minimizes contamination problems and extends the life of the equipment used. Most importantly, in terms of health and bacteria formation, CIP should be done before and after production.

CIP Systems provide direct cleaning of pipelines and inaccessible areas of machines with the help of water and chemicals without dismantling and removing equipment. With the circulation made directly from the tanks, process equipment such as pipelines, heat exchangers, valves, pumps become hygienic and ready for the next production. CIP systems guarantee fast, efficient and safe cleaning of all types of process equipment. Any closed container (tank, tanker, barrel, chamber, funnel or box) is cleaned using spray balls or rotating sprinkler assembly, thus avoiding unnecessary and uneconomical filling of containers with washing solution. Said application also eliminates the need for operators to climb into the tanks and mechanically scrub. All types of closed circuits including plumbing, pumps, valves and plate heat exchangers are cleaned in place. CIP systems are designed for cleaning both tanks and plumbing circuits. It is an advanced automatic cleaning system used for cleaning process equipment such as CIP modules, tanks, filling machines, pasteurizers, sanitary pipes, aseptic tanks, plate heat exchanger and other equipment.

CIP modules are compact units that offer a wide range of flexible solutions with capacities and options for every customer. The system is equipped with temperature, pressure, conductivity sensors and flowmeters. The system is controlled automatically with sensors. Fully automatic CIP units automatically control the PLC controlled cleaning time, chemical temperature, flow and concentration.

It is used in milk pasteurizing workshops, dairy products (ice cream, butter, margarine, yoghurt, etc.) production areas, to eliminate fat, protein and carbohydrate deposit problems in bottling and packaging sectors. It is used in the production of milk, fruit juice, butter, margarine, tomato paste, mayonnaise, and ice cream for in-situ (CIP) cleaning of heated and cold surface systems. Its use in automatic dosing units gives good results. It does not leave any stains or marks. It provides a definitive solution for cleaning proteins, carbohydrates and fats.

With the CIP cleaning system, a high sanitation standard can be achieved. However, it is obligatory to appropriately design the dairy establishments where the CIP system is used.
Hygienic planning of enterprises, hygienic selection of pipelines, fittings and equipment has great importance in the successful implementation of the CIP method.

The issues to be considered in the planning of the CIP system can be summarized as follows:

1. For an effective circulation, all surfaces should be able to be connected to the circulation line and all parts of the circulation line should be able to be cleaned at the same time.

2. All surfaces should be in contact with chemical solution and should be easy to clean. Any accumulation and sediment formation that might pollute products should not be allowed.

3. The material used in the construction of the tools should be of the same type, not affected by the chemicals and disinfectants used, and should be able to withstand the applied temperature.

4. In order for the same chemical or disinfectant to be used, the residues resulting from the production must also be of the same type.

There is a relationship between cleaning temperature, concentration, flow rate and time in CIP systems. The lack of one of these elements can be offset by an increase in one or two of the others. For example; temperature can be limited in cleaning processes. If the chemical concentrations are increased, the possible changes can be compensated by the temperature drop.

The efficiency of cleaning increases as the flow rate changes from laminar to turbulent, depending on the pipe diameter and temperature. Also, an increase in the temperature of the cleaning solution changes the physical state of the residue by accelerating chemical reactions. The CIP unit, which allows pre-/post-production line cleaning (sanitation) on-site, is not only suitable for use in the dairy industry, but also in the beverage, carbonated drinks and ready-to-eat food industry. Our systems are equipped with equipment that complies with high quality and standards. In this way, you protect your product and process safety at the highest level by getting the most accurate and up-to-date analyzes about your process with the lowest error margin. With this reliable system, advanced automation and software infrastructure, you can increase the safety and hygiene sensitivity of the whole process by being integrated with other systems and equipment in your business (requires optional features). It is important that CIP is carried out effectively and efficiently and contributes to the overall low cost of ownership (TCO) by, among other things, minimizing equipment downtime. Cleaning must be done in a safe manner as very strong chemicals are used that can be harmful to people, equipment and environment. Cleaning should be done in a way that has the least impact on environment by using the least amount of water and detergent and maximizing the reuse of resources. It is a simple and modular solution that is easy to install and use, which also offers high performance. It is cost-effective and provides economical use of water and chemicals. It's flexible, you can adjust the cleaning schedule or create your own schedule based on your specific production needs.

The main feature of all models is the circulation of water and washing chemical within the system. These systems, which operate fully automatically, have a conductivity meter device in order to save chemicals. Chemicals are recovered with chemical solution tanks, which are part of the system.
CIP systems can be designed with different capacities and features according to the requirement. To date, we have successfully completed the project design, equipment supply and factory installation works of many domestic and international facilities.

We offer a service guarantee for CIP systems, by designing the installation at the most affordable cost, manufacturing and mounting the equipment to be used in the facility, installation of the piping systems between the equipment and handing over the facility in operation. There is no standard CIP method that can be recommended for each unit and can give optimum results. Because some changes may be required depending on the situation of the enterprise and the production line. With the CIP system we have installed in your factory, your business will work more efficiently and time loss will be minimized. Labor is saved as there is no need for disassembly and assembly of tools and equipment. It also provides great comfort and safety for your employees. When necessary, there is no need to enter the tank or contact with chemicals.
By making efficient use of water, chemicals and heat, we aimed to save money and create a more hygienic working opportunity with CIP. The cleaning program is fully sustainable and there is no risk of re-contamination. With our engineer staff, we produce solutions for your needs. It provides turnkey service from project design.

Principles on which the CIP Method is Based

With the CIP cleaning system, a high sanitation standard can be achieved. However, it is obligatory to design the establishments appropriately where the CIP system is used. Hygienic planning of enterprises, hygienic selection of pipelines, fittings and equipment has great importance in the successful implementation of the CIP method.

The most important factor in cleaning pipelines is flow rate. Regardless of the pipe dimensions, the flow rate should be at least 1.5 meters/second for good cleaning. One of the most important problems in pipelines is the presence of dead spots or dead spaces. Often one of the outlets of the T-pieces placed in the pipelines for the installation of some new tools or relief valves is not used and these sections are extremely difficult to clean. The aforementioned outlet is called the dead section, should be kept as short as possible so that the cleaning solution reaches the dead spots. It is hygienically imperative that the pipes be made of seamless stainless steel and that argon welding is used where necessary. If the inside of the pipes is polished, cleaning can be done faster and microorganisms can be neutralized. It is very difficult to clean and sanitize rough surfaces. If advanced welding techniques are used, there is a difference between the pipe thickness and the weld thickness and there is no need for grinding and polishing such welds. If pipes are joined with a union, it is recommended to use unions approved by IDF (International Dairy Federation) or ISO (International Standards Organization) for this purpose. These unions, which can be cleaned in place without disassembly, are suitable for the CIP cleaning method. Since milk residues will collect in the gaps within the normal unions, it is not possible to clean them without disassembling them.

In order for large volume tanks to be cleaned with the CIP method, they must be manufactured in accordance with the principles of this method. The inner surfaces of the tanks must be smooth and polished. It is very easy for the milk residue to collect on unpolished rough surfaces and very hard to get rid of it by spraying.

Tanks must be equipped with spray heads in order to be included in the CIP system. Depending on the tank size and shape, one or more spray heads are used.
If there are sections in the tank where the agitator or probe gas equipment is enclosed, an additional spray head is required. There are different types of spray heads. In general, these are grouped into two as fixed and rotary. For example; spray heads with fixed spray ball are convenient and cheapest. The residue to be cleaned with the effect of not too dirty water and chemical solution can be cleaned with the spray ball. However, rotary jet nozzles with mechanical cleaning power should also be preferred to remove sticky residue.

Another important factor for the success of the CIP method is the correct determination of chemicals and their concentrations. The installation layout is very important for the CIP system. If a good placement is made at the beginning, there is no need to disassemble the production line when cleaning with the CIP system. Thus, avoiding time-consuming and laborious pipe dismantling work results in less time and labor spent. The tanks should also be designed as closed areas, the tank surfaces should be smooth enough to be cleaned by spraying, the spray heads should be designed to move 360° and reach every point. The most practical aspect of this system is that it can be cleaned effectively without dismantling the equipment.

CIP Methods

Single Use (One Time Use) CIP Method

It is the simplest of the CIP systems. It consists of a chemical tank, pump and various valves. In this system, the chemical is used once, then poured into the drainage channel. Chemical solutions used in such systems are effective for a short time. It is not suitable for multiple use or long-term storage. Before each use, it must be prepared fresh and in the required amount. This system is only used in small businesses. More than one CIP system can be built within one plant. For this reason, CIP equipment is usually very close to the process machines and the amount of detergent and water used is low. Severe residue collection occurs in some production units. In such units, the “single-use method” is applied quite successfully. Because the chemical solution gets soiled quickly. It is also not appropriate to reuse the already heavily soiled detergent solution. For example; the detergent solution must be discarded once used, while cleaning equipment that has a large amount of milk residues and equipment such as churn that is heavily contaminated and can be completely filled with detergent solution.

Single-use CIP units have low investment costs, are compact and easy to install, but have high operating costs. This cleaning unit can be operated manually or automatically. When the capacity of the dairy production is increased, the existing single-use CIP unit does not cause any problems.

Some single-use CIP systems can be expanded by adding a detergent spray arm, steam boost unit and most importantly a collection tank. In this case, the used chemical solution and rinse water are taken to the collection tank to be used once again in the next cleaning process and are treated. In the next cleaning process, it can often be used for pre-cleaning. However, it must be discarded after use.

Reusable CIP Method

The reusable CIP system has been developed on the principle of recovering the cleaning solution and reusing it as much as possible in order to reduce the operating cost. In order for the chemical solution kept at a certain concentration not to become too soiled and to be used as much as possible, pre-washing should be done very well and the initial coarse dirt should be removed with the rinse water. The reuse of the chemical solution may not be possible in the following cases.

1. When the production units are operated manually, continuity in cleaning cannot be ensured, so the solution cannot be reused.
2. Solutions used in the cleaning of separators with automatic cleaning mechanism must be discarded after being used once.
3. Heavily soiled solutions used to clean heavily soiled equipment are used once.

In this method, the programming of the process is extremely important. The CIP program must be determined according to the degree of contamination of the equipment to be cleaned and the character of the residue. Milk components, especially proteins, adhere to heat-treated surfaces by being denatured and hardened. As mentioned before, acidic cleaning solutions are needed to remove these deposits, which are expressed as milk stones. The equipment to be cleaned and the residue situation may require very different applications.

For this reason, it is not possible to give a specific order and concentration. Sometimes alkaline/acid, sometimes acid/alkaline, sometimes alkali/disinfectant can be applied, or sometimes only alkaline cleaning solution can be used. Depending on the degree of residue, there may be changes in solution concentrations. If different concentrations of cleaning solution are desired, a separate detergent tank should be used for each solution. Therefore, the cleaning program should be prepared by taking into account the density and character of the residue.

The tanks containing the detergents are generally heated continuously to ensure that the solutions are at a certain temperature. This allows cleaning to be done more effectively. It shortens the cleaning time and helps to use less steam in raising the detergents to required temperatures.
Loss of detergent solution may occur for any reason during the cleaning process. However, in this system, since the chemical is constantly circulated, the depleted portion is automatically replenished with the solution in the stock tank. The concentration of detergent solutions is important. For this reason, the solution concentrations in the tanks should be constantly monitored and should be corrected by adding detergent when the concentration decreases. In this system, it is mandatory to have a separate tank for each solution. If rinsing with hot water is required, having a separate hot water tank is beneficial in terms of time and energy savings. Such systems usually operate automatically and are managed from a single center. Therefore, the transmission pipes are very long and this causes excessive use of water and detergent solution. In such a system, it would be appropriate to heat with coils or a plate heat exchanger.

In the CIP cleaning unit, there are alkali and acid tanks, a water tank, a water treatment tank when necessary, a heating system, and CIP supply and return pumps. The CIP unit needs to be located in well-ventilated special rooms. In this method, there is no need to dismantle the pipeline. The pipeline can be cleaned on site without dismantling, and the entire system can be remotely controlled. In this method; The cleaning solution is carried to all tools and equipment that are desired to be cleaned through certain pipelines within the enterprise. The tanks, equipment and pipeline that are intended to be cleaned with the CIP system must be of hygienic standard. The biggest drawback of the reuse system is that if the water and detergent solution mix, solution concentration is likely to drop resulting in excessive chemical consumption. In order to prevent this; Since the chemical solution given to the system after pre-rinsing is mixed with the rinse water, it is not taken into the stock tank but given to the drainage channel. Likewise, in order to rinse the detergent solution, the first part of the rinse water, which is given afterwards, is poured into the drainage channel at the beginning, the next part is collected by giving it to the water collection, that is, the recovery tank.

In the CIP unit, the cleaning solution is heated by a coil. Two different concentrations of alkaline solution are used; solution with low concentration for cleaning tanks and pipes and the solution with a high concentration which is used for cleaning the plate heat exchanger. Concentrations of alkaline and acid solutions are provided by giving determined doses of concentrated chemicals to the feeding tanks by means of automatic pumps.

By adding CIP feeding pumps to this type of CIP units, it is possible to clean 5-15 times in a day by creating 2 circulation circuits.
Programs can be set in this type of cleaning systems depending on the determination of the tank capacity, circulation line volume and temperature requirements. If automation applications are carried out in modern dairy factories, cleaning operations can be managed from the central control section, via remotely controlled valves. In this type of CIP system, filling and emptying of the chemical tank, circulation, heating and concentration adjustment of the solution are done automatically.

Central Reusable CIP Method

This method is a centralized CIP method created by using the "Single-use CIP method" and "Re-use CIP method" together from a single center. The delivery of alkaline and acid solutions to the system is carried out from the same point by grouping them and placed in a place far from the area where the cleaning process is performed. With this method, tanks and pipelines can be cleaned on-site without dismantling.

In the multi-use CIP system, there are 2 tanks, a pump connected to the tanks, pipes in the circulation line, heat exchanger, spray arm, probe and control valves that adapt to various programs. One of the tank is used for alkaline cleaning solution and the other is used to recover water. A certain amount of chemical is added to the water drawn from the cleaning solution tank through the spray arm. The plate heat exchanger is used to heat the rinse water and cleaning solution. The addition of the heat exchanger to the system provides great convenience in easily detecting temperature changes, fully utilizing the capacity of the CIP tank, and heating water and chemical solutions. In this CIP unit, water, alkali and acid solutions can be automatically circulated through the circulation line at different times. It is not necessary to give the entire solution in the stock tank to the circulation line. This CIP unit is modular and all stages of the cleaning process can be adjusted perfectly, from the concentration of the chemical solution to the required heating processes. This method is a versatile system. Detergent concentration can be adjusted. For example; After a low-concentration cleaning solution has been used to clean lightly soiled equipment, it can be reused to clean heavily soiled equipment by adding chemicals. The amount of rinse water used in this method is quite low. Because the water is not sent directly to the drainage channel, it can be circulated in the circulation line. The amount of final rinse water that can be heated is also greatly reduced.

However, this method also has its drawbacks. Since the distance between the center where the CIP cleaning unit is located and the tools and equipment to be cleaned is very long, the connections between the circulation systems are quite long which causes the liquid remaining in the pipes is high and the rinse water remaining in the pipes dilutes the detergent solutions; therefore, the need to add detergent constantly and the heat loss increases the cleaning costs. Another disadvantage might be product residues causing blockages in long pipelines which raises the possibility of mixing the product and the cleaning solution. In order to overcome these drawbacks, decentralized reusable CIP methods have been developed.

Decentralized Reusable CIP Method

In order to eliminate the drawbacks of the central multi-use CIP method; a decentralized system has been developed by placing a pump, heat exchanger and a small tank near each equipment to be cleaned at certain locations within the enterprise. Although there are central stock tanks for acid and alkaline solutions in this method, the piping length required is drastically reduced.
It is necessary to make water connection, alkali and acid cleaning solution connections to the tanks located near the equipment. All these must also be connected to the heat exchanger. The cleaning program can be regulated via a control panel.

Concentration Controls of Detergent Solutions

It is possible to use titrimetric analysis to determine the concentrations of CIP solutions. Nowadays primarily electrical conductivity is used for this purpose. Detergents used in CIP are generally strong electrolytes. The electrical conductivity of the solution is constant at a certain temperature and a certain detergent concentration. The electrical conductivity increases in parallel with the increase in concentration. In summary, the concentration of the solution is the most important parameter in the electrical conductivity of the solution. The electrical conductivity of water is very low. Some electrolytes contaminate detergent solutions after cleaning. The presence of electrolytes will contribute to the electrical conductivity of the detergent. However, in practical applications, the effect of these two elements on the electrical conductivity of detergent solutions is considered insignificant, due to the low electrical conductivity of both water and contaminated electrolytes. Therefore, only the presence of detergent is the basis for monitoring and controlling solution concentrations as the electrolyte source. As a result, as the number of uses (times circulated) of detergents increases, the electrical conductivity of the solution will decrease.

CIP Balls and Features

Some of the features of the spray balls and rotary jet heads are listed below:

Spray Balls

- Stationary nozzles that dissipate by spraying.
- It is cheap, simple and effective.
- It has no moving parts and does not require much maintenance.
- Made of AISI 316 stainless steel.
- It is not affected by heat and can clean itself.
- Occlusion of a single hole has no significant effect on cleaning.
- Flow rates are high and pressures are quite low.

Rotary Jet Heads

- They can spray long distances.
- Flow rates are quite high.
- Better cleaning can be achieved with a lower detergent concentration. It has higher striking power.
- Occlusion on sprayer can cause problems.
- Some types are complicated to maintain and clean.
- More expensive than spray balls.
- Some are not very resistant to high temperatures.

Tanks must be equipped with spray heads in order to be included in the CIP system. Depending on the tank size and shape, one or more spray heads are used.

Advantages of CIP System

- It saves on expenses by making the most efficient use of water, chemicals and heat.
- Enterprise runs more efficiently. -Time loss is minimalized.
- Great savings in labor. Because there is no need for disassembly and assembly of tools and devices.
- Provides great comfort and safety for employees. There is no need to enter the tank and contact with detergents and disinfectants.
- Creates a more hygienic workflow. The cleaning program can be maintained and sustained fully and effectively. There is no risk of re-contamination.
- You will save time with easy intervention to the equipment in maintenance processes.

Disadvantages of CIP System

It is not possible to apply to every unit. It is not possible to clean very dense dirt with the CIP system. The initial investment cost is high.

Usage Areas

- Milk and Dairy Products
- Food Facilities
- Industrial Facilities
- Juice Processing Facilities
- Pharmaceutical and Cosmetic Industry
- Chemical Industry
- Water
- Food Processing

Ekin Endüstriyel MIT CIP Systems and New Projects

- Ekin Endüstriyel offers new solutions in thefood industry with MIT CIP systems, it realizes its goals by accomplishing giant projects in Turkey.
- Ekin Endüstriyel presented MIT CIP Systems to the world market.
- Leading domestic manufacturer of heating and cooling industry Ekin Endüstriyel with its MIT brand product group offers hygienic food solutions for pre-/post-production line sanitation and provides on-site sanitation with the MIT CIP unit designed for use in the dairy industry, soft drinks, carbonated drinks, ready-to-eat food industries, and ready-to-eat food industries.

- It has been observed that the main feature of all models developed as a result of R&D investments is the circulation of water and washing chemicals within the system. The fully automatic system has a conductivity meter in order to reduce costs.
- Chemicals are recovered with chemical solution tanks, which are part of the system. CIP systems can be designed with different capacities and features according to the requirement. It can have a capacity between 1,000 l/h and 50,000 l/h, as well as multiple chemical types can be supported, thermal sanitation or chemical disinfection options can be offered.

EKİN ENDÜSTRİYEL

HYGIENIC STORAGE
AND PROCESS TANKS

INDUSTRIAL AND FOOD
GRADE SYSTEMS

What is Stainless Steel?

It is a preferred type of steel because it is resistant to rust. This type of steel contains a certain amount of chromium so that it can be called stainless. The chromium in the steel allows the steel to form a thin film called chromium-oxide when it comes into contact with oxygen. This thin film protects the steel against corrosion, and steel with more than a certain amount of chromium is called stainless steel. In addition, many different elements added to the steel can lead to an increase or decrease in the corrosion resistance of the steel. For example, nickel added to steel, combined with the chromium, makes stainless steel even stronger against corrosion. Likewise, when the element molybdenum is combined with chromium and nickel, the corrosion resistance is further increased. On the other hand, the increase in the ratio of elements such as sulfur and carbon in the steel reduces the corrosion resistance.

What Does Stainless Steel Tanks Do?

Hygiene

Stainless tanks are generally used in the food industry. Stainless tanks; preserve different products, from wines in the fermentation stage to chocolates with a completely different taste, for the benefit to the producer company and ensures that the produce is presented to the consumer in the healthiest and the tastiest way possible.

Corrosion Protection

Stainless steel offers tremendous durability compared to steel, concrete or plastic. This material resists oxidation by water as well as biocides, which is a useful property for a job that handles water or other corrosive substances. Also, no internal or external coating is required for stainless steel water tanks.

Durability and Longevity

Stainless steel tanks offer high resistance to cavitation, crevice corrosion, as well as wear and tear in contaminated and pure water. This material remains ductile over a wide temperature and pressure range. It is heat resistant and unaffected by exposure to harmful radiations. In addition, there is no risk of freezing, rusting or cracking in stainless steel water tanks.

Indispensable to the Industry; Stainless Steel Tanks

The stainless steel tank, which is used with gusto in the production and preservation phase in many sectors. It is used in production variety of products such as honey, jam, milk, chocolate, etc., in the necessary storage stages during the resting period for them to gain their distinguishing taste and preserved until they reach the consumer. As Ekin Endüstriyel, we meet the demands of our customers by meticulously perform our quality workmanship with the aid of our knowledge and experience while producing stainless tanks.

The stainless steel tanks can be produced in different standards and sizes in line with customer requests. We stand by the manufacturer in beer and wine production, fruit juice production, chocolate production, milk and dairy production and we design a durable, long-lasting product with you by considering the solid-liquid materials used during the processes and conditions such as pressure and temperature.

At the same time, stainless steel, chrome mixing tanks, cooled heated tanks, insulated chrome tanks are also produced.

Stainless Mixing Tanks

Stainless mixer tanks are widely used in chemicals, medicine, food, raw materials and many other industries. The mixer and casing of our mixers are made of AISI 303, AISI 304 and AISI 316 stainless steel. Mixers are used in many fields. The main task of the mixers is to create chemical and physical changes.

For this reason, in order to design a mixer, it is necessary to have basic chemical and physical knowledge. Especially in the food, pharmaceutical and chemical industries, new products are being developed every day. For this reason, mixer devices are needed. The design of the tank with mixer is primarily shaped according to the information received in line with the customer's request. According to the physical properties of the substances that make up the mixture; required power requirement, blade and mixer type selection, strength calculations are the basic principles that shape design. Dimensional relations between the tank and the propeller and relatedly calculations of engine power, shaft diameter, propeller operating speed and critical speed are made. Depending on the type of product that will enter the tank, the motor and reducer are selected. If desired, heating and cooling can be done in the mixing tanks. Rollbond resistance heating can be used. Insulation is also applied in the tanks according to the demand. It can be designed as top, bottom or side mounted mixer design. We design and select your reducer by calculating density and volume according to the liquids you mix.

Top Mounted Mixer Tanks

These tanks can be St or Cr-Ni with mechanical or soft seal, house a fast or slow mixer, with or without bottom bearing, under pressure or vacuum with variable or constant pressure; all manufactured and serviced by us according to your needs. These tanks can be internal-external coiled or jacketed.

Bottom Mounted Mixer Tanks and Side Mounted Mixer Tanks

These tanks, which should be soft sealed if they are prone to leakage of liquid required for lubrication and cooling, or mechanically sealed otherwise, these tanks can house fast or slow mixers, under variable or constant pressure or vacuum, casing can be St or Cr-Ni; all manufactured and serviced by us according to your needs.

These tanks can be internal-external coiled or jacketed. You can also add coils for heating or cooling, level indicator, inspection hole, sluice, automatic water supply with float, load cell (weight meter), overflow, etc. to your mixing tanks. Input, output and automation instruments can also be included. At the same time, we offer our mixer variants with and without scrapers on our tanks and upon request.

What is a Reactor Tank?

It is an industrial device that has a fixed or fluidized bed, has continuous or intermittent types, and aids production by allowing a chemical reaction with the help of a catalyst. A reactor can also be defined as a process in which the feed is transformed into the desired product with or without any reaction.

Reactor is the general name of the equipment in which the desired chemical reactions are carried out. It takes various names according to the type of reactions that occur in them. The polymerization reactor is where the polymerization reactions take place, the reactors where nuclear reactions take place are called nuclear reactors and reactors in which hydrogen is added to organic compounds are hydrogenation reactors. Generally, reactors with liquid-solid or liquid-liquid mixtures have a mixer to provide a homogeneous mixture, while reactors with gas phase reactions do not have a mixer. To design a reactor, we need to know the speeds of the physical and chemical processes to be performed, as well as the answers to a number of questions.

What type and size of equipment is needed to carry out a reaction at the desired capacity? What should be the operating conditions, temperatures, pressures, flow rates, what conditions are necessary for the temperature difference with the environment? Is the reaction endothermic or exothermic? The reactor jacket may need to be heated first before the reaction can start and then cooled when the reaction starts. In this case, the reactor jacket must be designed for both heating and cooling. An appropriate design can only be made after these questions have been answered.

In order to decide on the design with the highest return, the cost analysis requires more detailed research such as manufacturing materials suitable for the process conditions, corrosion, usage needs and maintenance needs.

In order to obtain the maximum return, the optimum mode of operation and control policy and control devices (which of the control systems ranging from manual to computerized control will be preferred) must be decided.

What Are Reactor Tanks Produced For?

Chemical reactors tanks or reaction boilers operating under heavy conditions where chemical reactions will take place in paint, food, pharmaceutical, petrochemical and many sectors are specially designed and produced by Ekin Endüstriyel to fully meet the desired capacity, vacuum, pressure and temperature values for customer needs.

We are proud to provide our products to you by considering all the needs of you, our customers, by Ekin Endüstriyel and designing accordingly to your needs. In every project, production can be monitored, controlled and measured at every stage, from raw material entry to the end of the production process and storage of the product. In this way, production costs are reduced and the human factor is kept out of production as much as possible.

Our rectors are designed in accordance with the customer production process, taking into account the materials that will react within.

EKİN ENDÜSTRİYEL

HOMOGENIZERS

INDUSTRIAL AND FOOD
GRADE SYSTEMS

Homogenizers

The process of increasing the stability of the solid, semi-solid or liquid parts in the liquid by separating them into much smaller parts is called homogenization. The machine that performs this process is called homogenizer. Homogenization is applied in many fields such as food-beverage, chemistry-petrochemistry, pharmacy, biotechnology and cosmetics.
It is generally more widely used in the juice and dairy industry. Information about these two processes is below.
Given;

Milk Homogenization Process

The purpose of homogenizing the milk is to distribute the fat particles in the milk evenly and to prevent the milk particles of different densities from settling to the bottom and forming sediment.

Fruit Juice Homogenization Process

It is to prevent the fruit particles from sinking to the bottom and forming a bad image.

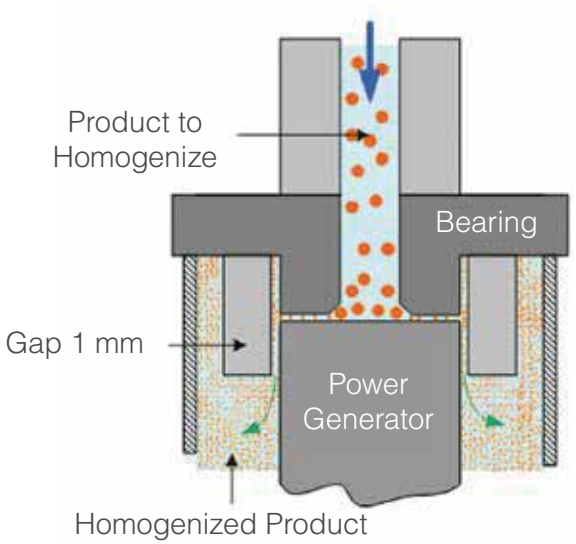

The homogenization process is carried out by means of devices called homogenizers. Dividing the fat globules into diameters smaller than 1 ül occurs when the homogenizer passes through the part known as the homogenization head or homogenization head.

Homogenization Types
1-Full Homogenization
2-Partial Homogenization

Full Homogenization

Whole milk is passed through homogenizer. A good homogenization efficiency is achieved by this method. But the need for time and energy is high.

Partial Homogenization

Milk is separated from the cream, the separated cream is again mixed with skim milk, a mixture containing 12-20% oil is obtained homogenized. Cream is separated from milk by 12-20% fat. First, homogenize (50-700 °C / 150-200 kg/cm^2 under pressure). It is then mixed with skim milk and adjusted to the desired oil ratio according to the product type.

Benefits of the Homogenization Process

The homogenization process is used at 50-70 °C. Homogenization is generally applied for consistency, flavor and quality of the product. In the homogenization process, the chemical properties of the product do not change.

Benefits of MIT Homogenizers

- Longer shelf life
- Excellent appearance and taste
- Standardization
- Provides a partial increase in the viscosity of the product.
- It makes the color of the product appear more vivid.
- The taste of the product increases.

MIT HOMOGENIZER TECHNICAL INFORMATION				
Features	MIT-HJ1T/HJ1C 1.000 lt	MIT-HJ2T/HJ2C 2.000 lt	MIT-HJ3T/HJ3C 3.000 lt	MIT-HJ5T/HJ5C 5.000 lt
Product	Milk	Milk	Milk	Milk
Viscosity	Up to 200 CP	Up to 200 CP	Up to 200 CP	Up to 200 CP
Max. Particle Size	Up to 500 microns	Up to 500 microns	Up to 500 microns	Up to 500 microns
Operating Temperature	90 °C	90 °C	90 °C	90 °C
Capacity	1.000 lt/h	2.000 lt/h	3.000 lt/h	5.000 lt/h
Homogenization Stage	Single or double level	Single or double level	Single or double level	Single or double level
Max. Working Pressure	250 bar	250 bar	250 bar	250 bar
Maks. Counter Pressure	10 bar	10 bar	10 bar	10 bar
Min. Prod. Feed. Pressure	2 bar	2 bar	2 bar	2 bar
Stroke Number	330 pcs/min.	330 pcs/min.	330 pcs/min.	750 pcs/min.
Motor Power	11 kW	15 kW	22 kW	37 kW
Motor Brand	GAMAK	GAMAK	GAMAK	GAMAK
Electric Consumption	11 kW	15 kW	22 kW	37 kW
Electric Supply	3 hp/ 380V /50 Hz	3 hp/ 380V /50 Hz	3 hp/ 380V /50 Hz	3 hp/ 380V /50 Hz
Auxilary Circuit	220V DC	220V DC	220V DC	220V DC
Sheet Metal Thickness	1,5 mm	1,5 mm	1,5 mm	1,5 mm
Outlet Diameter of Valve	DN 40	DN 40	DN 40	DN 40
Dimensions	800x1000x1100 mm	1300x1100x1170 mm	1300x1100x1170 mm	1430x1190x1370 mm
Leg Size	5-16 cm adjustable legs	5-16 cm adjustable legs	5-16 cm adjustable legs	5-16 cm adjustable legs
Weight	650 kg	750 kg	850 kg	1400 kg

EKİN ENDÜSTRİYEL

TURN-KEY
PROJECTS

INDUSTRIAL AND FOOD
GRADE SYSTEMS

Facility Establishment Services (Turnkey Solutions)

We can manage all process processes from A to Z by designing special facilities according to the wishes, needs and conditions of our customers.

Ekin Endüstriyel is an international expert on all mechanical equipment and control systems of plants. We build facilities that are specially designed according to the wishes, needs and conditions of the customers. We cooperate with different equipment manufacturers in the projects we undertake and work together to provide all kinds of services in the complete establishment of the facilities.

The main areas of expertise of the firm are:

- Industrial Facilities
- Chemistry
- Food Processing

Efficient Plant Setup

We carry out turnkey projects by designing efficient and sustainable facilities with advanced engineering services, feasibility studies, appropriate technical and financial solutions.

We assist in realizing your projects with quality and safety by our expertise in:

- Engineering
- Supply
- Assembly
- Production
- Project management know-how

We establish the efficient, modern and high-tech facilities that your project needs. What we can offer you?

- Advanced engineering services
- Feasibility studies
- Appropriate technical solutions
- With financial solutions,

We continue to carry out projects that provide high performance with our experienced staff in machine disassembly and assembly operations, new machine and line installations at your facilities.

- Determination of the physical condition of the machines in existing facilities
- Determination of the transportation route and making the necessary arrangements
- Proper handling, and logistic equipment assessment
- Taking occupational safety measures
- Assessing of the physical conditions of new locations
- Determining a transport order based on the layout
- Delivery in working condition at new location

Our teams continue to contribute to the process with great effort and devotion to increase efficiency in production by providing all support until the start-up process of the project and all performance test results. In case of a malfunction during the transportation of machinery and facilities (disassembly-assembly) by our team even if the malfunction is apparent after the line starts production, our installer team provides uninterrupted support for the elimination of the problem.

Transportation, Assembly and Disassembly of Machinery and Facilities

- Complete Disassembly (Disassembly of Machinery and Facilities)
- Packing of Machines
- Transfer to the Designated Place
- Unloading of Machines
- Installation
- Renovation in case of demand and need
- Making it available

Transportation, Assembly and Disassembly of Machinery and Facilities

Ekin Endüstriyel offers professional solutions for all kinds of needs, with a service that includes all locations, whether inside the facility or between buildings, between cities and internationally. Ekin Endüstriyel continues to carry out projects that provide high performance with our experienced staff in machine disassembly and assembly operations, new machine and line installations at your facilities. The pre-planning made in concert with our customers for the transportation or installation processes and the project management schedules has become the main pillar of mutual agreement. We are proud to offer our customers our quality services where our dedication is at the forefront.

Our teams schedule programs suitable for the actions that needs to be taken in the field. The markings used during the disassembly and packaging processes play an important role in preventing possible confusion. During the dismantling of the machines, there may be oil or water residues inside the machines and these residues can leak into the machines. To prevent such situations, after disassembly, the exposed pipe outlets are covered with nylon bags. Depending on the area where the project is at the equipment and machines are brought to the area with the right equipment and according to the machine installation program prepared by our engineers and supervisors. While the installation of the line continues, we make periodic checks throughout the line in order to speed up the process and minimize the error rate.

In addition to industrial plant installation, production line installation, our company has factory installation, factory commissioning, production line revision, machinery maintenance, disassembly, assembly and machinery revision, investment incentives consultancy services, and has mechanical, electrical and automation technical teams and references built

Concept Determination

“The Right Project in the Right Place” The most important determinant in the sector for success is that the projects production and the service it provides matches the needs of the location as closely as possible.
At this stage, the content and style of your facility is determined in accordance with your target customer demographic. For example, it can be a fitness or spa center, or a wellness center with both.

Architectural Project Drawing And Its Application

Architectural drawing stage has been reached in the determined concept. At this stage, the size of your facility is determined and the most effective layout plan is drawn. In this layout and concept, the architectural project is drawn and submitted for your approval. In addition, the entire mechanical needs of the facility (air conditioning, lighting, installation) is prepared. With this final state, the application is carried out.

Supplying Equipment
“As Much As You Need, No Less, No More” A significant part of your budget is determined by your equipment needs. Here, it is very important to choose the right equipment in terms of quality and quantity. A list of all equipment you need is prepared and procured from a range of alternative providers at the most affordable price. All process design, equipment selection and installation can be done in line with customer requests.
The turnkey facility, with its variable capacity and other product-specific options, consists of milk receiving, raw milk storage, pasteurizer, pasteurized milk storage, sterilizer (UHT), aseptic storage and CIP unit with a SCADA where the entire facility can be monitored.

- Facility Installation and Consulting Services.
- Engineering Services.
- Facility Installation and Consulting Services.
- Transferring New Technologies and Applications in Related Processes.
- Accompanying the Production while the Process is Commissioned.
- Helping to Solve Problems Encountered During Production and Training on Required Information.

EKİN ENDÜSTRİYEL

LOBE PUMPS

FLUID TRANSFER PRODUCTS

MIT Lobe Pumps

MIT lobe pumps are valve-free and positive-displacement pumps. Each MIT pump is a special solution. Lobe pumps are fully designed to meet the requirements of applications.

Working Principle of MIT Lobe Pumps

As the rotor rotates, the volume in the pump inlet line increases and the fluid is dragged into the pump. The fluid remaining between the rotors and the pump inner wall is transported to the pump outlet. These pumps are mainly composed of three or two lobe rotors which rotate from each other within the body. The rotation of the rotor pair can be defined by the direction of rotation of the drive, which creates a vacuum on the suction side of the pump. This vacuum draws fluid into the pump body. When the rotor is rotated, it is transferred to the fluid outlet line as a result of the volume decrease at the outlet.

MIT Lobe Pumps Features

- Thanks to its positive displacement feature, it is used without problems in transferring low, medium and high viscosity fluids.
- No problem can be used when transferring products at temperatures in the range of O-150 °C.
- Easy installation and maintenance.
- Easy transport of adhesive, abrasive or surface-sensitive fluids.
- 4 different rotors available, 2 lobe rotors, 3 lobe rotors, butterfly rotors and single butterfly rotor-shaped.
- Two lobe options for products containing solid particles (like jam, molasses).
- Mechanical seal with double (wash) cartridge, mechanical seal, gaskets (for applications such as glucose, jam).
- Standard input / output as standard pump can easily convert from top to bottom input / bottom outlet.
- Rotation in both directions (counterclockwise and clockwise).
- The gearbox is made of cast iron with a protective coating coated with epoxy paint.
- All bar, rotor and pump body are made of AISI 316 stainless steel.
- As the material quality of the surfaces in contact with the fluid is AISI 316 stainless steel, they are used in applications requiring hygiene.
- Clamp, food fitting and flange connection options are available.

Advantages Of MIT Lobe Pumps

- Easily transfer medium size solids.
- There is no friction between the surface materials during the fluid transfer.
- The pump can be cleaned while it is connected to the service line.
- Quiet operation.
- In pumps with optional heating jackets, the flow of fluid through the material is prevented from freezing and provides an easy flow. It transfers smoothly without disturbing the product to be transferred.
- Optionally, it can be used in different application areas by making dashboard application on portable wheeled chassis. The only thing to do is to connect the power line to the board on the chassis.
- Taking the energy from the vehicle without taking up space on land vehicles, it provides convenience especially in the unloading and filling operations of food tankers.
- It carries out the transfer of high viscosity products without any problems.

Information on Lobe Pump Selection

The specifications of the product to be transferred and the line to be transferred to the lobe are the desired technical details. The desired values are shown in the table below in detail.

Desired Details	Sample Information
Type of Fluid	Chocolate, honey, buttermilk etc.
Flow Rate of Fluid	m^3/H, L/H, TON/H etc.
Pressure of Fluid	Bar, mSS vb.
Viscosity of Fluid	cP, cSt vb.
Temperature of Fluid	°C
Density of Fluid	g/cm^3

Heating jacket, which is designed to prevent the product from freezing in the pump, is applied on the pump according to the demands.

Motor-Free Pump Dimension Table

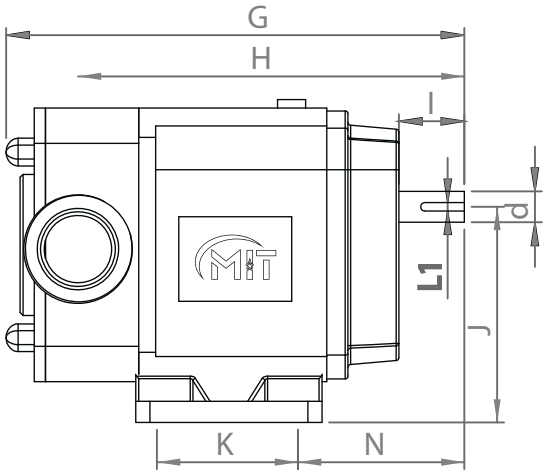

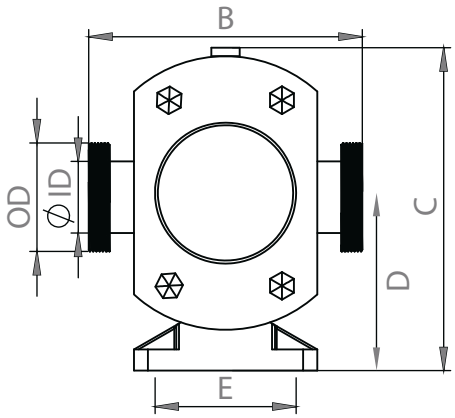

Model	B	C	D	E	K	G	H	I	J	L1	OD	ID	d
MLP 20	182	229	123	100	100	311	260	46.5	153	6	52	25	22
MLP-23	191	229	123	100	100	315.5	264.5	46.5	153	6	64.5	35	22
MLP-25	194	229	123	100	100	325	274	46.5	153	6	77	47.8	22
MLP-30	225	271	149	125	125	432.5	357	56	186.5	8	77.5	47.8	28
MLP-36	260.5	271	149	125	125	438.5	363	56	186.5	8	77.5	59.5	28
MLP-55	240	271	149	125	125	443.5	368	56	186.5	8	77.5	66	28
MLP-60	245	271	149	125	125	447.5	372	56	186.5	8	109	72.2	28

Motor-Reducer Dimension Table

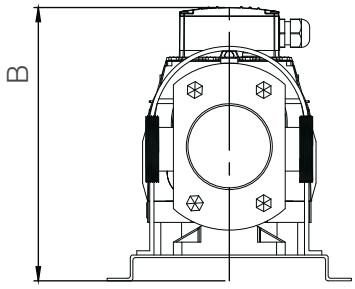

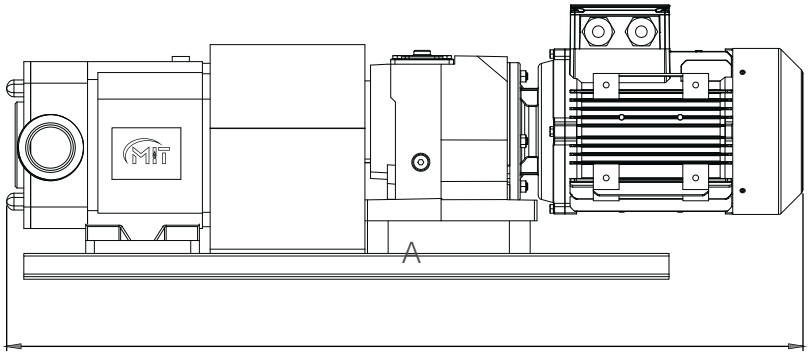

Motor Series	A	B
002	715	285
003	715	285
102	745	285
172	865	325
202	910	320
272	915	320
282	930	320

Motor Series	MLP-20	
	A	B
002	715	285
003	715	285
282	930	320

Models And Capacities

Model	Flow (m^2/h)	Pressure (bar)	Motor Power (kW)	Recommended Cycle (min-1)	Flow in Each Cycle (L/rev)	Input-Output Connection Dimensions
MLP-20	1-2	20	3,0	100-450	0,15	1"-DN25 DIN, SMS, DF, RJT
	1-3	15	2,2			
	1-3	12	1,5			
	1-3	9	1,1			
	1-3	5	0,75			
MLP-23	2-5	20	4,0	100-450	0,212	1,5"-DN40 DIN, SMS, DF, RJT
	2-5	15	3,0			
	2-5	12	2,2			
	2-5	9	1,5			
	2-5	5	1,1			
MLP-25	3-7	15	5,5	100-450	0,298	2"-DN50 DIN, SMS, DF, RJT
	3-7	10	4,0			
	3-7	7	3,0			
	3-7	4	2,2			
MLP-30	5-10	20	7,5	100-400	0,496	2"-DN50 DIN, SMS, DF, RJT
	5-10	12	5,5			
	5-10	8	4,0			
	5-10	4	3,0			
MLP-36	6,5-13	18	7,5	100-400	0,631	2,5"-DN65 & 2" -DN50 DIN, SMS, DF, RJT
	6,5-13	10	5,5			
	6,5-13	7	4,0			
	6,5-13	3	3,0			
MLP-55	7-14	12	7,5	100-400	0,705	2,5"-DN65 DIN, SMS, DF, RJT
	7-14	9	5,5			
	7-14	6	4,0			
	7-14	3	3,0			
MLP-60	8-16	10	7,5	100-400	0,778	3"-DN80 DIN, SMS, DF, RJT
	8-16	9	5,5			
	8-16	5	4,0			
	8-16	3	3,0			
MLP-70	15-31	18	15	100-360	1,791	3"-DN80 DIN, SMS, DF, RJT
	15-31	12	11			
	15-31	9	7,5			
	15-31	5	5,5			
MLP-80	20-40	15	15	100-360	1,824	3"-DN80 DIN, SMS, DF, RJT
	20-40	10	11			
	20-40	7	7,5			
	20-40	4	5,5			
MLP-100	25-50	10	11	100-360	2,299	4"-DN100 DIN, SMS, DF, RJT
	25-50	6	7,5			
	25-50	3	5,5			
MLP-125	31-62	10	15	100-360	2,922	5"-DN125 DIN, SMS, DF, RJT
	31-62	7	11			
	31-62	4	7,5			

Information on Working Principle

As the rotor rotates, the volume in the pump inlet line increases and the fluid is dragged into the pump. Fluid between the rotors and the pump inner wall is transported to the pump outlet.

MIT lobe pumps are designed to provide reliable performance, trouble-free operation and superior energy efficiency for demanding applications. These hygienic pumps meet the high standards of low damage to the product and low pressures.

Maintenance and Repair

Thanks to its compact structure, MIT lobe pumps can be operated in the field and in a very short time and easily.

Before the pump is serviced, the electrical connections must be disconnected from the pump motor.

After this operation, the pump can be serviced and repaired.

- The maintenance and replacement of the lobes can be made with the pump and line connections and the dismantling of the front cover bolts without dismantling the coupling connections between the motor and the pump.
- In this section, the lobes can be easily removed and cleaned and maintained.
- The front body must be removed for replacement of the packing. The dismantling process of the body can be done in a simple way.
- The oil reservoir in the gear unit is replaced by opening the oil drain plug periodically. This will increase the life of the gears.
- After necessary cleaning, all parts are removed and reassembled. When switching on the pump, electrical connections must be made according to the direction of rotation of the motor.

EKİN ENDÜSTRİYEL

HYGIENIC CENTRIFUGAL **PUMPS**

FLUID TRANSFER PRODUCTS

MIT Hygienic Centrifugal Pumps

MIT hygienic centrifugal pumps have all the features necessary for the transfer of all liquids in milk, fruit juices, alcoholic and non-alcoholic beverages, beer, pharmaceuticals and chemical industry. Made of AISI 304 or AISI 316L quality stainless steel. Thanks to its high wall thickness, it has a long service life against corrosion wear.

Thanks to the special design of the lid and fan, friction is reduced and non-hygiene blind spots are eliminated. The convenience of the special structure of the fluid in the pump speed can reach the highest level. In addition, it allows easy control and cleaning applications in a short time with its easy disassembly feature.

Pump Technical Specifications

Max. Flow: 150 m^3/h
Max. Discharge Head: 70 m
Max. Operating Temperature: 120 °C
(30 mins. in CIP/SIP applications)
Max. Cycle: 3600 Rpm./Min.

Pump Material Features

Pump Body and Fan: AISI 316L / AISI 304
Gasket: EPDM (conformity to food - FDA)
Leak-proofing: Meachanical Seal

Model	Capacity		Motor Power (kW)	Input-Output Connection Dimensions
	m³/h	Meter		
MP-03	1	14	0,55	1"/1" DN25 / DN25
	2	10	0,55	
MP-05	3	16	0,75	1,5"/1,5" DN40 / DN40
	4	13	0,75	
	5	10	1,1	
MP-10	3	26	1,5	2"/1,5" DN50 / DN40
	5	24	1,5	
	6	20	1,5	
	7	17	1,5	
MP-15	10	25	2,2	2"/2" DN50 / DN50
	15	22	2,2	
	18	18	2,2	
MP-20-1	10	30	3,0	2"/2" DN50 / DN50
	15	24	3,0	
	20	24	4,0	
	30	18	4,0	
MP-20-2	10	40	5,5	2"/2" DN50 / DN50
	20	38	5,5	
	25	35	5,5	
MP-30	20	40	7,5	2,5"/2" DN65 / DN50
	25	38	7,5	
	30	36	7,5	
MP-35-1	30	60	15	2,5"/2,5" DN65 / DN65
	35	55	15	
	40	50	15	
	45	45	15	
MP-35-2	20	70	15	2,5"/2,5" DN65 / DN65
	25	70	15	
	30	70	15	
	35	65	15	
	40	65	15	
	45	60	18,5	
	50	55	18,5	
MP-40-1	45	42	11	3"/2,5" DN80 / DN65
	50	42	11	
	60	40	15	
	65	40	15	
	70	38	15	
	80	35	15	
	90	33	15	
	100	30	18,5	
	110	28	18,5	
MP-40-2	50	50	15	3"/2,5" DN80 / DN65
	60	48	15	
	70	47	18,5	
	80	46	18,5	
	85	45	22	
	90	44	22	
	100	43	22	
	110	40	22	
	120	35	22	
	130	30	30	
	140	20	30	

Performance Curves

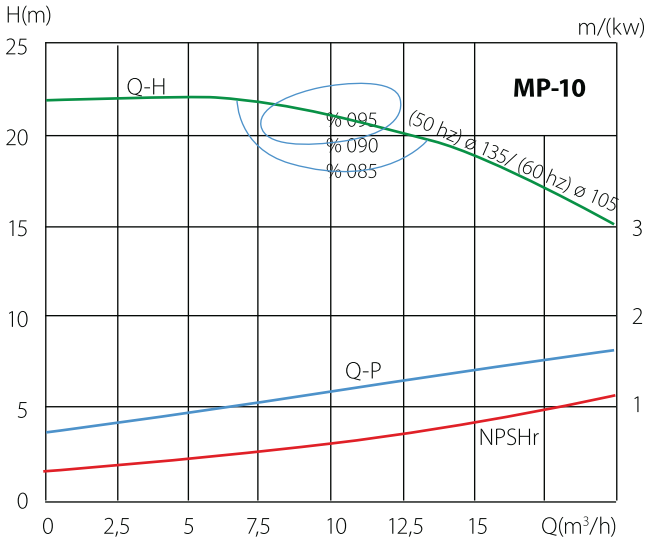

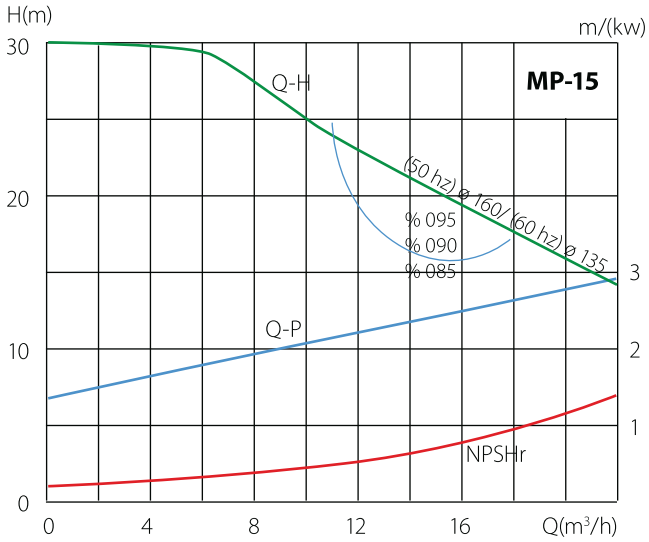

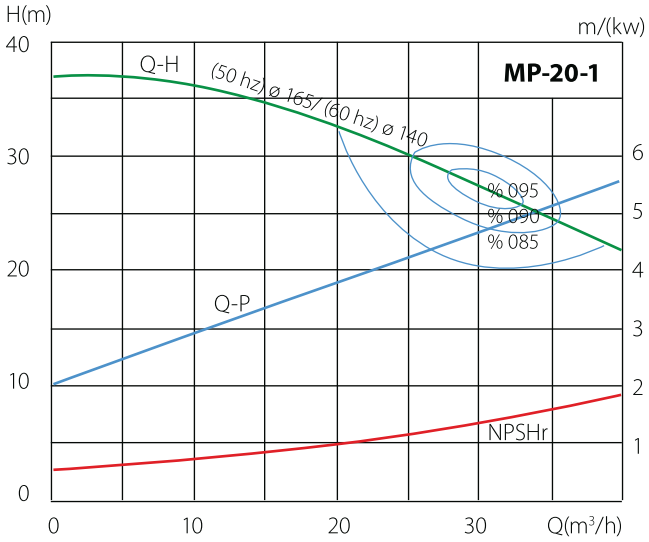

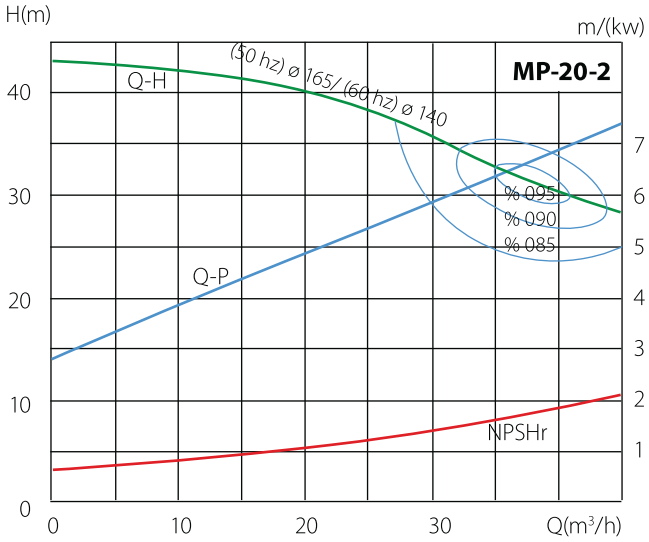

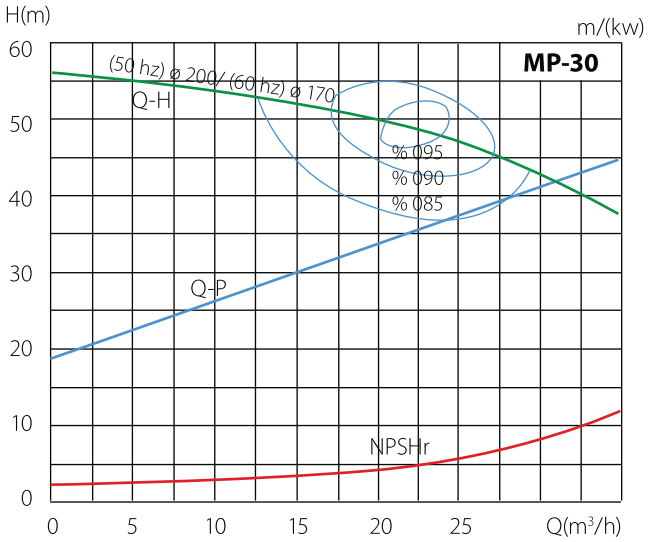

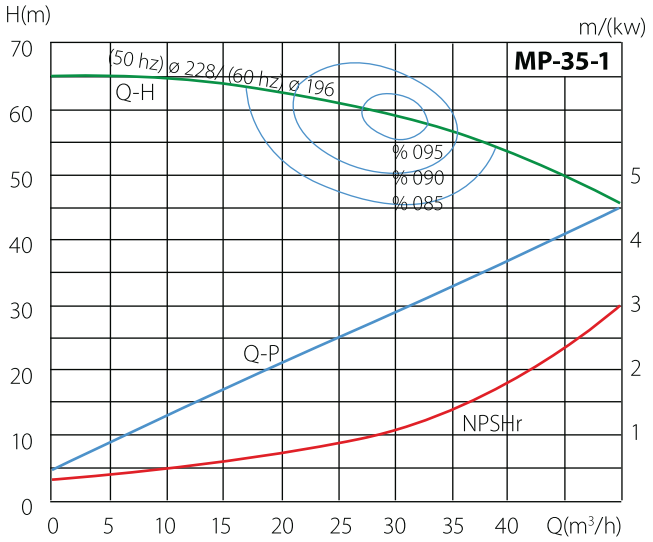
MP-35-1
H(m)
m/(kw)
(50 hz) ø 228/ (60 hz) ø 196
Q-H
% 095
% 090
% 085
Q-P
NPSHr
Q(m³/h)

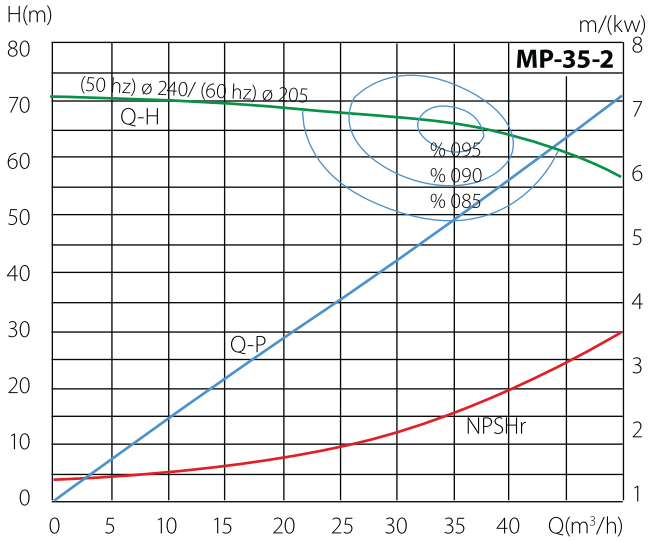
MP-35-2
H(m)
m/(kw)
(50 hz) ø 240/ (60 hz) ø 205
Q-H
% 095
% 090
% 085
Q-P
NPSHr
Q(m³/h)

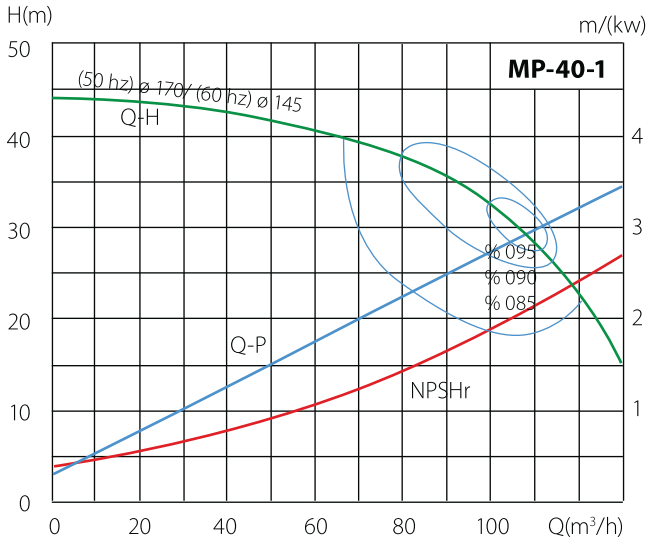
MP-40-1
H(m)
m/(kw)
(50 hz) ø 170/ (60 hz) ø 145
Q-H
% 095
% 090
% 085
Q-P
NPSHr
Q(m³/h)

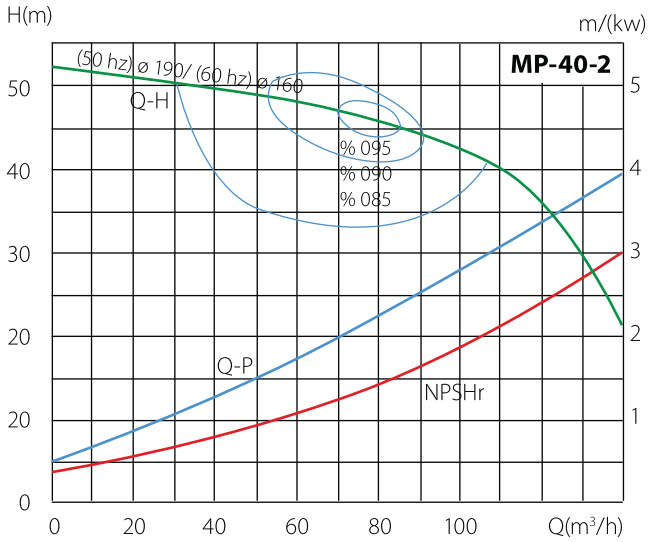
MP-40-2
H(m)
m/(kw)
(50 hz) ø 190/ (60 hz) ø 160
Q-H
% 095
% 090
% 085
Q-P
NPSHr
Q(m³/h)

EKİN ENDÜSTRİYEL

TWIN SCREW
HYGIENIC PUMPS

FLUID TRANSFER PRODUCTS

Twin Screw Pump

Flexible solution tor two-direction reversible, high pressure, high viscosity, large particle, pulse free, liquid delivery.

Twin-screw pump has strong self-priming ability, can transport solid particles. gas-liquid mixture, high viscosity. low viscosity and other materials. The pump not only can extract and convey materials, but also apply tor CIP and SIP systems, can reduce pipeline, valve and CIP exclusive pumps, which improve efficiency and save cost. it has extra characteristics, that other volume pumps do not have. such as no pulse phenomenon, no particlo damago, high pressure, wide speed range, large flow range and so on.

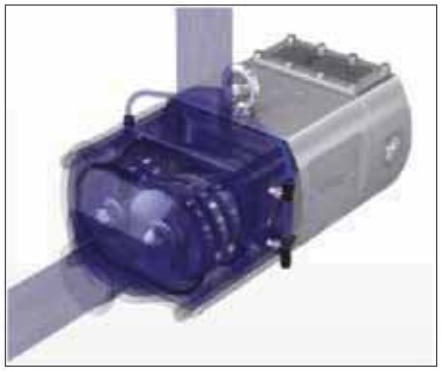

Technical Specifications	
Max Fow	110 m^3/h
Max Particles	23mm
Max Pressure	20bar
Speed Range	10-3500 R.P. M.
Working Temperature	-40 °C and 15 °C
Suiface Lreatmerıt	Ra≤0.6 μ m; Ra≤0.4 μ m
Material	%100 SS316L Stainless Steel

After used screw pump, other auxiliary pumps and valves and controllers can be reduced as more as possible.

Other solutions CIP cleaning and media delivery configuration

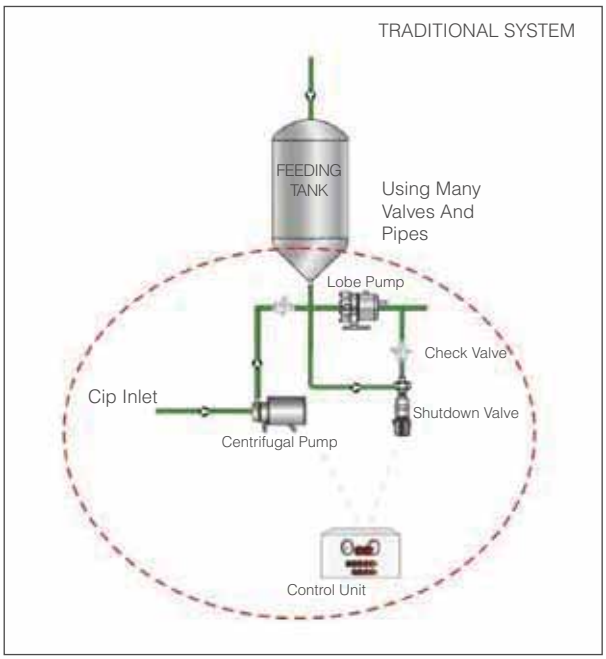

Screw pump solutions CIP cleaning and media delivery configuration

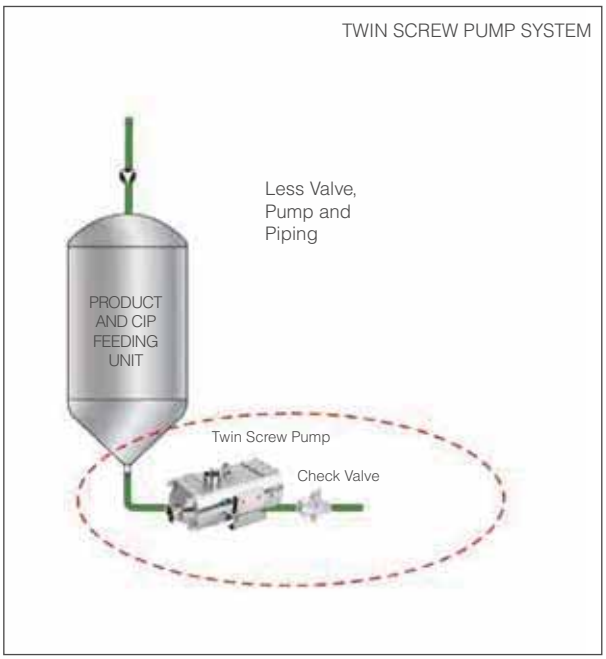

With its strong self-priming capacity, the TS series screw pumps have the ability to deliver high viscosity and low viscosity medium , as well as CIP liquid extraction and cleaning functions. Choosing TS series screw pump will help you to reduce using CIP dedicatcd pump and valve control system. It will save cost.

Choose the right screw spacing for your process.

Option 1: Large screw spacing, larger flow rate. Can deliver larger particles, but the pressure will be lower compared with small spacing screw.
Option 2: Small screw spacing, lower flow rate but higher pressure, the particles that can be transported will also be smaller.

Small spacing screw

Higher pressure. Lower flow rate, smaller particles.

Middle spacing screw

Middle pressure. Middle flow. Middle particles

Large spacing screw

Lower pressure. larger flow rate. larger particles

Usage Areas

Model	Screw Spacing (mm)	Flow Per Rotation (l/r)	Max. Flow (l/m)	Max. Flow (m^3/h)	(Rpm) Max Speed (min)	Max. Solid (mm)	Max. Pressure (bar)	Pump Head Port	Body Port	Net Weight (kg)
TS_R/L-A11/18	18	0.09	324	19.4	3600	8.5	20	1.5"-2"	1"-1.5"	29.9
TS_R/L-A21/26	26	0.13	468	28.1	3600	12.5	20			
TS_R/L-B13/26	26	0.20	580	34.8	2900	12.5	20	2.5"-3"	2"-3"	58.7
TS_R/L-B23/36	36	0.29	841	50.5	2900	17.5	20			
TS_R/L-C17/32	32	0.53	1537	92.2	2900	15.5	20	3"-4"	3"-4"	154.7
TS_R/L-C27/48	48	0.79	2291	137.5	2900	23.5	20			

Pump Graph

TSR/L(Q-R/Graph)

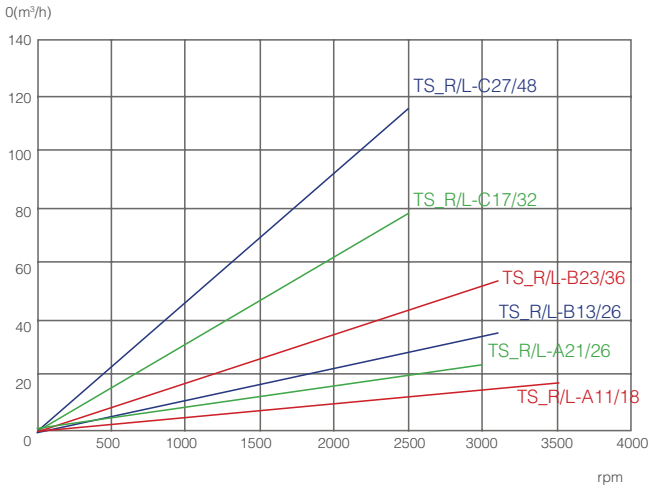

TSR/L(Q-R/Graph)

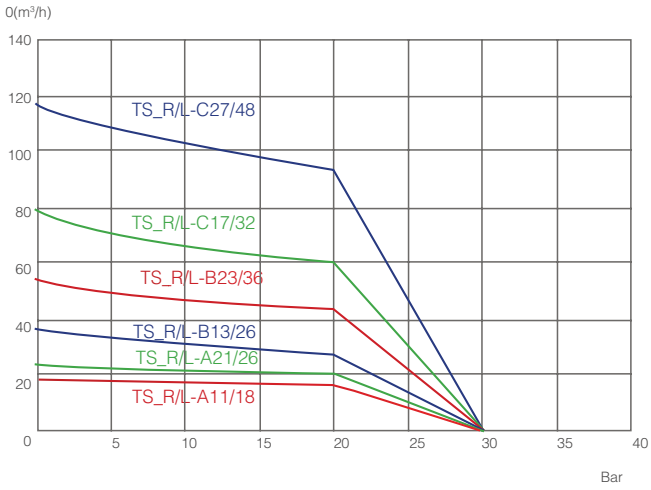

Usage Areas

Food and Beverage

Soup, stew, ketchup, vegetables, condiments, chocolate, fat and oil, cream filling, breweries, wort, brewery, wort, soft drink/fruit juice, moat processing.

Dairy

Cream, milk, choese curd and whey, cottage cheese, yogurt.

Medicine/Cosmetic

Ointment, syrup, extractive, serum, face creams & emulsion, hair styling gels & liquids, dyes and alcohols, soap, cosmetics.

Chemical/industrial

Solvents, paints, fuels, resins, polymers&sludges, oil & lubricants.

Different Assembly Types For Twin Screw Hygienic Pumps

TS-R

With this connection type, TSR Twin Screw Hygienic Pumps Can Work As Front İnput-Top Output Or Vice Versa.

TSL

With this connection type, TSL Twin Screw Hygienic Pumps can work as front input-top output or vice versa.

Heating Jacket

By making a heating jacket on the Twin Screw Hygienic Pumps body, the transfer of products that do not want to freeze is easily ensured.

Motor Direct-Connected Screw Pump Selection Table

Model	Screv Spacing (mm)	Pressure (Bar)	Motor (kW)	Max. Solid (mm)	Flow Per Rotation (l/r)	Suggested Speed Range (r/min.)	Suggested Flow Range (m^3/h)		Pump Head Inlet	Pump Body Outlet	Net Weight (kg)
TS_R/L-A11/18	18	4	2.2	8.5	0.09	100-1450	0.54	7.8	1.5"-2"	1"-1.5"	80.9
		7	3								84.9
		10	4								90.9
		14	5.5								123.9
		18	7.5								134.9
TS_R/L-A21/26	26	3	2.2	12.5	0.13	100-1450	0.78	11.3	1.5"-2"	1.5"- 2'	80.9
		5	3								84.9
		8	4								90.9
		11	5.5								123.9
		15	7.5								134.9
TS_R/L-B13/26	26	4	4	12.5	0.20	100-1450	1.2	17.4	2.5"-3"	2"-3"	152.7
		8	5.5								163.7
		12	7.5								218.7
		18	11								233.7
TS_R/L-B23/36	36	3	4	17.5	0.29	100-1450	1.74	25.2	2.5"-3"	2.5"-3"	152.7
		7	5.5								163.7
		10	7.5								218.7
		15	11								233.7
TS_R/L-C17/32	32	4	7.5	15.5	0.53	100-1000	3.18	31.8	3"-4"	3"-4"	314.7
		8	11								329.7
		12	15								374.7
		18	18.5								387.7
TS_R/L-C27/48	48	4	7.5	23.5	0.79	100-1000	4.74	47.4	3"-4"	3"-4"	314.7
		7	11								329.7
		10	15								374.7
		15	18.5								387.7

Motor-Reducer Connected Pump Selection Table

Model	Screv Spacing (mm)	Pressure (Bar)	Motor (kW)	Max. Solid (mm)	Flow Per Rotation (l/r)	Suggested Speed Range (r/min.)	Suggested Flow Range (m^3/h)		Pump Head Inlet	Pump Body Outlet	Net Weight (kg)
TS_R/L-A11/18	18	5	1.1	8.5	0.09	100-1000	0.54	5.4	1.5"-2"	1"-1.5"	76.9
		10	1.5								85.9
		14	2.2								93.9
		18	3								101.9
		20	4								114.9
TS_R/L-A21/26	26	4	1.1	12.5	0.13	100-1000	0.78	7.8	1.5"-2"	1.5"- 2'	76.9
		8	1.5								85.9
		12	2.2								93.9
		16	3								101.9
		18	4								114.9
TS_R/L-B13/26	26	5	3	12.5	0.20	100-1000	1.2	12.0	2.5"-3"	2"-3"	130.7
		10	4								143.7
		15	5.5								201.7
		20	7.5								214.7
TS_R/L-B23/36	36	4	3	17.5	0.29	100-1000	1.74	17.4	2.5"-3"	2.5"-3"	130.7
		8	4								143.7
		12	5.5								201.7
		16	7.5								214.7
TS_R/L-C17/32	32	5	5.5	15.5	0.53	100-1000	3.18	31.8	3"-4"	3"-4"	297.7
		10	7.5								310.7
		15	11								441.7
		20	15								460.7
TS_R/L-C27/48	48	4	5.5	23.5	0.79	100-1000	4.74	47.4	3"-4"	3"-4"	297.7
		8	7.5								310.7
		12	11								441.7
		16	15								460.7

Product Features and Advantages

- With CIP extraction and delivery capacity; pump body and pump cover can discharge liquid completely.
- Single and double mechanical seal options
- All models have seal flush ports lor optional double.
- All stainless stecl design, including gearbox.

Simple Installation and Disassembly

- The screw and shaft are connected by spline. It's simple and convenient for installation and disassembly.
- Rotate clockwise and counterclockwise without changing configuration.
- The pump can be used for various viscosities without changing configurations, etc.

Features

- Pressure up to 20 bar.
- Special screw lock nut designed to extend service life.
- There are no bearings and screws at the area contacting with medium.
- Large diameter 17-4PH shaft lor higher strength and stittness. Helping to reduce vibration and extend seal life.
- High precision heavy duty needle roller bearings .
- Oil-lubricated bearings can be forward lubrication over the entıre speed. Temperature and pressure range.

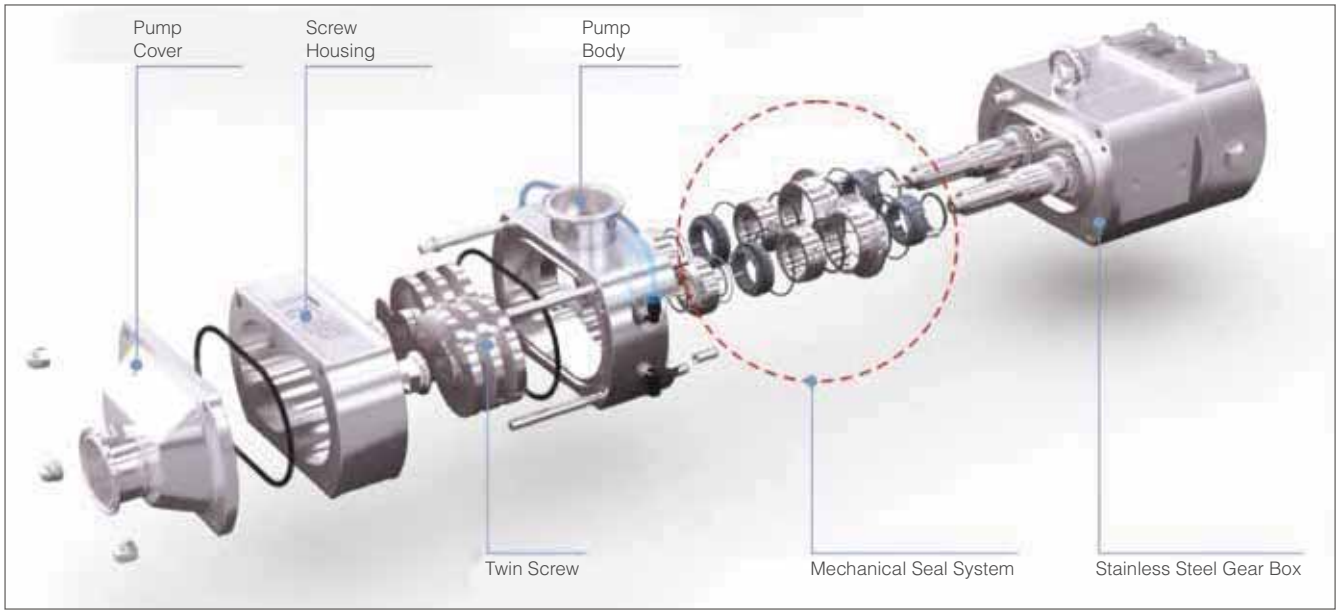

Twin Screw Pump Mechanical Seal Design

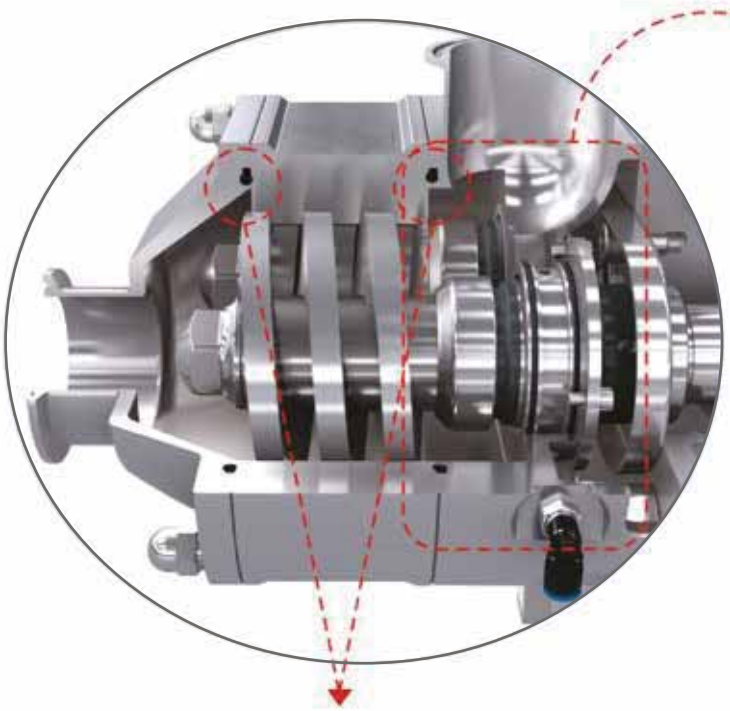

Single Mechanical Seal

Double Mechanical Seal

Mechanical Seal Configuration

1	SIC/C/EPDM	4	SIC/S IC/EPDM	7	TC/TC/EPDM
2	SIC/C/FKM	5	SIC/SIC/FKM	8	TC/TC/FKM
3	SIC/C/HNBR	6	SIC/SIC/HNBR	9	TC/TC/HNBR

Power (kW)	Voltage	Power (kW)	Voltage
0.55kW	210V-230V/50HZ 360V-400V/50HZ 420V-460V/50HZ	4.0-5.5kv	360V-400V/50HZ 630V-690V/50HZ 420V-460V/60HZ
0.75kW		7.5-11kv	
1.1-1.5kW		15-18.5kv	
2.2-3.0kW		22-30kv	

Pump Inlet/Outlet Connection Standard

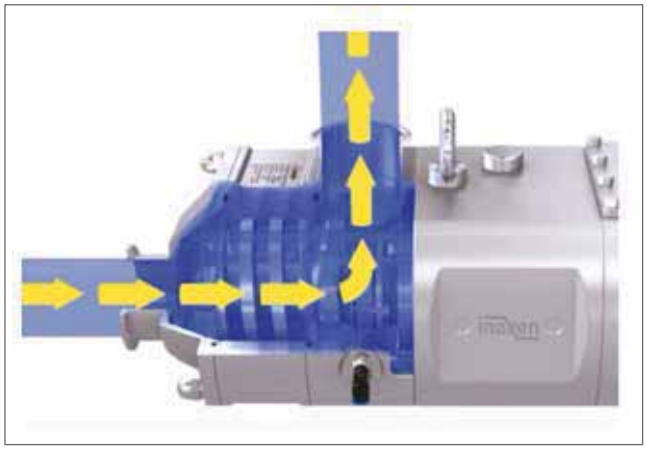

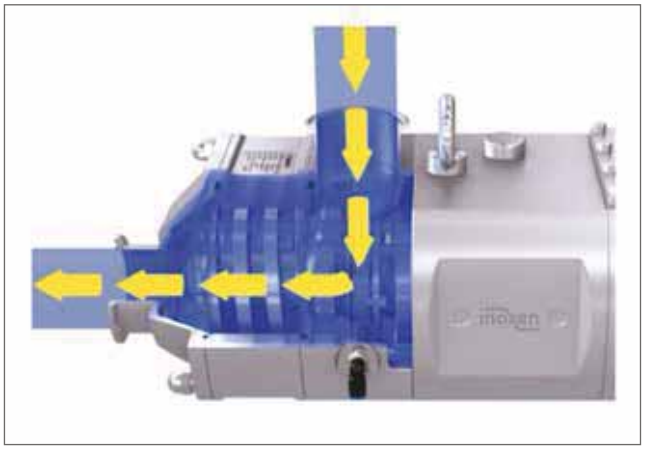

When clockwise rotation, pump cover is inlet and pump body is outlet.

When rotating counterclockwise, pump cover is outlet and pump body is inlet.

Clamp

Threaded

Aseptic Flange

Union

Flange Hopper

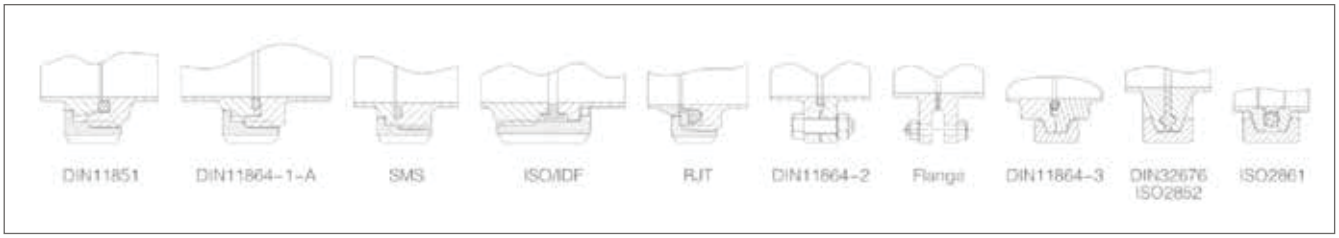

Twin Screw Pump Data Chart

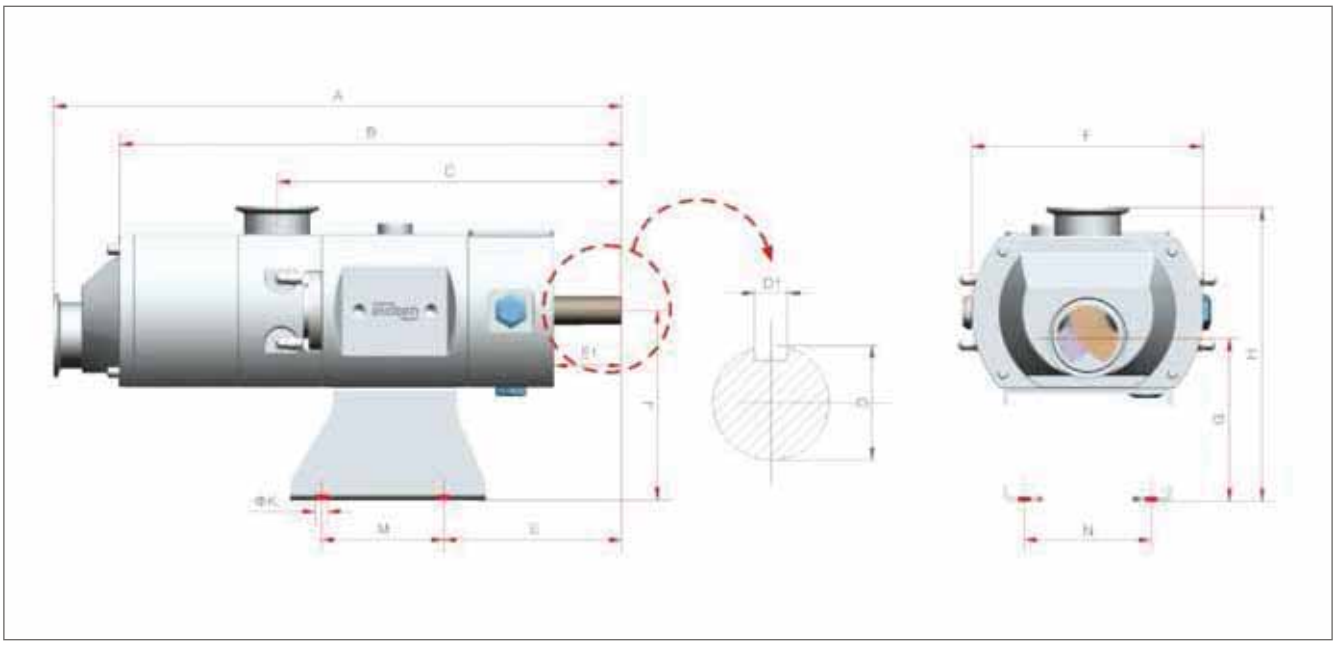

Model	Cover Port	Body Port	Assembly Dimension											
	Inlet	Outlet	B	C	D	D1	E	E1	F	G	J	K	M	N
TS_R/L-A11/18	1.5"-2"	1"-1.5"	385	25	22	6	122	52	178	127	145	12	115.5	95
TS_R/L-A21/26	1.5"-2"	1"-1.5"	385	265	22	6	122	52	178	127	145	12	115.5	95
TS_R/L-B13/26	2.5"-3"	2"-3"	520	354	28	8	181	57.5	225	162	180	12	190	125
TS_R/L-B23/36	2.5"-3"	2"-3"	520	354	28	8	181	57.5	225	162	180	12	190	125
TS_R/L-C17/32	3"-4"	3"-4"	634	411	42	8	196	73	322	206	240	18	300	194
TS_R/L-C27/48	3"-4"	3"-4"	634	411	42	8	196	73	322	206	240	18	300	194

Model	Clamp		Union		Flange	
	A	H	A	H	A	H
TS_R/L-A11/18	436	225	445	234	447	231
TS_R/L-A21/26	436	225	445	234	447	231
TS_R/L-B13/26	589	280	601	296	595	289
TS_R/L-B23/36	589	280	601	296	595	289
TS_R/L-C17/32	720	376	727	383	730	386
TS_R/L-C27/48	720	376	727	382	730	386

Twin Screw Pump Data Chart

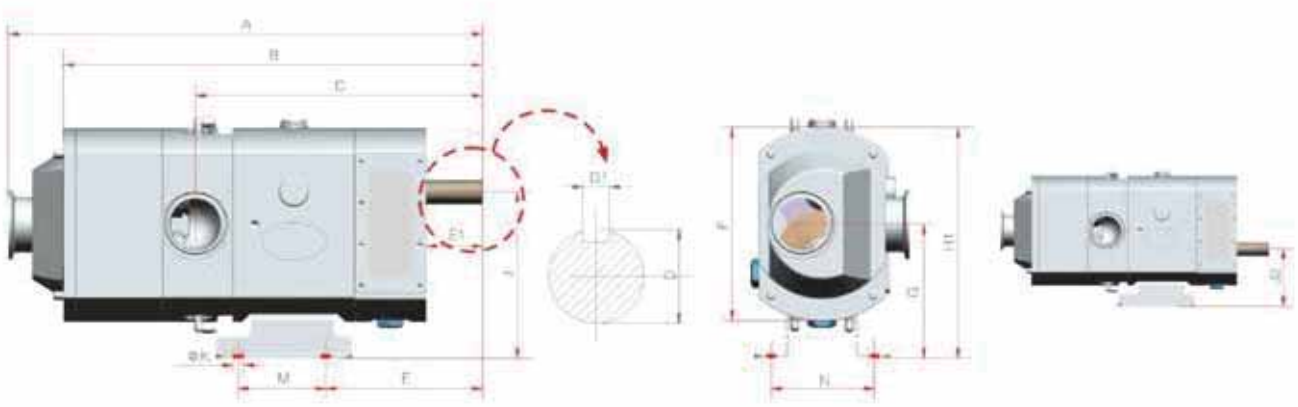

Model	Cover Port	Body Port	Assembly Dimension													
	Inlet	Outlet	B	C	D	D1	E	E1	F	G	H1	J	K	M	N	J2
TS_R/L-A11/18	1.5"-2"	1"-1.5"	385	265	22	6	122	52	178	123	217	153	12	115.5	95	93
TS_R/L-A21/26	1.5"-2"	1"-1.5"	385	264.5	22	6	122	52	178	123	217	153	12	115.5	95	93
TS_R/L-B13/26	2.5"-3"	2"-3"	520	354	28	8	181	57.5	225	149	265	186.5	12	190	125	112
TS_R/L-B23/36	2.5"-3"	2"-3"	520	354	28	8	181	57.5	225	149	265	186.5	12	190	125	112
TS_R/L-C17/32	3"-4"	3"-4"	634	411	42	8	196	73	322	226	390	286	18	300	194	164
TS_R/L-C27/48	3"-4"	3"-4"	634	411	42	8	196	73	322	226	390	286	18	300	194	164

Model	Clamp	Union	Flange
	A	A	A
TS_R/L-A11/18	436	445	447
TS_R/L-A21/26	436	445	447
TS_R/L-B13/26	589	601	595
TS_R/L-B23/36	589	601	595
TS_R/L-C17/32	720	727	730
TS_R/L-C27/48	720	727	730

EKİN ENDÜSTRİYEL

GEAR PUMPS

FLUID TRANSFER PRODUCTS

MIT Gear Pumps

MIT Gear pumps are positive displacement pumps without valves. Every MIT pump is a special solution. Gear pumps are designed to completely meet the needs of applications.

Features and Materials of MIT Gear Pumps

- Materials to be used in the pump; It would be change according to the product transferred by the pump.
- Since the chemical and physical properties of each liquid are different, their interaction with the pump material differs.
- For this, the materials used in the pump are selected according to the liquid. For example, the bearings of the pump used in the transfering of a liquid with a lubricant feature are bronze, while the bearings of the pump used in the transfering of an acid-borne liquid are selected as carbon.
- Food transfer pumps should be made of completely stainless or Teflon material that is in contact with the liquid.
- After the pump material is determined, it is decided that the pump will be jacketed or without jacketed according to the necessity of heating or cooling the pump.
- Internal bypass is optionally available on pumps.

Advantages of MIT Gear Pumps

- It can transfer medium sized solids.
- There is no friction between the surface materials during fluid transfer.
- The pump can be cleaned while it is connected to the service line.
- It works silently.
- IIt provides an easy flow by preventing the fluid passing through the material from freezing in pumps with heating jacket option. It easily transfers the product to be transferred without disturbing its feature.
- As an option, it can be used on a portable wheeled chassis, by making panel application, it provides convenience in different areas of use. All it takes is to connect the power line to the panel on the chassis.

- By taking its energy from the vehicle without taking up space on land vehicles, it provides convenience especially in the process of unloading and filling of food tankers.
- It performs the transfer of low and high viscosity products without any problem.

Information on Gear Pump Selection

When making gear pump selections, the features of the product to be transferred, the features of the line to be transferred are the desired technical details. These values are shown in the table in detail below.

Requested Details	Sample Information
Fluid Type	Chocolate, honey, buttermilk, etc.
Fluid Flow	m^3/H, L/H, TON/H etc.
Fluid Pressure	Bar, mSS etc.
Fluid Viscosity	cP, cSt etc.
Fluid Temperature	°C
Fluid Density	g/cm^3

Internal Eccentric Gear Pumps

Working Principle

Internally eccentric gear pumps are positive displacement and consist of two moving parts. While the ring gear connected to the pump shaft rotates, it also transmits motion to the idler gear and the idler gear rotates as well. During this rotation, the idler gear and the ring gear are separated from each other by means of a crescent and a vacuum is formed. Owing to the vacuum formed, the pump draws a certain amount of liquid into it. The liquid drawn into the pump moves towards the discharge nozzle in the thread cavities. In the discharge nozzle, the idler gear and the ring gear are intertwined to create pressure and allow the liquid to be discharged. Pump; Each time the pump shaft rotates, it transfers fluid as much as its volume. Therefore, the capacity of the pump is directly proportional to its size and RPM. The working principle of internal eccentric gear pumps is shown schematically below.

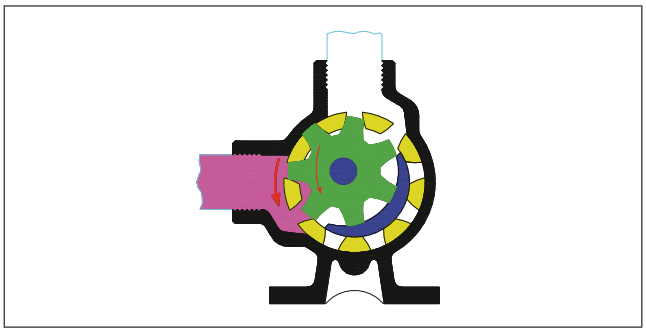

1- The ring gear (rotor) rotates in the direction of the arrow with the circular movement it receives from the motor, while the inner idler gear (star) rotates and separates from the ring gear. Fluid fills the gap caused by the separation of the gears.

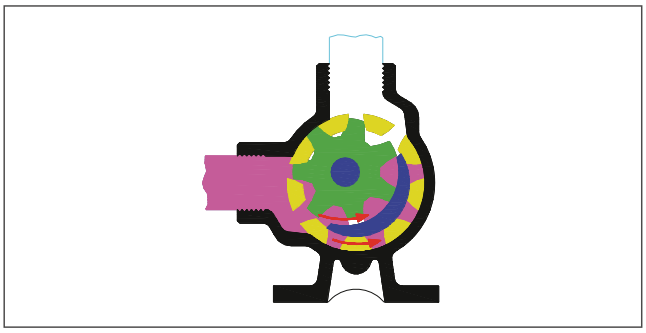

2- With the half-moon (crescent) located on the pump cover, the gears are separated from each other and liquid is transported with gear gaps.

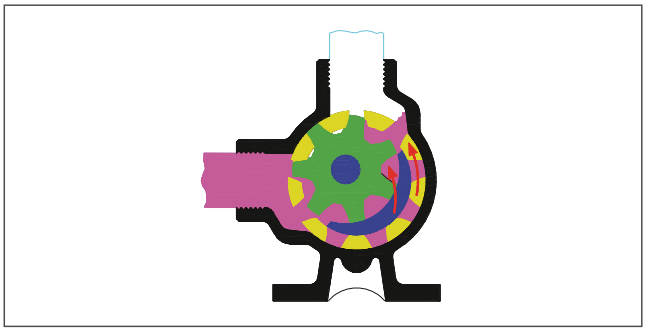

3- When the peripheral gear and the idler gear are intertwined, the liquid is thrown into the discharge channel.

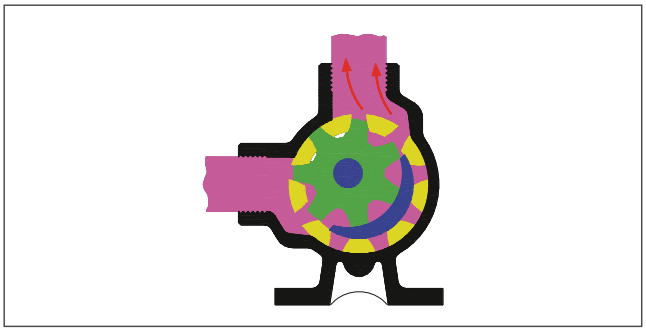

4- The liquid thrown into the discharge channel proceeds from the installation and the transfer process is realized.

Internal eccentric gear pumps are gathered in two main groups, console and non-console. The console provides the opportunity to convert the inlet and outlet ports of the pumps into eight different positions (45º interval) in terms of ease of assembly, and because the pump shaft bearing is more rigid, the pumps are able to operate for a longer life in heavier conditions.

CONSOLE-FREE PUMP

CONSOLE PUMP

Internal Eccentric Gear Pump Capacity Table

Pump Type	Pump Model	Inlet & Outlet	Max. Pressure Bar	In Outdoor			Most Used			Power (Kw)		Weight (Kg)	
				L/ Rotation	L/Min	M³/H	Rpm	Kw	Hp	Min.	Max.	Without Console	With Console
Internal Eccentric Gear	FB-41	1/4”	10	0,0011	1,65	0,1	1450	0,55	0,75	0,25	0,75	2,5	
	P-83	3/8”	6	0,004	5,83	0,35	1450	0,55	0,75	0,25	0,75	2	3
	Ö-1	1”	10	0,017	22,3	1,5	1450	1,1	1,5	0,55	1,1	7	13
	A-1	1”	10	0,022	33	2	1450	1,1	1,5	0,55	1,1	7	13
	B-211	1 1/2”	12	0,052	78	4,7	1450	1,1	1,5	0,75	3	12,6	18
	SO-211	1 1/2”	12	0,077	115,5	6,7	1450	1,1	1,5	0,75	3	12,6	18
	ZNP-2	2”	12	0,133	133	8	1000	4	5,5	1,5	7,5	-	42
	AKY-2	2”	14	0,3	300	18	1000	5,5	7,5	3	7,5	33	54
	URZ-2	2 1/2”	14	0,44	200	12	450	7,5	7,5	3	7,5	33	54
	ZNP-212	2 1/2”	14	0,85	375	22,5	450	11	10	4	11	40	90
	AKY-212	3”	14	1,45	580	35	400	11	15	5,5	15	48	97
	TCK-3	3”	14	1,45	580	35	400	11	15	5,5	15	48	97
	SCR-3	4”	14	2,1	840	50	400	11	15	11	37	135	240
	ATK-4	4”	14	2,1	840	50	400	11	15	11	37	135	240
	ADK-4	4”	14	3,83	1530	92	400	15	20	11	45		267
	DK-6	6”	14	3,83	1530	92	400	15	20	11	45		267
	DCK-6	6”	14	5,85	1750	105	300	30	40	22	45	210	270

Pump Connection Types

FLANGE CONNECTED

PIPE THREADED (SCREWED) CONNECTED

Heating Jackets

COVER HEATING JACKET

BODY HEATING JACKET

CONSOLE HEATING JACKET

CONSOLE + BODY + COVER HEATING JACKET

Helical & Spur Gear Pumps

Working Principle

Helical & Spur gear pumps are positive displacement and consist of two moving parts. The pump shaft transmits the circular motion it receives from the motor to the gear on the shaft. While the rotator gear transmits its movement to the rotated gear in the opposite direction, the gears separate from each other and a vacuum is formed. Thanks to the vacuum formed, the pump draws a certain amount of liquid into it. The liquid drawn into the pump moves towards the discharge nozzle in the dental cavities. In the discharge nozzle, the gears intertwine and create pressure and allow the liquid to be thrown out. Pump; Each time the pump shaft rotates, it transfers fluid as much as its volume. Therefore, the capacity of the pump is directly proportional to its size and speed. The working principle of Helical & Spur gear pumps is shown schematically below.

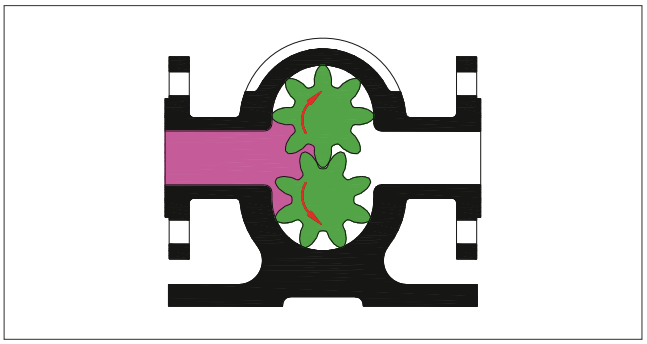

1- The Pump Shaft transmits the movement it receives from the motor to the rotator gear and the rotating gear begins to rotate in the direction of the arrow. While the rotating gear transmits its movement to the rotated gear in the opposite direction, the gears separate from each other. Liquid fills the gap created by the separation of the gears.

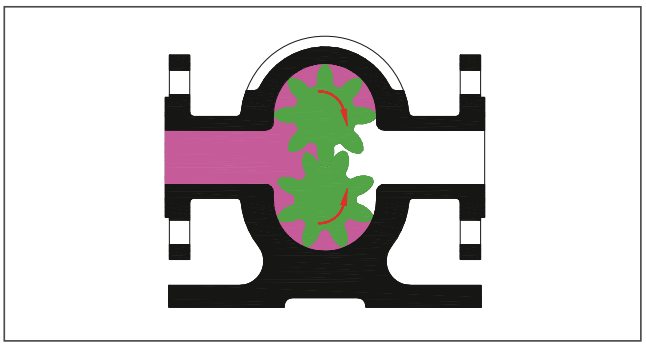

2- With the half-moon (crescent) located on the pump cover, the gears are separated from each other and liquid is transported with gear gaps.

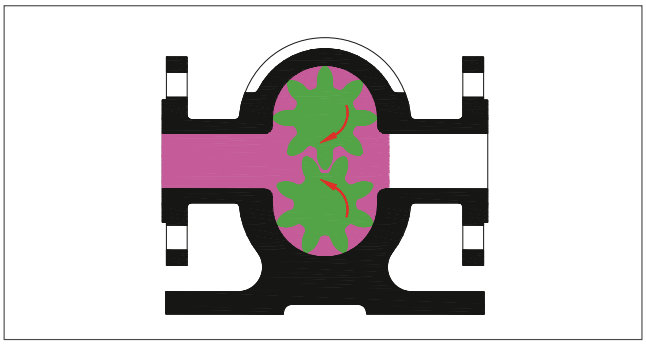

3- When the peripheral gear and the idler gear are intertwined, the liquid is thrown into the discharge channel.

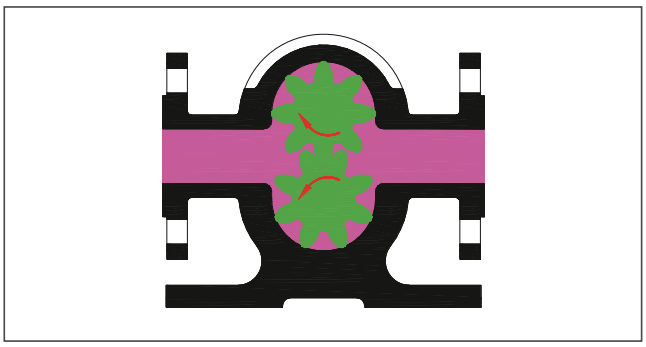

4- The liquid thrown into the discharge channel proceeds from the installation and the transfer process is realized.

Our helical & straight gear pumps are; Helical & straight gear pump, outboard ball helical gear pump, outboard ball & driven straight gear pump are gathered in three main groups. helical gear pumps operate with high efficiency in places where silent operation and continuous flow are desired. They have the ability to pass small and crushed particles in the liquid during transfer. Spur gear pumps work at high efficiency in the transfer of corrosive liquids, non-lubricating liquids and high temperature liquids in the places where medium pressure is required, externally ball and externally ball & driven helical gear pumps.

Helical and Spur Gear Pump Capacity Chart

Pump Type	Pump Model	Inlet/ Outlet	Max. Pressure	In outdoor			Most Used			Power(KW)		Weight (KG)
				L/ Rotation	l/Min	M³/H	RPM	Kw	Hp	Min.	Max.	
Helical & Spur Gear	GP-83	3/8”	20	0,007	10,5	0,63	1450	0,55	0,75	0,25	0,75	2
	GP-411	1”	20	0,047	70,5	4	1450	1,1	1,5	0,75	4	14
	GP-1	1 1/4”	20	0,0619	92,85	5,5	1450	2,2	3	1,1	4	15
	GPK-211	1 1/2”	20	0,143	214,5	12,8	1450	3	4	2,2	7,5	21
	GP-211	1 1/2”	20	0,226	339	20	1450	5,5	7,5	2,2	11	27
	HLS-2	2”	14	0,44	440	26,4	1000	5,5	7,5	5,5	15	70
	HLS-212	2 1/2”	15	1,04	468	28	450	5,5	7,5	5,5	15	70
	FNR-212	2 1/2”	15	1,04	468	28	450	5,5	7,5	5,5	15	85
	FNRT-212	2 1/2”	15	1,04	999	28	450	5,5	7,5	5,5	15	100
	HLS-3	3”	15	2,22	999	60	450	15	20	11	22	130
	HLSB-3	3”	15	2,22	999	60	450	15	20	11	22	150
	HLSBT-3	3”	15	2,22	999	60	450	15	20	11	22	165
	HLS-4	4”	15	2,22	999	60	450	15	20	11	22	105
	HLSB-4	4”	15	2,22	999	60	450	15	20	11	22	125
	HLSBT-4	4”	15	2,22	999	60	450	15	20	11	22	140
	HLSC-8	8”	15	7,25	2250	135	300	30	40	18,5	110	760
	HLS-10	10”	15	11,7	2925	175	250	75	102	35	130	750


EKİN ENDÜSTRİYEL

EKİN ENDÜSTRİYEL

MAGNETIC DRIVE PUMPS THERMOPLASTIC PUMPS

FLUID TRANSFER PRODUCTS

Mag Drive Pumps

Mag drive pumps have a particular sealless design that is suitable for pumping corrosive and dangerous liquids thanks to the high chemical resistance and absence of leakage and emissions. The structure is really simple and it requires a very reduced maintenance with consequent save in terms of repairing and spare parts costs during the pump life. The external magnet placed on the drive shaft transmits the motion to the internal magnet connected to the impeller which rotates and moves the fluid through the pump.

Advantages

1. This special hermetic pump design prevents any leakage of fluid and fugitive emissions that, in case of chemicals, corrosive liquids, explosive and flammable fluids, could be very dangerous for people dealing with the pump and for the environment. So mag drive pumps allow to follow strict environmental and safety objectives required by many regulations. We shouldn't forget also that some liquids could be very expensive and their loss due to a seal failure may cause high unnecessary extra costs.
2. Mag drive pumps are very reliable and need very low maintenance thanks to their simple design. With normal working conditions these pumps can work without any kind of repair for more than a decade so their life cost is highly reduced. Nevertheless it's always better to check o-rings and bearings every one/two years just to be sure that there is no wearing.
3. The coupling is very easy because there is no need for a motor/pump alignment.

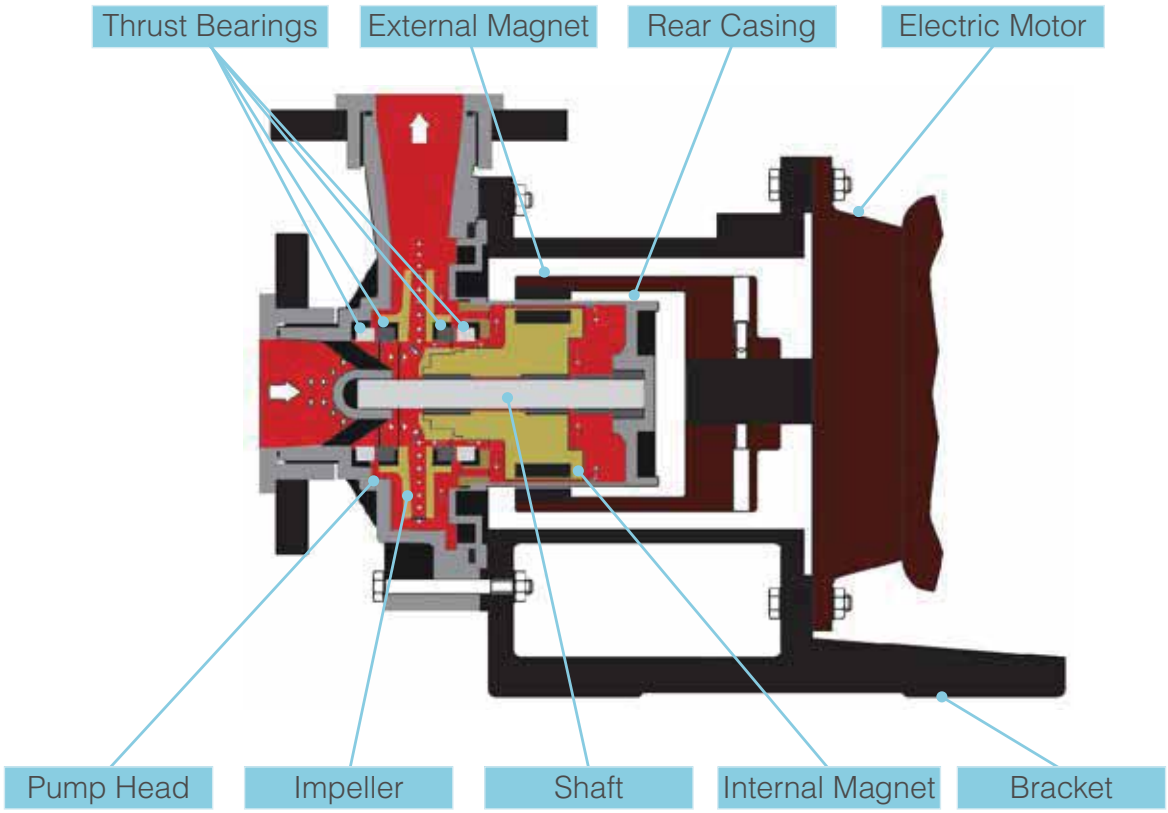

Seal-Less Mag Drive Centrifugal Pumps

In seal-less magnetic drive centrifugal pumps, the external magnet is directly connected to the motor shaft and it transmits the torque to the internal magnet.

The magnetic field created produces a rotation without physical contact between the parts so the impeller spins and moves the fluid. The rear casing is placed between the two magnet joints and it hermetically closes the hydraulic part from the motor.

Magneto can supply three different models of mag drive centrifugal pumps:

MG PP / PVDF

- Thermoplastic pumps made in PP or PVDF.
- Capacity up to 45 m^3/h.
- Head up to 33 mlc.
- Injection molded parts.

MGXL

- Thermoplastic pumps made in PP or PVDF.
- Capacity up to 130 m^3/h.
- Head up to 48 mlc.
- Pump head machined from a block.

MG SS316

- Metallic pumps made in stainless steel AISI316.
- Capacity up to 32 m^3/h.
- Head up to: 24 mlc.

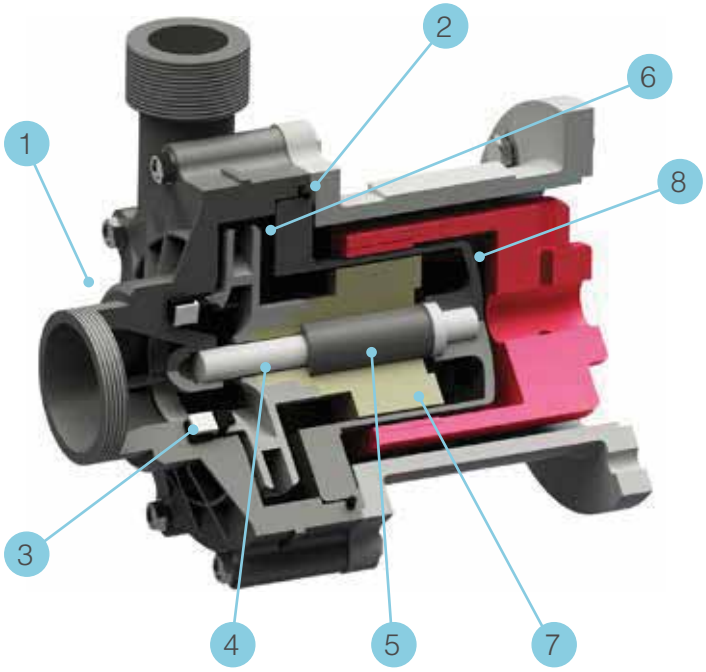

MATERIALS IN CONTACT WITH THE LIQUID			
Part Number / Description	Centrifugal Pumps		
	MG PP / PVDF	MGXL	MG SS316
1 - Pump Head	PP or PVDF	PP or PVDF	AISI 316
2 - O-Ring	EPDM or Viton	EPDM or Viton	EPDM or Viton
3 - Casing Thrust Bush	Ceramic Al_2O_3 + EPDM or Viton	Ceramic Al_2O_3 + EPDM or Viton	PTFEC
4 - Shaft	Ceramic Al_2O_3 %99,7	Ceramic Al_2O_3 99,7%	HASTELLOY – C276
5 - Bearings	PTFEC	PTFEC	PTFEC
6 - Impeller	PP or PVDF	PP or PVDF	AISI 316
7 - Internal Magnet	PP or PVDF + NdFeB	PP or PVDF + NdFeB	AISI 316 + SmCo
8 - Rear Casing	PP or PVDF	PP or PVDF	AISI 316

Thermoplastic Mag-Drive Centrifugal Pumps

Mag drive centrifugal pumps series MG PP/PVDF are made of thermoplastic materials (Polypropylene and PVDF) and are suitable for high corrosive liquids. Thanks to the innovative mag drive system, pumps model MG PP/PVDF reduce the risks of leakage and emissions and the maintenance costs. The transmission of the motion occurs through magnetic joints without any mechanical seal and this design guarantees the maximum safety and efficiency. The pumped liquid has to be clean and without solids in suspension. High torque magnetic coupling NdFeB standard. Suitable for high corrosive liquids.

Technical Features

Materials available: PP / PVDF.
Materials in contact with the liquid;
Casing and impeller: PP/PVDF;
- O-ring: EPDM (Standard for PP pumps);
- Viton (Standard for PVDF pumps);
- Static Shaft: Al2O3 99,7 %; Bushing PTFEC.

Max flow: 45 m3/h; Max head 33 mlc.
Temperature: PP: max 70°C – PVDF: max 90 °C.
Max viscosity: 200 cSt.
Engine Power: It changes between 0.12 kW and 7.5 kW, depending on the model.
Connection Diameter: It changes between 1 “and 3” depending on the model.
Pressure rating: NP 6 at 20 °C.

Performance Curves 50 Hz – 2900 RPM

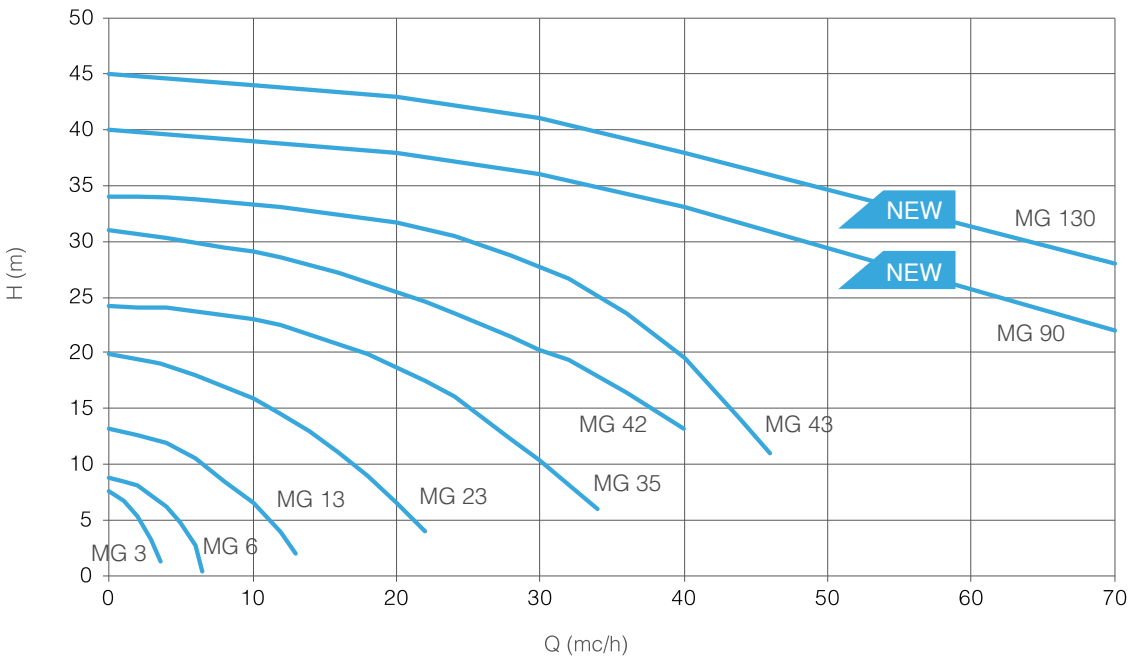

Thermoplastic Mag-Drive Centrifugal Pumps

Main Features

Mag drive centrifugal pumps series MGXL are made of thermoplastic materials (Polypropylene or PVDF) and, thanks to their strong and resistant structure, they are suitable for high corrosive fluids and heavy duty applications. The pump casing is machined from a solid block for a great resistance in terms of pressure and temperature and the transmission of the motion occurs through magnetic joints without any mechanical seal. This magnetic drive system guarantees the maximum safety and efficiency reducing risks of leakage and emissions.

- Materials available: PP / PVDF.
- Materials in contact with the liquid:
  Pump head and impeller PP or PVDF;
  O-Ring EPDM (standard for PP pumps);
  Viton (standard for PVDF pumps);
  Shaft Al_2O_3 99,7%; Bushing PTFEC.
- Max capacity: 130 m^3/h.
- Max head: 48m.
- Max temperature: PP: 70 °C –PVDF: 90 °C.
- Flanged or threaded connections according to the pump size.
- Strong structure, maximum resistance to corrosive liquids.

Optional:

- Dry-running protection.

Typical Applications:

- High corrosive liquids.
- Toxic, noxious and carcinogenic liquids.

Performance Curve 50 Hz – 2900 RPM

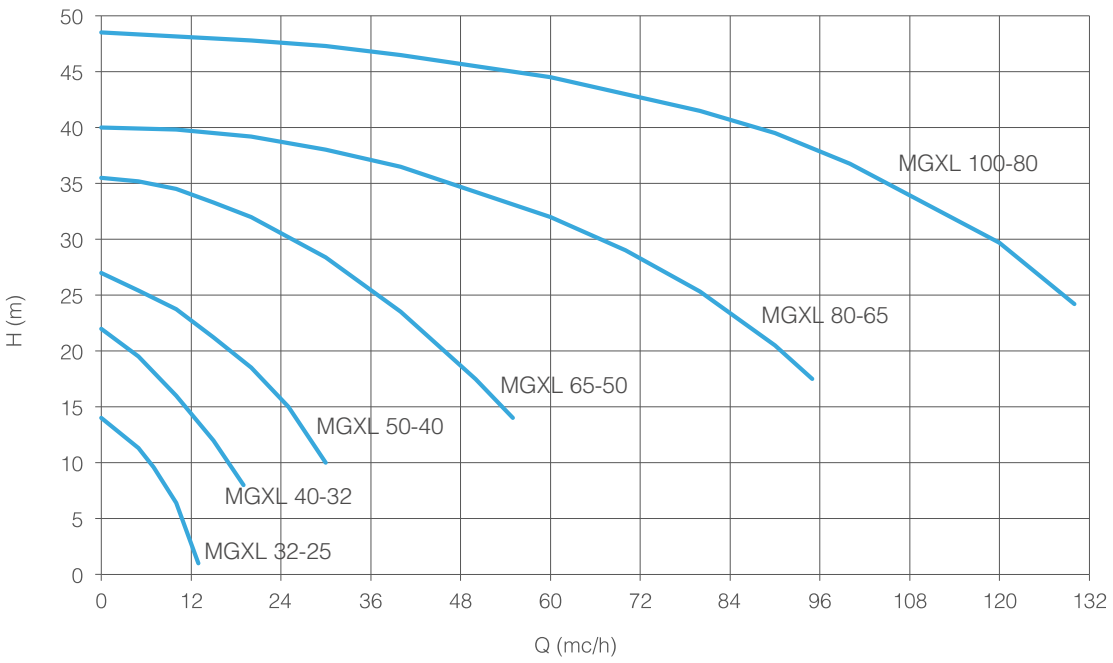

Metallic Mag-Drive Centrifugal Pumps

Standard:

- Threaded in and out connections.

Optional:

- Pump available in other materials (HC 276; Titanium).
- Atex version
- Explosion proof motor.
- Flanges available.
- Dry-running protection.
- Baseplate.
- Overload switch.

Main Features

Mag drive centrifugal pumps series MG SS are made of AISI 316 or, on request, of other metallic materials (such as HASTELLOY or TITANIUM) and are suitable for hydrocarbons, solvents and dangerous liquids. Thanks to the innovative mag drive design, pumps model MG SS reduce the risks of leakage and emissions and the maintenance costs. The transmission of the motion occurs through magnetic joints without any mechanical seal. This design guarantees the maximum safety and efficiency. The pumped liquid has to be clean and without solids in suspension. Pumps series MG SS 316 are also available in ATEX version for zone 1 and 2 (pump model EM-C).

- Materials available: AISI 316;
- Materials in contact with the liquid:
  casing and impeller: stainless steel AISI 316;
  O-Ring: EPDM/VITON;
  Bushing: PTFE/CARBON;
  Shaft: Hastelloy C276.
- Max flow: 32 m^3/h; max head: 24 mlc.
- Max temperature: 160 °C.
- Max viscosity: 200 cSt.
- Pressure rating: NP 10 at 20 °C.

Performance Curves 50 Hz – 2900 RPM

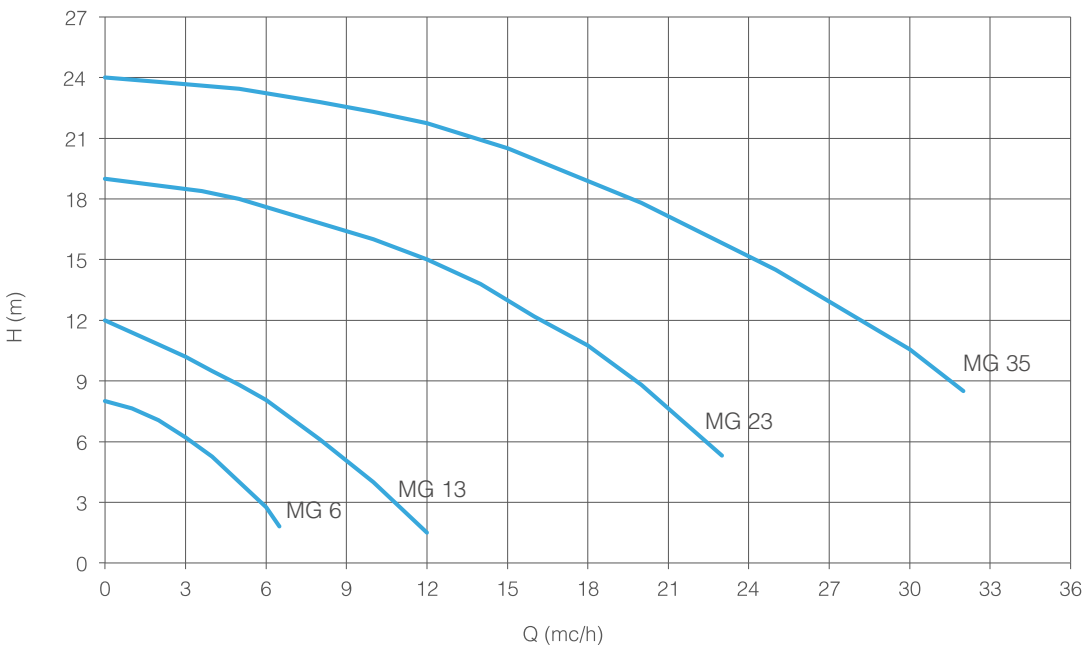

Thermoplastic Self-Priming Mag Drive Centrifugal Pumps

Standard:

- Gas threaded in and out connections.

Optional:

- Flanges connection.

Main Features

MG-SP pumps combine the typical features of ours mag drive centrifugal pumps with the self-priming capability. At sea level, these pumps can prime up to 6 meters in a very short time. MG-SP pumps can be made of Polypropylene (PP) or PVDF and assure high resistance and chemical compatibility with a large range of corrosive and dangerous fluids. Thanks to the innovative seal-less magnetic drive system, pumps model MG-SP guarantee the maximum safety and efficiently reducing risks of leakage and emissions in the environment and the maintenance costs. The pumped liquid has to be clean, without solids in suspension.

- Materials available: PP or PVDF;
- Materials in contact with the liquid:
  Casing and Impeller: PP/PVDF;
  O-Ring: EPDM (standard for PP pumps) / VITON (standard for PVDF pumps);
  Static Shaft: Al2O3 99.7%;
  Bearing: PTFEC.
- Capacity up to 26 m^3/h.
- Head up to 21 m.
- Max temperature: PP: 70 °C - PVDF: 90 °C.
- Max viscosity: 200 cSt.
- Pressure rating: PN6 at 20 °C.
- Self-priming up to 6m at sea level.

Performance Curves 50 Hz – 2900 RPM

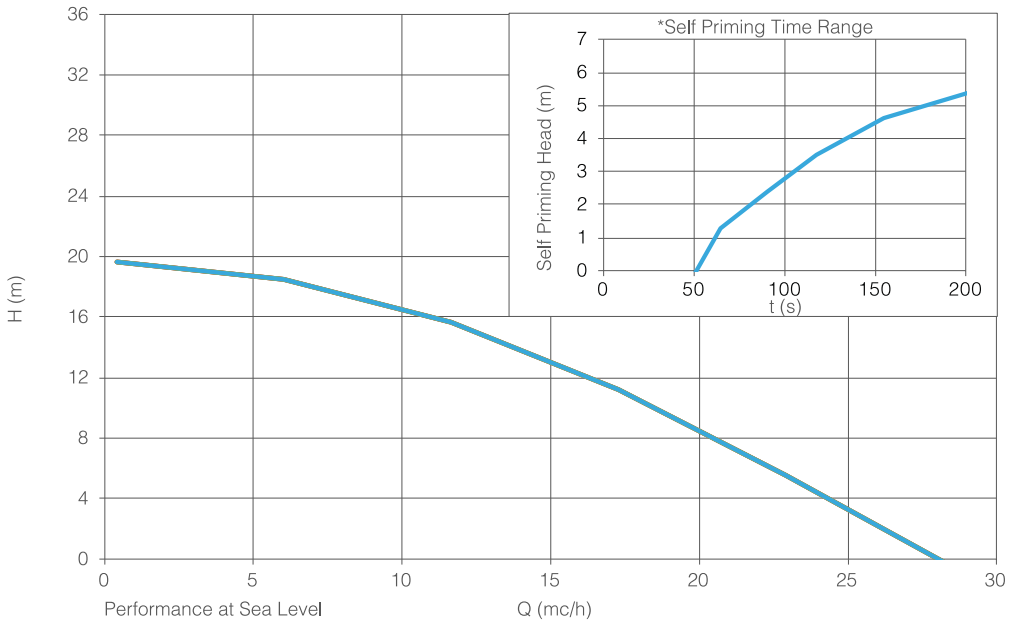

Seal-Less Mag Drive Turbine Pumps

In seal-less magnetic drive turbine pumps, the external magnet is directly connected to the motor shaft and it transmits the torque to the internal magnet.

The magnetic field created produces a rotation without physical contact between the parts and the turbine spins and moves the fluid. The rear casing is placed between the two magnet joints and it hermetically closes the hydraulic part from the motor.

Mangeto can supply three different models of mag drive turbine pumps:

MGT

- Thermoplastic pumps made in PP or PVDF.
- Capacity up to 9 m3/h.
- Head up to 50 mlc.

MGT-SP

- Thermoplastic pumps made in PP or PVDF.
- Capacity up to 7 m^3/h.
- Head up to 25 mlc.
- Machined from a block.
- Self-priming up to 3 m.

MGT-SS

- Metallic pumps made in stainless steel AISI316.
- Capacity up to 7 m^3/h.
- Head up to: 80 mlc.

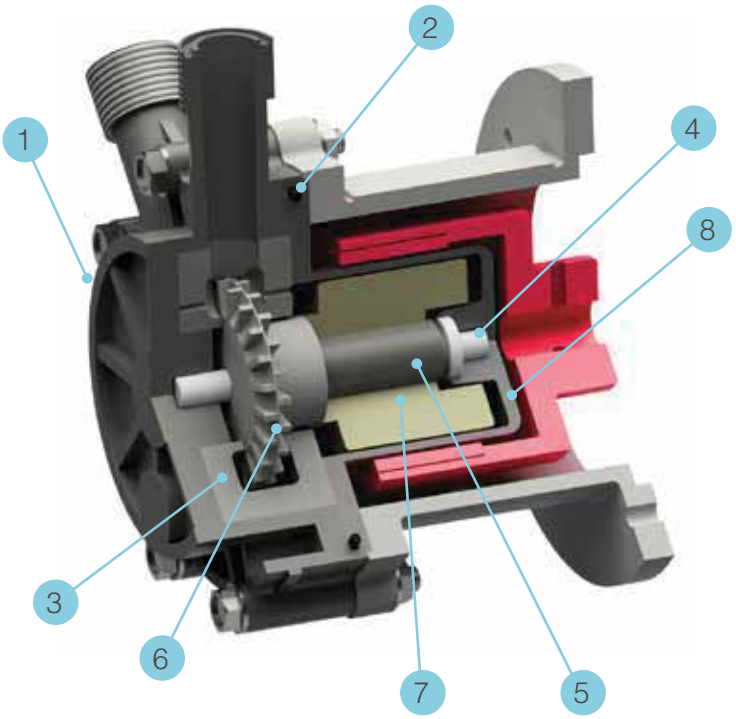

MATERIALS IN CONTACT WITH THE LIQUID			
Part Number / Description	Turbine Pumps		
	MGT	MGT-SP	MGT-SS
1 - Pump Head	PP or PVDF	PP or PVDF	AISI 316
2 - O-Ring	EPDM or Viton	EPDM or Viton	EPDM or Viton
3 - Front and Rear Disc	PP or PVDF	PP or PVDF	PTFEC
4 - Shaft + Ring	Ceramic Al_2O_3 %99,7	Ceramic Al_2O_3 %99,7	HASTELLOY – C276
5 - Bearing	PTFEC	PTFEC	PTFEC
6 - Impeller	PVDF	PVDF	AISI 316
7 - Internal Magnet	PP or PVDF + NdFeB	PP or PVDF + NdFeB	AISI 316 + SmCo
8 - Rear Casing	PP or PVDF	PP or PVDF	AISI 316

Thermoplastic Mag-Drive Regenerative Turbine Pumps

Standard:

- Gas threaded In and Out connections.
- Static shaft in high purity ceramic.
- Chemical resistant PTFE/carbon sleeve bearings.
- High torque magnetic coupling.
- Direct starting motor.

Optional:

- DIN or ANSI 150 flanges available.
- Baseplate.
- Dry-running protection.

Main Features

Mag drive regenerative turbine pumps series MGT are made of thermoplastic materials (polypropylene-PP and PVDF) and are suitable for pumping high corrosive liquids. Thanks to the innovative mag drive system, pumps model MGT reduce risks of leakage and emissions and the maintenance costs. The transmission of the motion occurs through magnetic joints without any mechanical seal. This sealless design guarantees the maximum safety and efficiency. The pumped liquid has to be clean and without solids in suspension.

- Materials available: PP / PVDF.
- Plastic injection moulded.
- Materials in contact with the liquid:
  Casing and rear casing: PP/PVDF; Impeller: PVDF;
  O-ring: EPDM (standard for PP pumps);
  Viton (standard for PVDF pumps);
  Shaft: Al_2O_3 99,7%;
  Bearing: PTFEC.
- Max flow: 9 m^3/h; Max head 50 mlc.
- Temperature: PP: max 70° C - PVDF: max 90 °C.
- Max viscosity: 40 cPs.
- Pressure rating: NP 6.
- It handles up to 20% entrained gas.
- MGT pump resists cavitation.

Performance Curves 50 Hz – 2900 RPM

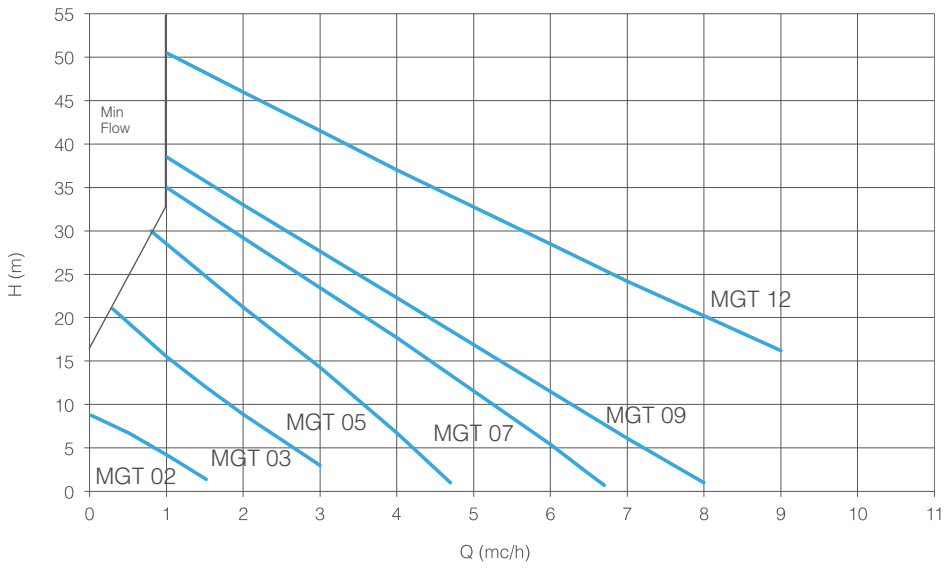

Thermoplastic Mag-Drive Regenerative Turbine Pumps Self-Priming

Main Features

MGT-SP pumps can prime up to 5 m with water at ambient temperature. The casing is made from a PP solid machined block and the impeller in PVDF for maximum chemical resistance. The casing is machined from a solid block. The impeller in PVDF is self-balanced to eliminate thrust bearing wear and it is separate to minimize the maintenance costs. This kind of pump offers maximum resistance withstanding also external corrosion. It handles up to 20% entrained gas and resists cavitation.

- Max flow: 6 m^3/h; max head 28 mlc.
- Max temperature: PP: 70° C - PVDF: 90 °C.
- High torque magnetic coupling.
- Chemical resistant PTFE/carbon sleeve bearings.
- Static shaft in high purity ceramic.
- Direct starting motor.

Standard:

- Gas threaded in and out connections.
- Static shaft in high purity ceramic.
- Chemical resistant PTFE/carbon sleeve bearings.
- High torque magnetic coupling.
- Direct starting motor.

Optional:

- ANSI 150 flanges available.
- Baseplate.

Performance Curves 50 Hz – 2900 RPM

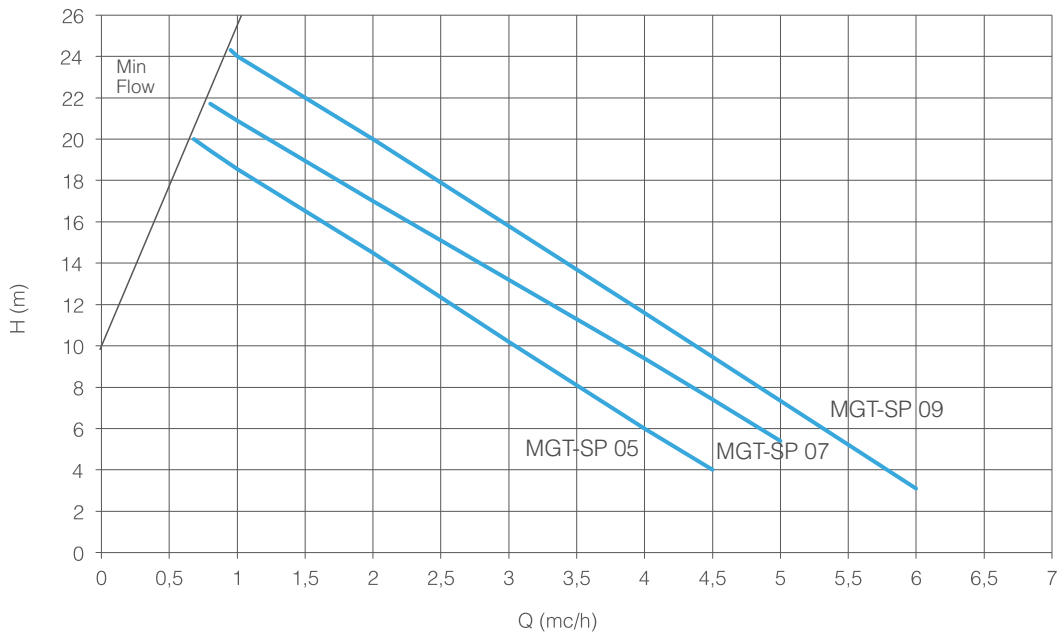

Metallic Mag-Drive Regenerative Turbine Pumps

Standard:

- Static shaft in HC 276.
- Chemical resistant PTFE/Carbon sleeve bearings standard.
- High torque magnetic coupling.
- Direct starting motors.

Optional:

- ANSI 300 flanges available.
- Atex version.
- Explosion proof motor.
- Dry-running protection.
- Baseplate.

Main Features

Mag drive regenerative turbine pumps series MGT-SS are made of AISI 316 or, if requested, of other metallic materials (HASTELLOY or TITANIUM) and are suitable for solvents, hydrocarbons, dangerous and inflammable liquids. Thanks to the innovative mag drive system, pumps model MGT-SS reduce the risks of leakage and emissions and maintenance costs. The transmission of the motion occurs through magnetic joints without any mechanical seal. This design guarantees the maximum hermetic safety and efficiency. The pumped liquid has to be clean and without solids in suspension. Pumps series MGT-SS are also available in ATEX version for zone 1 and 2 (pump model EM-T).

- High head / low flow capability minimizes by-pass requirements.
- Materials available: AISI 316;
- Materials in contact with the liquid:
  Casing and impeller: stainless steel AISI 316;
  O-ring EPDM/VITON;
  Bushing: PTFEC; shaft: Hastelloy C276.
- Max flow 7 m3/h; max head 80 mlc.
- Max Temperature: 160 °C.
- Pressure Rating NP 25 at 20 °C.
- Impeller design handles up to 20% entrained gas.
- Ideal for pumping liquefied gas.

Performance Curves 50 Hz – 2900 RPM

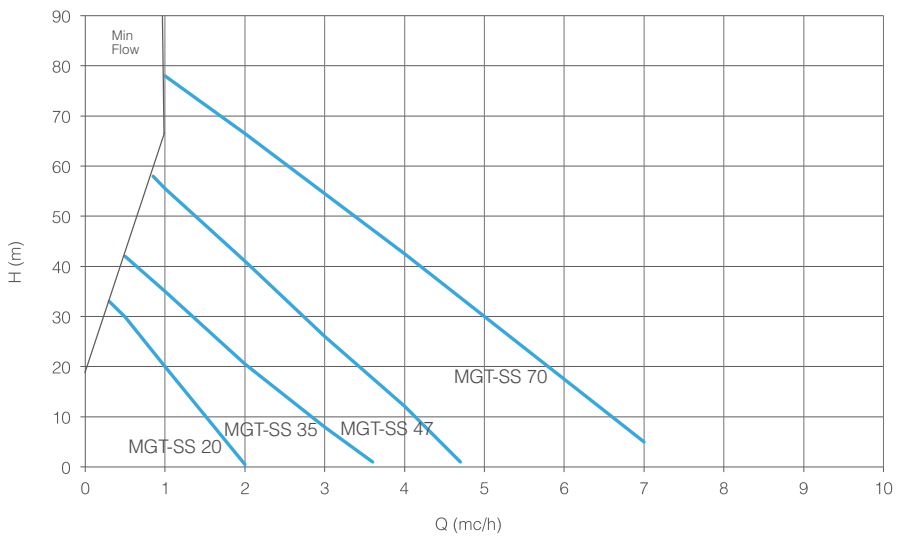

Seal-Less Mag Drive Vane Pumps

In seal-less magnetic drive vane pumps, the external magnet is directly connected to the motor shaft and it transmits the torque to the internal magnet. The magnetic field created produces a rotation without physical contact between the parts and the rotor spins. The vanes inside the rotor slide in and out of their seat and they move the fluid. The rear casing is placed between the two magnet joints and it hermetically closes the hydraulic part from the motor.

Mangeto can supply two different models of volumetric pumps:

MGP

- Thermoplastic pumps made in PP or PVDF.
- Capacity up to 1000L/h.
- Pressure up to 5 bar.

MGP-S

- Metallic pumps made in stainless steel AISI316.
- Capacity up to 2100L/h.
- Pressure up to: 13 bar.
- Dry self-priming.

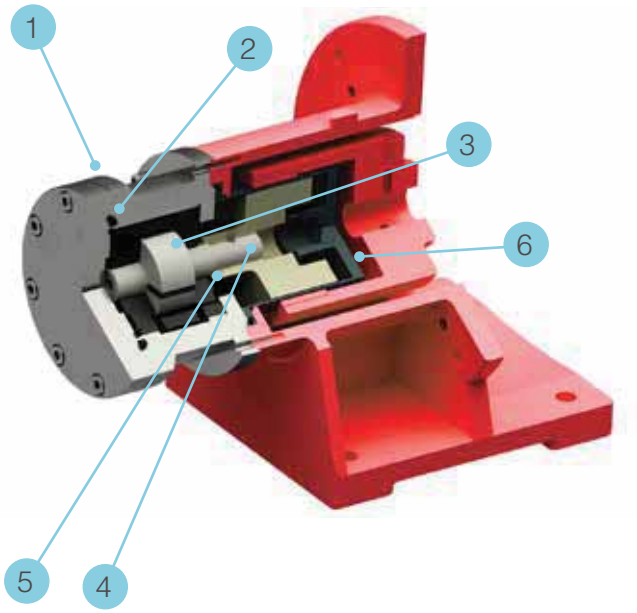

MATERIALS IN CONTACT WITH THE LIQUID		
Part Number / Description	Vane Pumps	
	MGT	MGT-SP
1 - Pump Body + Cover	PP or PVDF	AISI 316
2 - O-Ring	EPDM or Viton	EPDM or Viton
3 - Flanges Stator Vanes + Pins	PVDF+ Grafit	Graphite
4 - Rotor Shaft	PVDF	AISI 316
5 - Internal Magnet	PP or PVDF + NdFeB	AISI 316 + SmCo
6 - Rear Casing	PP or PVDF	AISI 316

Thermoplastic Mag-Drive Rotary Vane Pumps

System Pressure:

- 8 bar.

Standard:

- High torque magnetic coupling.
- Direct starting motor.

Optional:

- Flanges available.
- Dry-running protection.
- Baseplate.

Main Features

Mag drive rotary vane pumps series HPP-HPF are made of thermoplastic materials (PP/PVDF) and are suitable for corrosive liquids, alkalis, toxic, noxious and carcinogenic fluids. Thanks to the innovative mag drive system, pumps model HPP-HPF reduce the risks of leakage and the maintenance costs. HPP-HPF pumps are useful for low flow and high head applications such as Pilot Plants and Sampling.

- PP, PVDF.
- Materials in contact with the liquid:
  Casing, end cover, internal magnet and rear casing: PP/PVDF;
  O-ring: EPDM (standard for PP pumps);
  VITON (standard for PVDF pumps).
- Graphite Stator.
- Rotor shaft: PVDF.
- Max flow: 1000L/h.
- Max pressure: 5 bar.
- Temperature: PP: max 70 °C - PVDF: max 90 °C.

Performance Curves 50 Hz – 1450 RPM

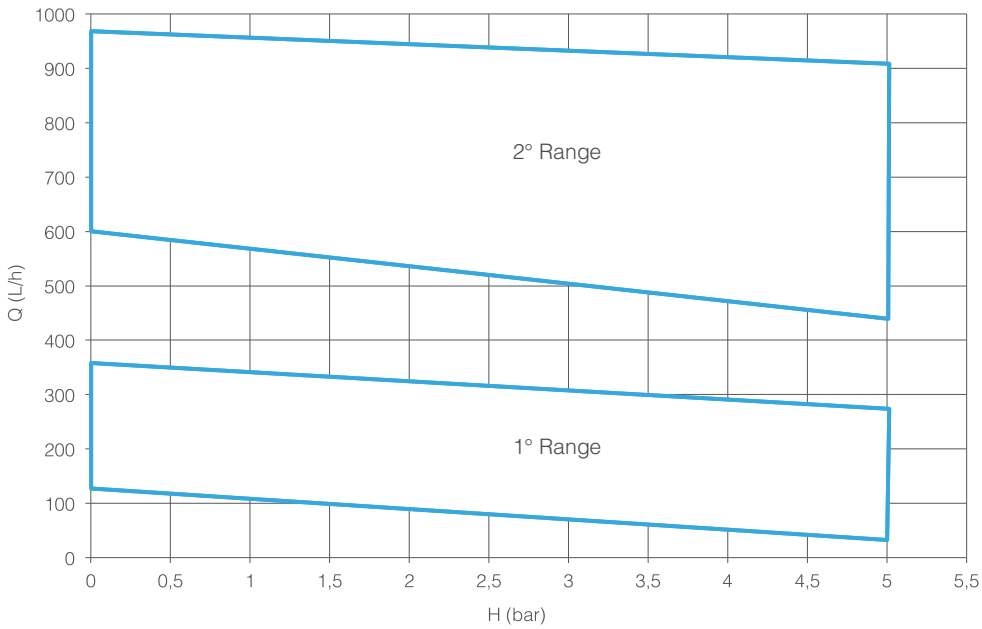

Metallic Rotary Vane Mag-Drive Pumps Dry Self-Priming

Standard:

- High torque magnetic coupling.
- Direct starting motor.

Optional:

- Flanges available.
- Dry-running protection.
- Baseplate.
- Atex version (Pump mode. EM-P).
- Explosion proof motor.

Main Features

Rotary vane mag drive pumps series HTP are made of AISI 316 or, if requested, of other metallic materials (Titanium and Hastelloy) and are suitable for hydrocarbons, solvents, heat transfer oils, refrigerants, cryogenics and radioactive liquids. Thanks to the innovative mag drive system, pumps model HTP reduce the risks of leakage and emissions and the maintenance costs. HTP pumps are useful for low flow and high head applications such as Pilot Plants, Sampling and Flushing of mechanical seals. Especially designed for thin non-lubricating liquids and/or high differential pressure. Pumps series HTP are also available in ATEX version for zone 1 and 2 (pump model EM-P).

- Materials available: AISI 316.
- Materials in contact with the liquid:
  Pump body, end cover and rotor: AISI 316;
  O-ring: EPDM/VITON; carbon graphite stator.
- Max flow: 2100L/h.
- Max pressure: 13 bar.
- Temperature range: from – 70 °C to + 200 °C.
- Max viscosity: 2000 cPs.
- System Pressure: 25 bar.

Performance Curves 50 Hz – 1450 RPM

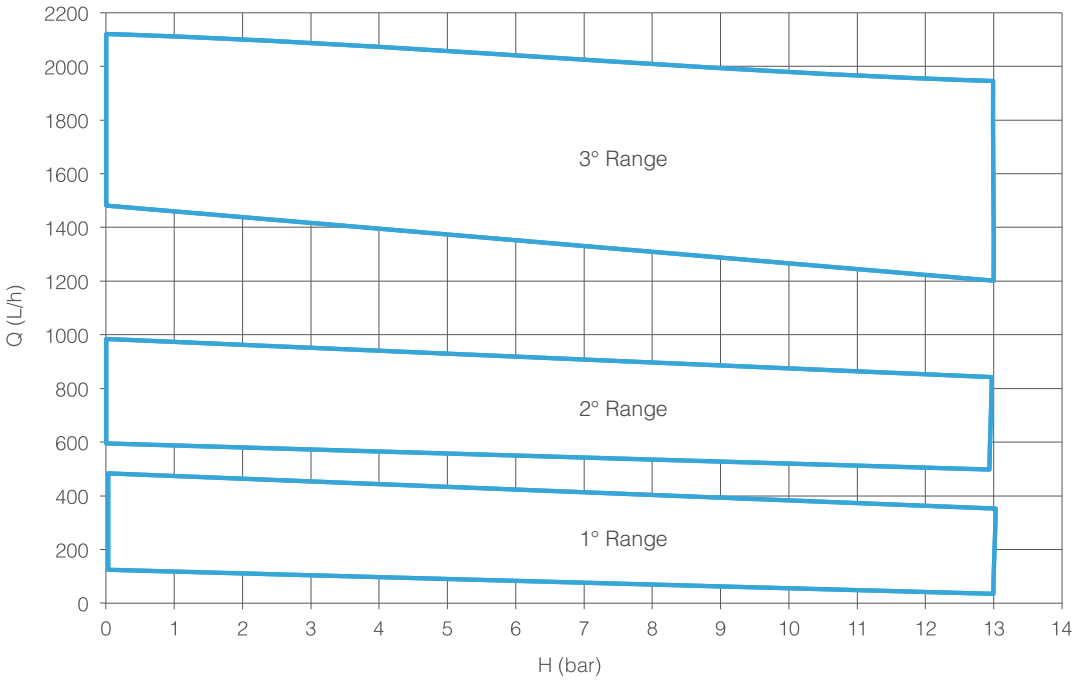

Mechanical Seal Centrifugal Pumps

Mechanical seal centrifugal pumps are the right solution for applications involving solids in the liquid because their design with open impeller allows to pump dirty liquids and fluids with high viscosity. The seal in mechanical seal pumps is composed by a static ring and a rotating ring placed on the pump shaft which is directly coupled to the motor shaft. The two surfaces sliding together need to be lubricated and the seal lubricant is the liquid itself that is being pumped.

Mangeto can supply the following model of mechanical seal pump:

MS

- Thermoplastic pumps made in PP or PVDF.
- Capacity up to 58 m^3/h.
- Head up to 38 mlc.
- Two different kind of mechanical seal available: lip seal for model MS 95-10, internal PTFE bellow mechanical seal for all the other pump sizes.

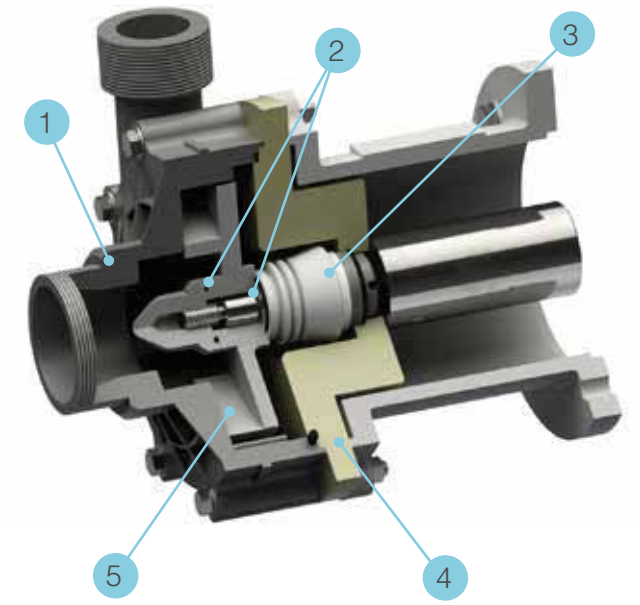

MATERIALS IN CONTACT WITH THE LIQUID	
Part Number / Description	Mechanical Seal Pumps
	MS
1 - Pump Head	PP or PVDF
2 - O-Ring	EPDM or Viton
3 - Mechanical Seal	PTFE + Al_2O_3
4 - Cover	PP or PVDF
5 - Impeller and Impeller Nut	PP or PVDF + NdFeB

Mechanical Seal Centrifugal Pumps

Standard:

- Gas threaded in and out connections.
- Direct starting motor

Optional:

- Flanges available.
- Dry-running protection.
- Baseplate.

Main Features

Centrifugal pumps series MS with mechanical seal are made of thermoplastic materials (Polypropylene and PVDF) and are suitable for high corrosive liquids containing solids in suspension. The seal of pumps MS size 95-10 is guaranteed by a special elastomeric lip seal, while all the other pump sizes (from size 110 to 170) are equipped with an internal PTFE bellows mechanical seal (sic/ceramic), which is manufactured by Ekin Endüstriyel.

- Materials available: PP / PVDF.
- Flow up to 60 m^3/h; Head up to 38 mlc.
- Temperature: PP: max 70 ° C - PVDF: max 90 °C.
- Max viscosity: 200 cSt.
- Pressure rating: NP 6 at 20 °C.
- Lip seal for pumps size 95-10; internal PTFE bellows mechanical seal for all the other sizes.
- Suitable for high corrosive liquids containing solids in suspension.

Performance Curves 50 Hz – 2900 RPM

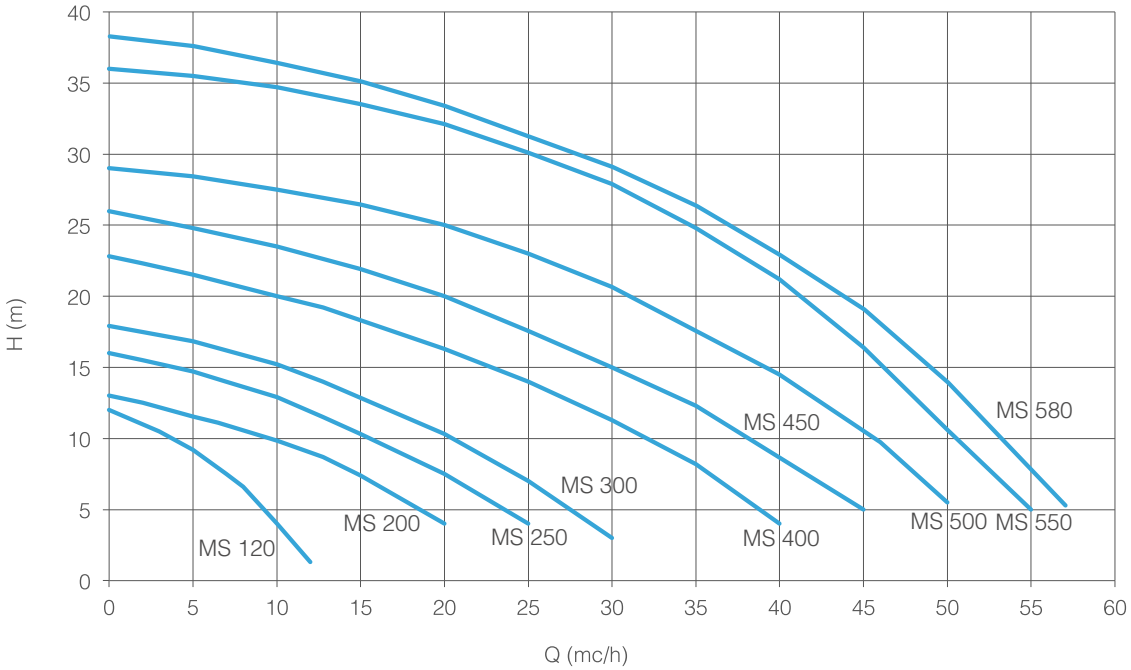

Vertical Centrifugal Pumps

Vertical centrifugal pumps are suitable for installations with pump immersed directly in the tank. Mangeto can supply the following models of vertical pumps:

VS

- Thermoplastic pumps made in PP or PVDF.
- Capacity up to 40 m^3/h.
- Head up to 22 mlc.
- Monobloc pump with semi open-impeller.
- Suitable for high corrosive liquids with solids in suspension.
- Maximum length 1000 mm.

VSXL

- Thermoplastic pumps made in PP or PVDF.
- Capacity up to 57 m^3/h.
- Head up to 39 mlc.
- Centrifugal pump with coupling and semi open-impeller.
- Suitable for high corrosive liquids with solids in suspension.
- Maximum column length 2000 mm.

MG-V

- Vertical magnetic drive pumps.
- Thermoplastic pumps made in PP or PVDF.
- Capacity up to 23 m^3/h.
- Head up to 20 mlc.
- Column length: 320 mm.

VS-SS

- Vertical centrifugal cantilever pumps.
- Made in AISI316.
- Capacity up to 24 m^3/h.
- Head up to 26 mlc.
- Especially designed for the production of PCBs.

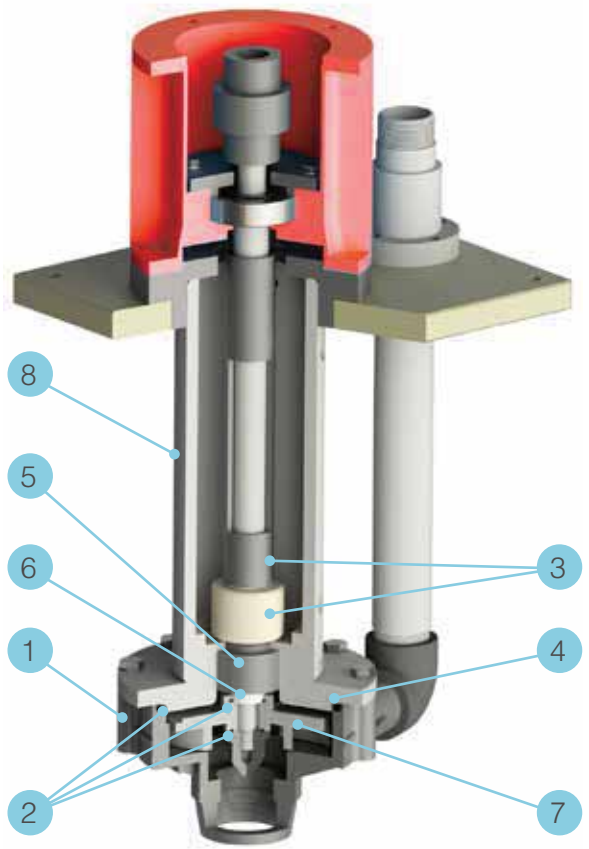

MATERIALS IN CONTACT WITH THE LIQUID		
Part Number / Description	Vertical Pumps	
	VS	VSXL
1 - Pump Head	PP or PVDF	PP or PVDF
2 - O-Ring	EPDM or Viton	EPDM or Viton
3 - Shaft Covering	PP	PP
4 - Cover	PP or PVDF	PP or PVDF
5 - Bushing	PTFEC	PTFEC
6 - Wear Bushing	Al_2O_3	Al_2O_3
7 - Impeller	PP or PVDF	PP or PVDF
8 - Column	PP or PVDF	PP or PVDF

Vertical Centrifugal Pumps

- Centrifugal monoblock pump.
- Materials available: PP, PVDF.
- Max flow: 40 m³/h;
- Max head: 22 mlc.
- Temperature: PP: max 70 °C; PVDF: max 90 °C.
- Suitable for high corrosive liquids containing solids in suspension.
- Length of the column: from 500 to 1000 mm.

Standard:

- Threaded in and out connections.

Optional:

- Dry-running protection.
- Flanges available.
- Suction strainer.

Performance Curves 50 Hz – 2900 RPM

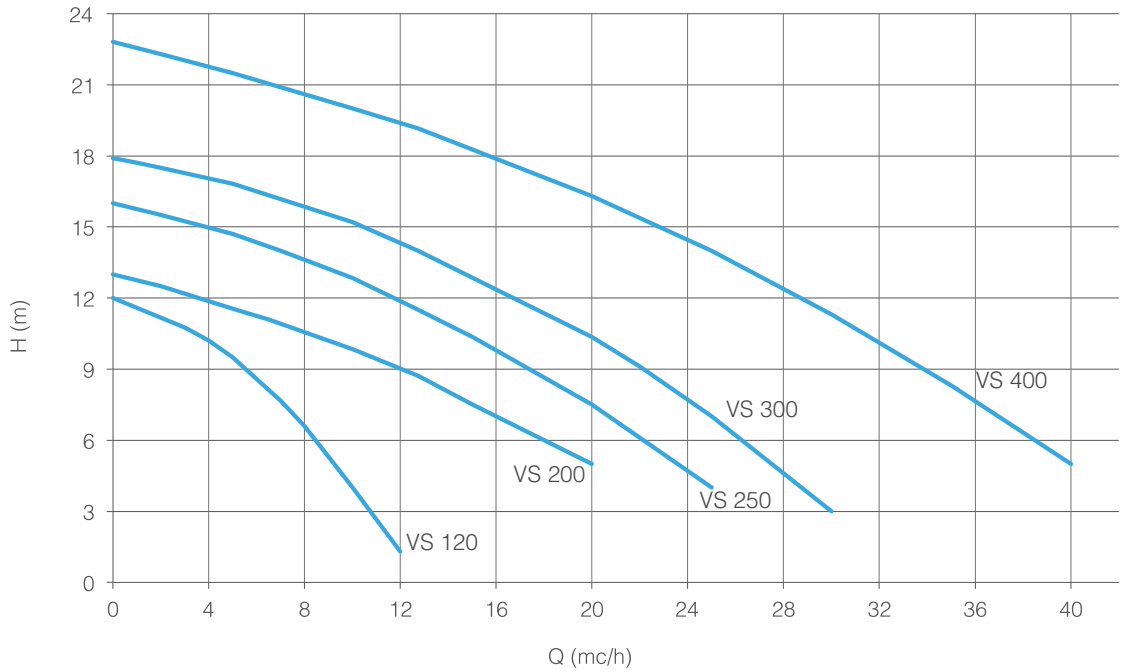

Vertical Centrifugal Pumps

- Centrifugal pump with coupling.
- Materials available: PP, PVDF.
- Max flow: 57 m³/h; Max head: 39 mlc.
- Temperature: PP: max 70 °C;
  PVDF: max 90 °C.
- Suitable for high corrosive liquids containing solids in suspension.
- Length of the column: from 500 to 2000 mm.

Standard:

- Threaded in and out connections.

Optional:

- Dry-running protection.
- Flanges available.
- Suction strainer.

Performance Curves 50 Hz – 2900 RPM

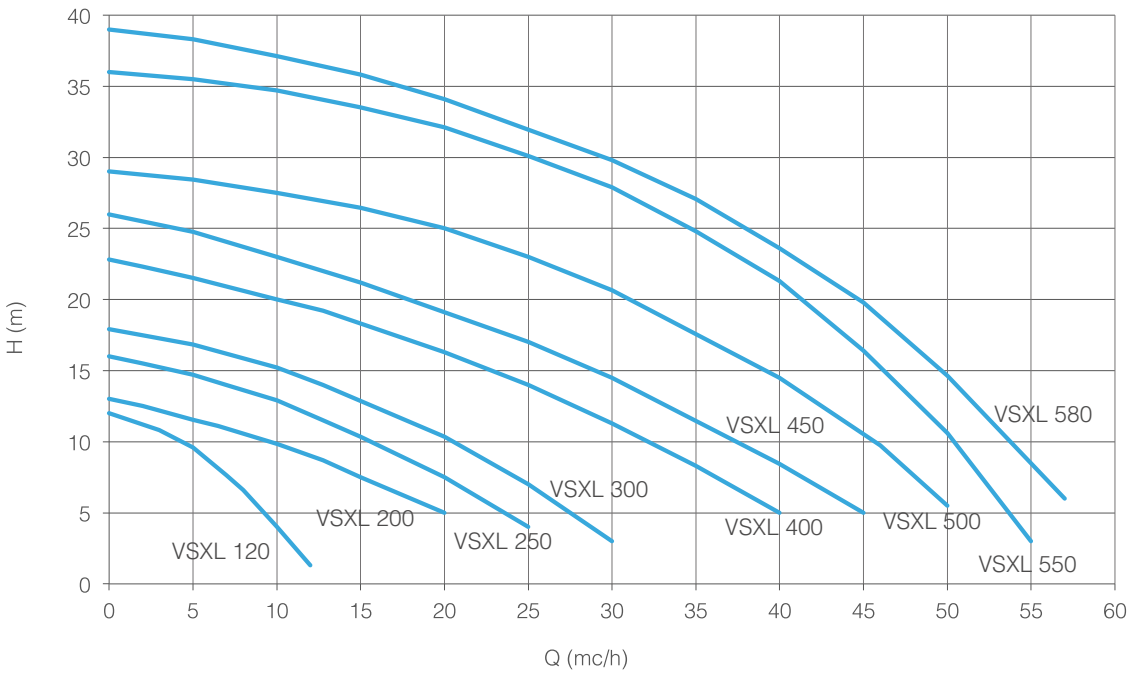

Vertical Mag Drive Centrifugal Pumps

Main Features

Vertical mag drive centrifugal pumps series MG-V are made of thermoplastic materials (Polypropylene and PVDF) and are suitable to handle chemicals and corrosive liquids. This kind of pump has been designed for a vertical submerged installation, providing high reliability for intank and sump applications. MG-V are sealless magnetic drive pumps without any kind of labyrinth or mechanical seal. The column of the pump is hermetically sealed and it allows complete isolation of the motor, the extension shaft and external magnet of the pump from the process liquid.

- Materials available: PP /PVDF.
- Materials in contact with the liquid:
  Casing and impeller: PP/PVDF;
  O-Ring: EPDM (standard for PP pumps);
  VITON (standard for PVDF pumps);
  Shaft: Al_2O_3 99,7%;
  Bushing: PTFEC.
- Max flow: 22 m^3/h.
- Max head 20 mlc.
- Temperature: PP: max 70 °C
  PVDF: max 90 °C.
- Compact design.
- Column length: 320 mm.

Optional:

- Dry running protection.
- Also available with bracket suitable for NEMA motors.

Performance Curves 50 Hz – 2900 RPM

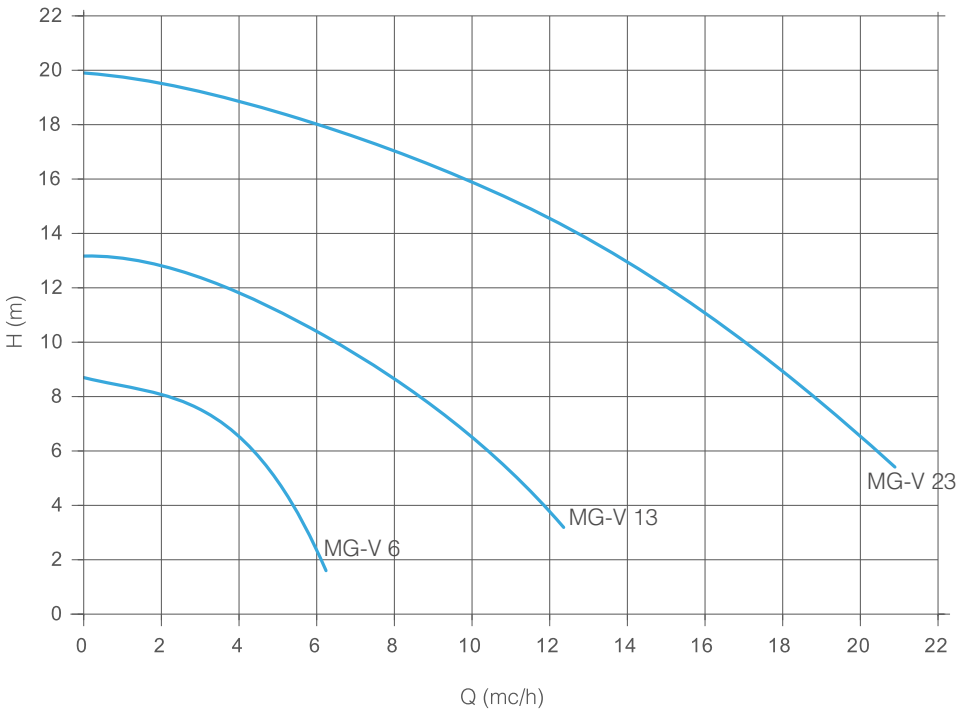

Centrifugal Vertical Cantilever Pumps

Features

- Materials available: AISI 316 or Titanium.
- Max flow: 24 m^3/h.
- Max head: 26 mlc.
- Fume labyrinth seal. A combined system of labyrinth, rings and PTFE lip seal guarantees tightness against gas and vapours.
- Impeller with low axial thrust.
- Suitable for corrosive liquids containing solids.
- Especially designed for use in the production of printed circuit boards (PCB). AISI 316 version is suitable for potassium permanganate applications at 90 °C.
- Titanium version is suitable for “Black Oxide”.
- Two different types available: VS-SS 1 for tank transfer and VS-SS 2 used as a boosting pump. VS-SS 2 model should be installed in the same tank where VS-SS 1. This provides a tight system which prevents any leaks.

Performance Curves 50 Hz – 2900 RPM

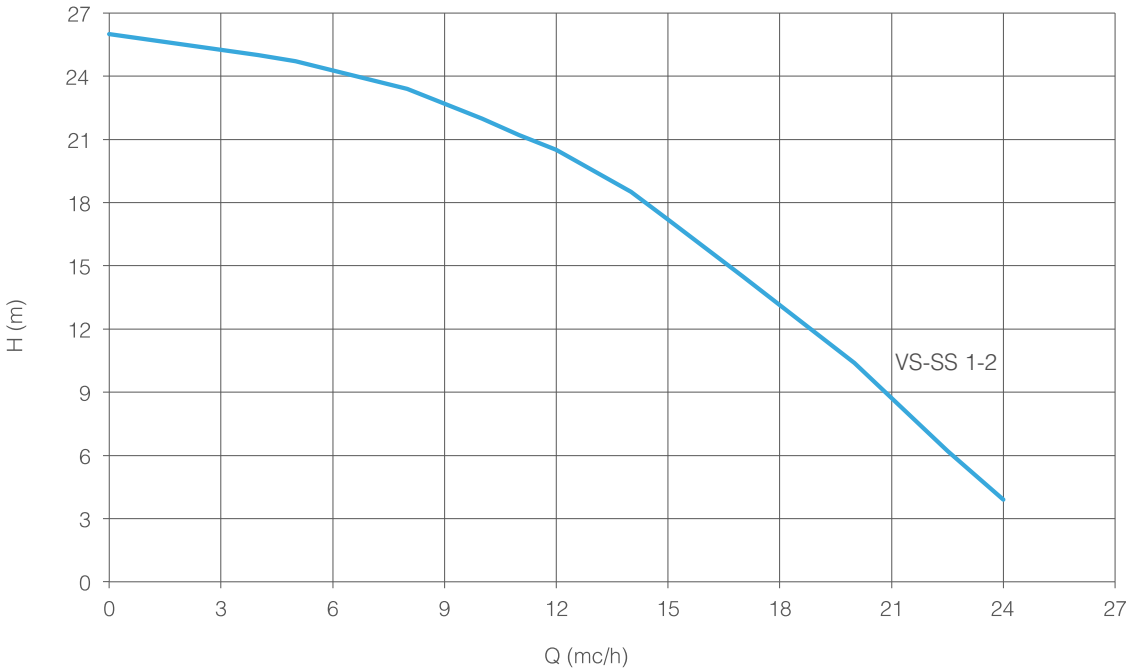

Atex Pumps

For pumping applications in potentially explosive atmospheres Mangeto offers ATEX certified pumps suitable for zone 1 II 2G c Tx and zone 2 II 3G c Tx.

All our Atex pumps comply with the technical and safety requirements of ATEX directive 2014/34/EU.

The Atex Pumps Available

Only for ATEX zone 2.
(See pumps model MG PP/PVDF, MGT and MGP)

For Atex zone 1 and 2.
(See pump model MG SS316)

For Atex zone 1 and 2.
(See pump model MGT-SS)

For Atex zone 1 and 2.
(See pump model MGP-S)

Accessories

Dry-Running Protection

The installation of W 01 Emirel prevents expensive damage to pumps because it avoids the dryrunning working, the closed discharge and the blocked suction. We recommend the use of this instrument to unload tank truck or every other application when it's not certain if the liquid is constantly present in the pipes. This device checks constantly the active power of the motor, that is the medium value of the instantaneous power absorbed by the pump, through the reception of information about the voltage and about the voltage variations. Through a set point and a timer, which are adjustable, it's possible to set the minimum power and the triggering time of the device.

If the power goes under the established value, the pump stops and the device must be switched on again manually.

In case of continuous intervention on the apparatus, check the presence of liquid and/or the correct functioning of the plant to find the cause of working of the device.

Flanges

Mangeto pumps are usually supplied with threaded connections. Upon request we can also supply DIN or ANSI flanges for thermoplastic pumps (flat stub + free flange) and welded DIN or ANSI flanges for AISI316 pumps.

EKİN ENDÜSTRİYEL

DOSING
PUMPS

FLUID TRANSFER PRODUCTS

Solenoid Dosing Pumps

Dosing pumps, acid, chlorine, liquid fertilizer, etc, they are precision transfer devices designed to be used in places where chemicals should be given at certain rates.

OLIMPIA SERIES

Analog type with on-off button, manual capacity adjustment from 0-100%, PVDF dosing head, external protection made of PP material resistant to heat and acidic environments. IP65 protection class, PTFE (teflon) diaphragm, ceramic ball check valve. Level sensor input. (Level sensor is optional.) As standard 220V AC single-phase supply. Optionally available in 24 VDC. Suitable for wall mounting.

PVDF Dosing Head			Connections (mm) in /out	Stroke / Min.	Consuption	Power Supply
Flow Rate (lt/h)	Pressure (bar)	CC / Stroke				
5	5	0,60	4/6	140	14 W	100÷240VAC 50/60HZ - 24VAC
2	7	0,60	4/6	100	14 W	100÷240VAC 50/60HZ - 24VAC
0,6	7	0,60	4/6	100	14 W	100÷240VAC 50/60HZ - 24VAC

HYDRA SERIES

There are varieties with different features in the series. Analog and digital options are available. Digital options also include pH / ORP controlled options. It is suitable for flow adjustment between 0-100%. All types have PVDF dosing heads. The outer protection is made of PP material which is resistant to heat and acidic environments. IP65 protection class, PTFE (Teflon) diaphragm, Ceramic check valve. 220V AC single phase supply as standard. Suitable for wall mounting.

HYDRA SERIES MODELS

Hydra BX: Analog type. It has a standard analog dosage feature.

Hydra BL: Analog type. It has the ability to make 2 different flow settings as 0-20% and 0-100%. Level sensor input (Level sensor is optional.).

Hydra BC: Analog type. It has proportional dosing with flow meter or manual dosing between 0-100%. Level sensor input. (Level sensor is optional.)

Hydra MA: Analog type. It has the ability to dosing by receiving 4-20 mA signal or manual dosing between 0-100%. Level sensor input. (Level sensor is optional.)

Hydra MT: Digital type. Anologous signal-dependent dosing (0 / 4-20mA - 20-4mA), Pulse-dependent automatic dosing 1: n, n: 1, 1: c, daily or weekly programmability, (max. 10) periodic dosing, level float input (Level sensor is optional.), Flow sensor input, ability to display dosing data, 5 language options, password protection to prevent unauthorized use.

Hydra PR: Digital type. pH / ORP sensor with BNC input, periodic dosing feature, level float input, (Level sensor optional) PT100 temperature sensor input, (optional) with flow sensor input, remote control, (On-Off) dosing data display feature, 16-digit light LCD screen, 5 language options, password, unauthorized use has the ability to prevent.

PVDF Dosing Head			Connections (mm) in /out	Stroke / Min.	Consuption	Power Supply
Flow Rate (lt/h)	Pressure (bar)	CC / Stroke				
5	8	0,52	4/6	160	14 W	100÷240VAC 50/60HZ - 24VAC
3	10	0,31	4/6	160	14 W	100÷240VAC 50/60HZ - 24VAC

ATHENA SERIES

There are varieties with different features in the series. Analog and digital options are available. The control sections of all models are protected by a transparent protective cover. Digital options also include pH / ORP controlled options. It is suitable for flow adjustment between 0-100%. All types have PVDF dosing heads. The outer protection is made of PP material which is resistant to heat and acidic environments. IP65 protection class, PTFE (Teflon) diaphragm, Ceramic check valve. 220 VAC single phase supply as standard. Suitable for wall mounting.

4 different sizes of pumps are available, each size has different flow rates in itself.

ATHENA SERIES MODELS

Athena BX: Analogue type. Double flow adjustment between 0-20% and 0-100% is available.

Athena BL: Analogue type. It has the ability to make 2 different flow settings as 0-20% and 0-100%. Level sensor input (Level sensor is optional.).

Athena AM: Analogue type. It has the ability to dosing by receiving 4-20 mA signal or manual dosing between 0-100%. Level sensor input. (Level sensor is optional.)

Athena MT: Digital type. Anologous signal dependent dosing, (0 / 4-20mA - 20-4mA) pulse-dependent automatic dosing 1: n, n: 1, 1: c, level float input, (Level sensor optional.) Flow sensor input, ability to display dosing data It has 5 language options, features to prevent unauthorized use by password.

Athena BT: Digital type. Daily or weekly programmable (max. 10) periodic dosing.

Athena PR: Digital type. pH / ORP sensor with BNC input, periodic dosing feature, level float input, (Level sensor optional) PT100 temperature sensor input, (optional) with flow sensor input, remote control, (On-Off) dosing data display feature, 16-digit light LCD screen, 5 language options, password, unauthorized use has the ability to prevent.

ATHENA 1						
Flow Rate	Pressure	CC / Stroke	Connections (mm) in /out	Stroke / Min.	Consuption	Weight
2,5 l/h	20 bar	0,35	4x6 / 4x7	120	14 Watt	3 kg
3 l/h	18 bar	0,42	4x6 / 4x7	120	14 Watt	3 kg
4,2 l/h	14 bar	0,58	4x6 / 4x7	120	14 Watt	3 kg

ATHENA 2						
Flow Rate	Pressure	CC / Stroke	Connections (mm) in /out	Stroke / Min.	Consuption	Weight
3 l/h	12 bar	0,31	4x6	160	14 Watt	3 kg
4 l/h	10 bar	0,42	4x6	160	14 Watt	3 kg
5 l/h	8 bar	0,52	4x6	160	14 Watt	3 kg
8 l/h	2 bar	0,83	4x6	160	14 Watt	3 kg

ATHENA 3						
Flow Rate	Pressure	CC / Stroke	Connections (mm) in /out	Stroke / Min.	Consuption	Weight
7 l/h	16 bar	0,39	4x6	300	28 Watt	4 kg
10 l/h	10 bar	0,55	4x6	300	28 Watt	4 kg
14 l/h	6 bar	0,78	4x6	300	28 Watt	4 kg
16 l/h	2 bar	0,89	4x6	300	28 Watt	4 kg

ATHENA 4						
Flow Rate	Pressure	CC / Stroke	Connections (mm) in /out	Stroke / Min.	Consuption	Weight
30 l/h	5 bar	1,67	8 / 6 mm	300	40 Watt	4 kg
40 l/h	4 bar	2,22	8 / 6 mm	300	40 Watt	4 kg
55 l/h	2 bar	3,05	8 / 6 mm	300	40 Watt	4 kg
110 l/h	0,1 bar	6,11	8 / 6 mm	300	40 Watt	4 kg

Mechanical Diaphragm Dosing Pumps

Taurus series mechanical diaphragm pumps have different capacities between 5.5 and 500 l / h. It has an outlet pressure of 5-10 bar (varies according to the selected model). It operates with standard three-phase 380V energy.

Flow adjustment up to 20% can be made manually with the adjustment lever on the back of the pumps. Body material is aluminum. According to the chemicals to be used PP, PVC, PVDF and SS316 quality has different head materials. It has a standard Teflon (PTFE) diaphragm.

Optionally, an internal inverter or 4-20 mA output can be added to the motor.

Mechanical Diaphgram Dosing Pump

Piston Type Dosing Pump

TM.2 - 4 - 6 DIAPHGRAM VERSION								
Model	Ø Diaphragm	Stroke / mm	Stroke / Min.	Flow Rate	Pressure	Connection	Weight	
							SS316	PVC/PP/ PVDF
THREEPHASE 0,18 kW - MONOFASE 0,25 kW								
TM02064A	64 mm	2 mm	58	5,5 l/h	10 bar	1/4" g.f.	10,2 kg	8,5 kg
TM02064B	64 mm	2 mm	78	8,0 l/h	10 bar	1/4" g.f.	10,2 kg	8,5 kg
TM02064C	64 mm	2 mm	116	11,0 l/h	10 bar	1/4" g.f.	10,2 kg	8,5 kg
THREEPHASE 0,25 kW - MONOFASE 0,37 kW								
TM02094A	94 mm	2 mm	58	20,0 l/h	10 bar	3/8" g.f.	10,7 kg	8,4 kg
TM02094B	94 mm	2 mm	78	26,0 l/h	10 bar	3/8" g.f.	10,7 kg	8,4 kg
TM02094C	94 mm	2 mm	116	40,0 l/h	10 bar	3/8" g.f.	10,7 kg	8,4 kg
THREEPHASE 0,37 kW - MONOFASE 0,55 kW								
TM04108A	108 mm	4 mm	58	60,0 l/h	10 bar	3/8" g.f.	13,3 kg	10,1 kg
TM04108B	108 mm	4 mm	78	80,0 l/h	10 bar	3/8" g.f.	13,3 kg	10,1 kg
TM04108C	108 mm	4 mm	116	120,0 l/h	10 bar	3/8" g.f.	13,3 kg	10,1 kg
TM06138A	138 mm	6 mm	58	155,0 l/h	7 bar	3/4" g.f.	18,4 kg	12,3 kg
TM06138B	138 mm	6 mm	78	220,0 l/h	7 bar	3/4" g.f.	18,4 kg	12,3 kg
TM06138C	138 mm	6 mm	116	310,0 l/h	7 bar	1" g.f.	18,4 kg	12,3 kg
TM06165A	165 mm	6 mm	58	230,0 l/h	5 bar	1" g.f.	22,0 kg	13,2 kg
TM06165B	165 mm	6 mm	78	330,0 l/h	5 bar	1" g.f.	22,0 kg	13,2 kg
TM06165C	165 mm	6 mm	116	460,0 l/h	5 bar	1" g.f.	22,0 kg	13,2 kg

Piston Type Dosing Pump

Taurus series mechanical diaphragm pumps have different capacities between 40 and 1000 l / h. It has an outlet pressure of 5-20 bar (varies depending on the model selected). It operates with standard three-phase 380V energy.

Flow adjustment up to 20% can be made manually with the adjustment lever on the back of the pumps. Body material is aluminum. It has different head materials in PVC and SS316 quality according to the chemicals to be used. Piston material is SS316 or ceramic.

Optionally, an internal inverter or equipment capable of delivering 4-20 mA output can be added on the motor.

TP 25 PISTON VERSION								
Model	Ø Piston	Stroke / Min.	Flow Rate	Pressure		Connection	Weight	
				SS316	PVC		SS316	PVC
THREEPHASE 0,18 kW - MONOFASE 0,25 kW								
TP25025A	25 mm	58	40,0 l/h	20 bar	10 bar	3/8" g.f.	15,5 kg	14,1 kg
TP25025C	25 mm	116	80,0 l/h	20 bar	10 bar	3/8" g.f.	15,5 kg	14,1 kg
TP25030A	30 mm	58	55,0 l/h	20 bar	10 bar	3/8" g.f.	15,5 kg	14,1 kg
TP25030C	30 mm	116	112,0 l/h	20 bar	10 bar	3/8" g.f.	15,5 kg	14,1 kg
THREEPHASE 0,37 kW - MONOFASE 0,55 kW								
TP25038A	38 mm	58	90,0 l/h	20 bar	10 bar	1/2" g.f.	18,4 kg	15,6 kg
TP25038C	38 mm	116	180,0 l/h	20 bar	10 bar	1/2" g.f.	18,4 kg	15,6 kg
THREEPHASE 0,55 kW - MONOFASE 0,75 kW								
TP25048A	48 mm	58	140,0 l/h	20 bar	10 bar	1/2" g.f.	18,4 kg	15,6 kg
TP25048C	48 mm	116	284,0 l/h	20 bar	10 bar	1/2" g.f.	18,4 kg	15,6 kg
TP25054A	54 mm	58	180,0 l/h	15 bar	10 bar	1/2" g.f.	20,2 kg	15,6 kg
TP25054C	54 mm	116	365,0 l/h	15 bar	10 bar	1/2" g.f.	20,2 kg	15,6 kg
THREEPHASE 0,55 kW - MONOFASE 0,75 kW								
TP25064A	64 mm	58	250,0 l/h	10 bar	10 bar	3/4" g.f.	21,3 kg	16,1 kg
TP25064C	64 mm	116	505,0 l/h	10 bar	10 bar	3/4" g.f.	21,3 kg	16,1 kg
TP25076A	76 mm	58	365,0 l/h	7 bar	7 bar	1" g.f.	28,2 kg	18,2 kg
TP25076C	76 mm	116	730,0 l/h	7 bar	7 bar	1" g.f.	28,2 kg	18,2 kg
TP25089A	89 mm	58	495,0 l/h	5 bar	5 bar	1" g.f.	30,4 kg	18,6 kg
TP25089C	89 mm	116	1000,0 l/h	5 bar	5 bar	1" g.f.	30,4 kg	18,6 kg

Measurement Control Devices

Nexus series measuring instruments pH, redox, (ORP) Oxygen, free chlorine, turbidity and conductivity are available in many varieties.

The wall type has different models that can be installed inside and outside the panel. It can output 4-20 mA signal. Suitable for operation with 100-240 VAC 50/60 Hz energy.

EKİN ENDÜSTRİYEL

AIR DIAPHRAGM **PUMP**

FLUID TRANSFER PRODUCTS

MIT Diaphragm Transfer Pumps

Diaphragm pumps which work with air can be used in various areas in industrial works. It works as the same principle with lift and force pumps. Diaphragm pumps works with air instead of electricity motors with help of a compression motor that supplies demand of the pumps air according to its own flow rate and pressure values.

Due to pumps non-electric motor it has an ex-proof feature. For this reason this pump can serve under oil, solvent and many other flammable material containing work spaces. Besides having deep vacuum and dry working features this pumps flow rate and pressure can be easily adjustable.

Considering all these reasons air working pumps can serve at various areas of industry like transfer, circulation, injection, filling.

MIT 160 Series Diaphragm Pumps

MIT ac diaphragm transfer pumps have muttiple applications which give opportunity to be used at high flow rated and parti-culated fluids. With differing diaphragm adjustments according to flows MIT air diaphragm transfer pumps offers a longer life-time.

MIT 160 (1/4") Plastic Pump

Areas of Usage

MIT diaphragm pumps can easily transfer the fluid with connecting to the bottom of the tank.

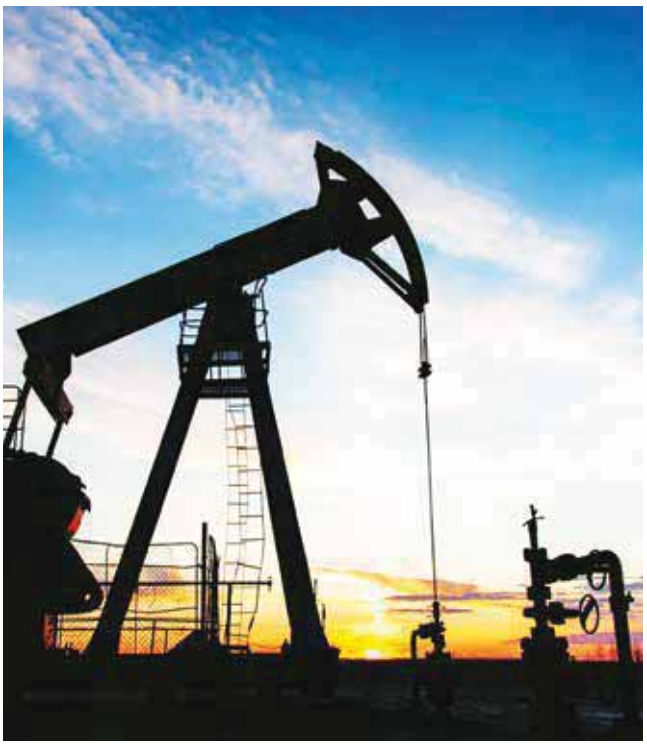

TECHNICAL FEATURES	
Flow	16 l/min.
Pump Inlet-Outlet	1/4"
Operating Pressure (max.)	7 bar
Head (max.)	70 m
Sucking	6 m
Operating Temperature	0 ~ +100 °C
Air Inlet	1/4"
Particle Permeability	1 mm
Weight	1,5 kg

MATERIAL FEATURES	
Body	Polipropilen (PP)
	PVDF
Diaphragms	Santopren
	Teflon
	EPDM
	Viton
	Buna-N
	Neopren

MIT 160 (1/4") Plastic Pumps Per. Curve

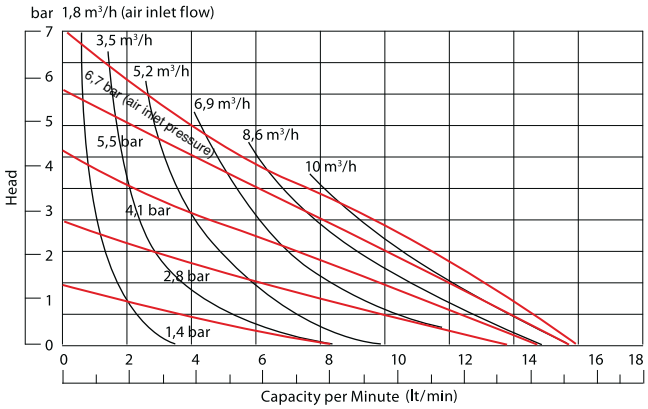

MIT 550 Series Diaphragm Pumps

MIT 550 series offers the user to choose the most effective application for various chemicals with and aluminum body.

MIT 550 (3/4") Metal Pump

MIT 550 (3/4") Plastic Pump

Areas of Usage

MIT diaphragm pumps can also be used as submerged pumps. To do this, air release pipe should go above the water level to keep pumps exhaust for releasing the air.

TECHNICAL FEATURES		
	Plastic Body	Metal Frame
Flow	55 l/min.	55 l/min.
Pump Inlet-Outlet	3/4"	3/4"
Operating Pressure (max.)	7 bar	7 bar
Head (max.)	70 m	70 m
Sucking	6 m	6 m
Operating Temperature	0 ~ +100 °C	-18 ~ +100 °C
Air Inlet	1/4"	1/4"
Particle Permeability	3 mm	3 mm
Weight	4,2 kg	4,9 kg

MATERIAL FEATURES	
Metal Body	Aluminum
	Stainless Casting
	Hair Stainless
	Ductile Iron
Plastic Body	Polypropylene (PP)
	Polyvinyldifluoride (PVDF)
	30% Glass Fiber Additive
Diaphragms	Santoprene
	Teflon
	EPDM
	Viton
	Buna-N
	Neoprene

MIT 550 (3/4") Plastic and Metal Pumps Performance Curve

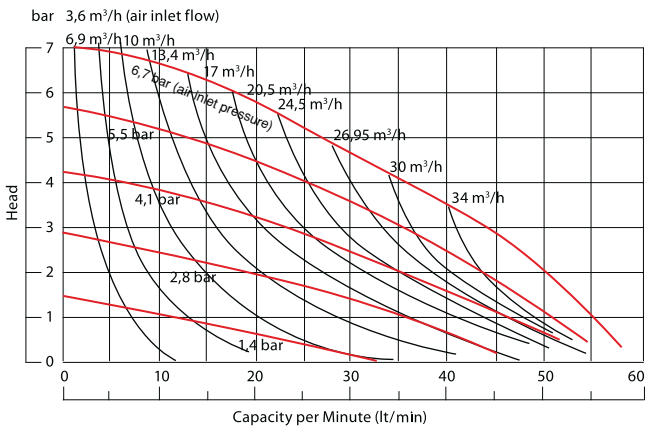

MIT 1500 Series Diaphragm Pumps

MIT air diaphragm pumps are commonly used at marine industry. Bilge water discharge, sanding, scrape and rusted wastes are also in the line of work of this pump. Air diaphragm pumps are also used at transferring and storing most of the chemicals which used at dye houses and press machines paint circulations which used at textile industry. With the color and press capacity of the machine a different pump can be used for every color.

MIT 1500 (1") Metal Pump

MIT 1500 (1") Plastic Pump

TECHNICAL FEATURES		
	Plastic Body	Metal Body
Flow	150 l/min.	150 l/min.
Pump Inlet-Outlet	1"	1"
Operating Pressure (max.)	7 bar	7 bar
Head (max.)	70 m	70 m
Sucking	6 m	6 m
Operating Temperature	0 ~ +100 °C	-18 ~ +100 °C
Air Inlet	1/2"	1/2"
Particle Permeability	4 mm	4 mm
Weight	8 kg	9 kg

MATERIAL FEATURES	
Metal Body	Aluminum
	Stainless Casting
	Hair Stainless
	Ductile Iron
Plastic Body	Polypropylene (PP)
	Polyvinyldifluoride (PVDF)
	30% Glass Fiber Additive
Diaphragms	Polypropylene (PB)
	Teflon
	EPDM
	Viton
	Buna-N
	Neopren

MIT 1500 (1") Plastic and Metal Pumps Performance Curve

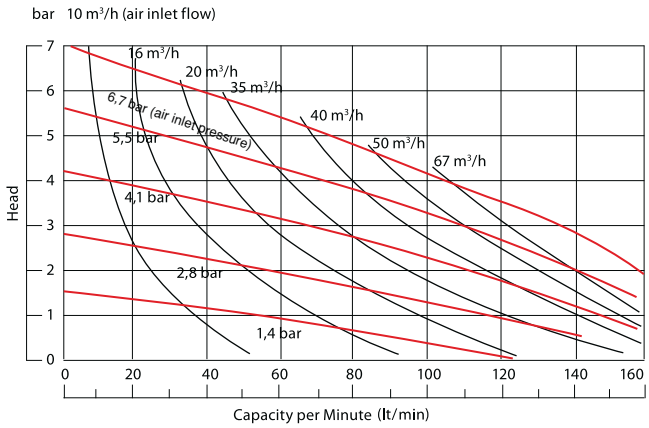

MIT 4000 Series Diapham Pumps

MIT air diaphragm pumps are very useful at cleaning oil and sludge which occurred at storage basins of petrol products. These pumps can be used for any type of chemical, glue, solvents, paint or inks transfer and circulation. A MIT air diaphragm pump doesn't require any electrical engine due to this reason it has a resistance to explosion and combustion which called the Ex-proof feature. It can be used in transferring and storing paint and glue materials. For water based fluids nitrile caoutchouc diaphragm can be used and for solvent based fluids PTFE diaphragm can be used.

MIT 4000 (1 1/2") Metal Pump

MIT 4000 (1 1/2") Plastic and Metal Pumps Performance Curve

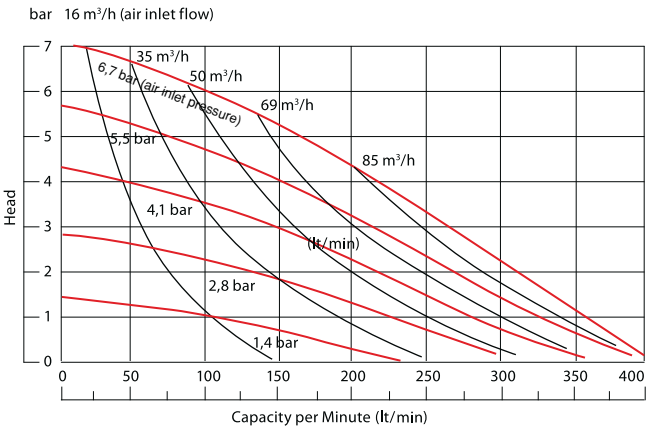

TECHNICAL FEATURES		
	Plastic Body	Metal Body
Flow	400 l/min.	400 l/min.
Pump Inlet-Outlet	1 1/2"	1 1/2"
Operating Pressure (max.)	7 bar	7 bar
Head (max.)	70 m	70 m
Sucking	6 m	6 m
Operating Temperature	0 ~ +100 °C	-18 ~ +100 °C
Air Inlet	3/4"	3/4"
Particle Permeability	6 mm	6 mm
Weight	20,5 kg	25 kg

MATERIAL FEATURES	
Metal Body	Aluminum
	Stainless Casting
	Hair Stainless
	Ductile Iron
Plastic Body	Polypropylene (PP)
	Polyvinyldifluoride (PVDF)
	30% Glass Fiber Additive
Diaphragms	Santoprene
	Teflon
	EPDM
	Viton
	Buna-N
	Neoprene

MIT 4000 (1 1/2") Plastic Pump

MIT 5600 Series Diapham Pumps

MIT air diaphragm pumps are used in transferring acid and chemical based sludge and dewatering sedimentation sludge with pressing it to filter at water treatment plants. Transferring animal based waste in slaughtering facilities, storing and bottling process at fish oil industry can be referred work areas of MIT air diaphragm pumps.

MIT 5600 (2") Metal Pump

MIT 5600 (2") Plastic and Metal Pumps Performance Curve

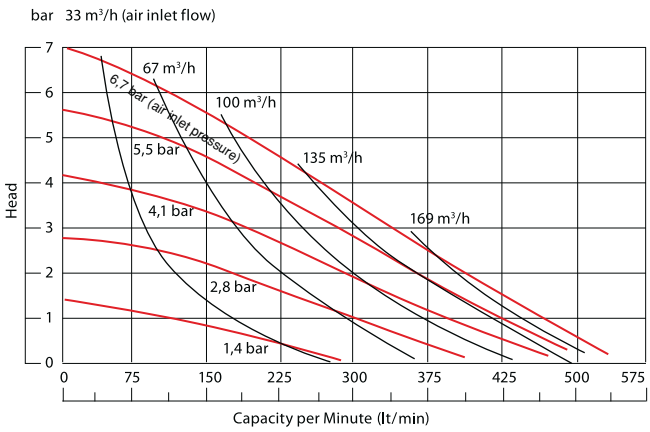

TECHNICAL FEATURES		
	Plastic Body	Metal Body
Flow	560 l/min.	560 l/min.
Pump Inlet-Outlet	2"	2"
Operating Pressure (max.)	7 bar	7 bar
Head (max.)	70 m	70 m
Sucking	6 m	6 m
Operating Temperature	-18 ~ +100 °C	-18 ~ +100 °C
Air Inlet	3/4"	3/4"
Particle Permeability	6 mm	6 mm
Weight	30 kg	32 kg

MATERIAL FEATURES	
Metal Body	Aluminum
	Stainless Casting
	Hair Stainless
	Ductile Iron
Plastic Body	Polypropylene (PP)
	Polyvinyldifluoride (PVDF)
	30% Glass Fiber Additive
Diaphragms	Santoprene
	Teflon
	EPDM
	Viton
	Buna-N
	Neoprene

MIT 5600 (2") Plastic Pump

MIT 8900 Series Diaphragm Pumps

MIT air diaphragm pumps are used in ceramic industry for transferring sludge and mold filling purpose. Beside this it can also be used at sealing sector with circulation and spraying purpose.

MIT 8900 (3") Metal Pump

MIT 8900 (3") Plastic Pump

TECHNICAL FEATURES		
	Plastic Body	Metal Body
Flow	890 l/min.	890 l/min.
Pump Inlet-Outlet	3"	3"
Operating Pressure (max.)	7 bar	7 bar
Head (max.)	70 m	70 m
Sucking	6 m	6 m
Operating Temperature	-18 ~ +100 °C	-18 ~ +100 °C
Air Inlet	3/4"	3/4"
Particle Permeability	6 mm	6 mm
Weight	49 kg	51 kg

MATERIAL FEATURES	
Metal Body	Aluminum
	Stainless Casting
	Hair Stainless
	Ductile Iron
Plastic Body	Polypropylene (PP)
	Polyvinyldifluoride (PVDF)
	30% Glass Fiber Additive
Diaphragms	Santoprene
	Teflon
	EPDM
	Viton
	Buna-N
	Neoprene

MIT 8900 (3") Plastic and Metal Pumps Performance Curve

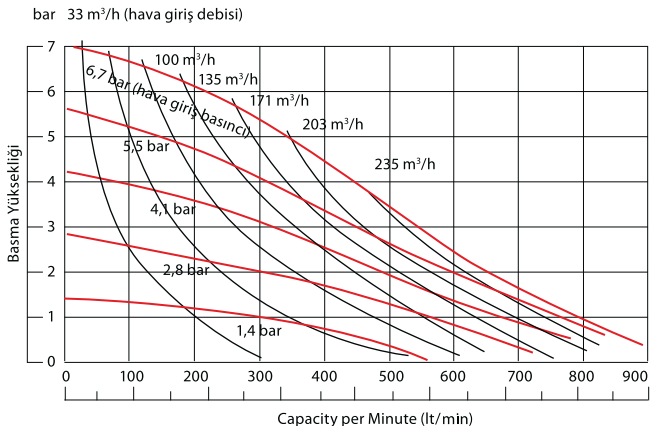

MIT Hj Series Diaphragm Pumps

MIT HJ Series hygienic pumps are used in industries like food, pharmaceutical and cosmetics. Clamp type connection is used. 316 L stainless steel is used for frame material.

MIT HJ Series hygienic pumps does not thins the fluid its transferring and not effecting the chemical state of the fluid makes this pumps indispensable for transferring and storing milk, yogurt, cream, mustard, ketchup, mayo type of sensitive materials.

For transferring concentrated materials as chocolate, marmalade, air transfer pumps are suitable which are designed based on food regulations.

MATERIAL FEATURES	
Body	SS 316 L
Diaphragms	Santoprene
	Teflon
	EPDM
	Neoprene

TECHNICAL FEATURES										
Model		Flow (lt/min)	Pump Inlet-Outlet (inch)	Operating Pressure (max.bar)	Head (max.m)	Sucking (m)	Operating Temperature °C	Air Inlet	Particle Permeabilit (mm)	Weight (kg)
MIT HJ 550	3/4"	55	3/4"	7	70	6	-18 ~ +100	1/4"	3	6,5
MIT HJ 1500	1"	150	1"	7	70	6	-18 ~ +100	1/2"	4	12,0
MIT HJ 4000	1 1/2"	400	1 1/2"	7	70	6	-18 ~ +100	3/4"	6	26,0
MIT HJ 5600	2"	560	2"	7	70	6	-18 ~ +100	3/4"	6	31,0
MIT HJ 8900	3"	890	3"	7	70	6	-18 ~ +100	3/4"	8	65,0

Ruby Air Operated Diaphragm Pumps

TÜV NORD
TÜV NORD CERT Gmbh
ISO 9001

Ex II 2 GD c IIB T4
Baseefa15ATEX13DR

CE

Ruby Air Operated Diaphragm Pumps

New pump line with a brand new designing that offers reinforced pumping potentials. The updated designing provides the possibility to use also other materials at the hydraulic parts without decreasing the efficiency in pressure. Plus, it offers even bigger performance provided with economy.

Ruby Pumps composition codes

Pump Model	Body	Center Block	Diaphragms	Valve Seats	Balls	O-Ring	Twin Manifold
Ruby 015	P: PP	P: PP	N: NBR Conductive	N: NBR	N: NBR	N=NBR	D: Twin
Ruby 020	V: PVDF+CF	A: Aluminium	E: EPDM Conductive	E: EPDM	E: EPDM	F=FKM	Manifold
Ruby 025	A: Aluminium	AN: Alu/Nickel	T: TFM+(EPDM Conductive)	T: PTFE	T: PTFE	T=PTFE	
Ruby 040	S: AISI 316	Plated	Z: TFM-A+(EPDM Conductive)	A: Aluminium	S: AISI 316	E=EPDM	
Ruby 050	PC: PP+CF	PC: PP+CF	ST: PTFE+SANTOPRENE (Backup)	V: PVDF			
Ruby 051	SL: AISI 316		HY: PTFE + HYTREL (Backup)	S: AISI 316			
Ruby 080	Electropolished			P: PP			
Ruby 081							

Main Features

Available in PP, PVDF, ALUMINIUM and AISI 316 STAINLESS STEEL

- Use in potentially explosive atmospheres (conductive series)

Ex II 2 GD c IIB T4
Baseefa15ATEX13DR

- High efficciency degree
- Economical air consumption, ecological designing
- Pressure / capacity high efficciency
- Oil free operation
- Very low level of icebarriers, up to zero in high wear outs
- New air valve designing, fully controled air passage, with the potential to use additional ice barrier protectives.
- Easy disassembling and re-assembling
- Easy trasportation
- New generation diaphragms with embodied inner / outer piston
- New generation PTFE diaphragms of embodied type for long-life operation (compound)
- Potential to be submersible
- Possibility to be used in dirty environments due to their closed designing
- Easy entrance orientation changing (manifold reverse)
- Automatic suction

How it Works

The Ruby diaphragm pump is an air-operated, positive displacement, self-priming pump. These drawings show flow pattern through the pump upon it's initial stroke. It is assumed the pump has no fluid in it, prior to it's nitial stroke.

Right Stroke

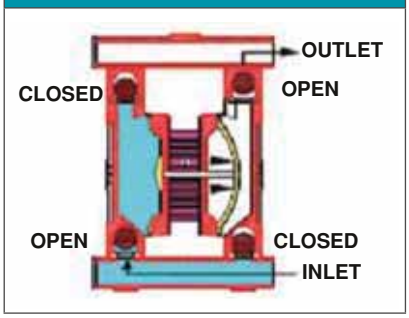

FIGURE 1 The air valve directs pressurized air to the back side of diaphragm A. The compressed air is applied directly to the liquid column separated by elastomeric diaphragms. The diaphragm acts as a separation membrane between the compressed air and liquid, balancing the load and removing mechanical stress from the diaphragm. The compressed air moves the diaphragm away from the center block of the pump. The opposite diaphragm is pulled in by the sha connected to the pressurized diaphragm. Diaphragm B is on it's suction stroke; air behind the diaphragm has been forced out to the atmosphere through the exhaust port of the pump. The movement of diaphragm B toward the center block of the pump creates a vaccuum within chamber B. Atmospheric pressure forces fluid into the inlet manifold forcing the inlet valve ball off its seat. Liquid is free to move past the inlet valve ball and fill the liquid chamber (see shaded area).

Mid Stroke

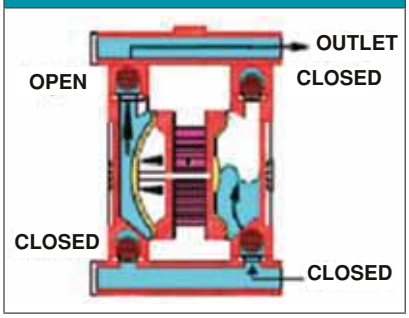

FIGURE 2 When the pressurized diaphragm, diaphragm A, reaches the limit of it's discharge stroke, the air valve redirects pressurized air to the back side of diaphragm B. The pressurized air forces diaphragm B away from the center block while pulling diaphragm A to the center block. Diaphragm B is now on its discharge stroke. Diaphragm B forces the inlet valve ball onto its seat due to the hydraulic forces developed in the liquid chamber and manifold of the pump. These same hydraulic forces li the discharge valve ball off it's seat, while the opposite discharge valve ball is forced onto it's seat, forcing fluid to flow through the pump discharge. The movement of diaphragm A toward the center block of the pump creates a vaccuum within liquid chamber A. Atmospheric pressure forces fluid into the inlet manifold of the pump. The inlet valve ball is forced off it's seat allowing the fluid being pumped to fill the liquid chamber.

Left Stroke

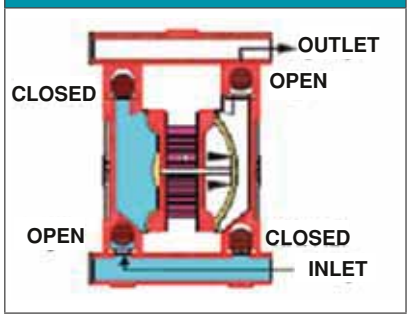

FIGURE 3 At completion of the stroke, the air valve again redirects air to the back side of diaphragm A, which starts diaphragm B on its exhaust stroke. As the pump reaches it's original starting point, each diaphragm has gone through one exhaust and one discharge stroke. This constitutes one complete pumping cycle. The pump may take several cycles to completely prime depending on the conditions of the application.

Installation

Drum Transfer

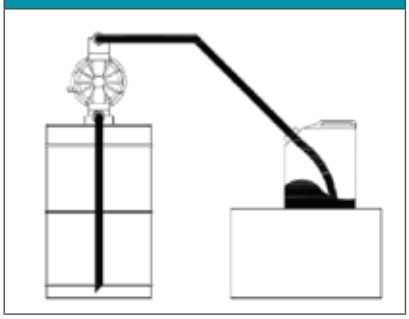

Self Priming

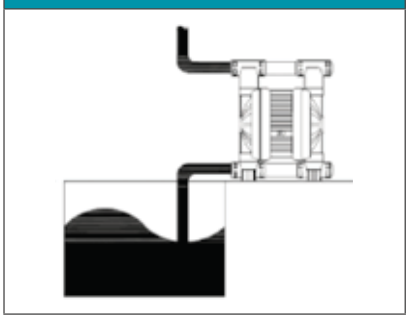

Immersed

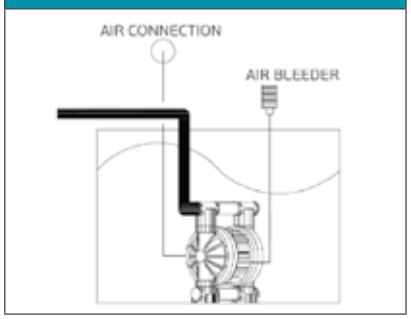

Twin Suction & Delivery Manifold

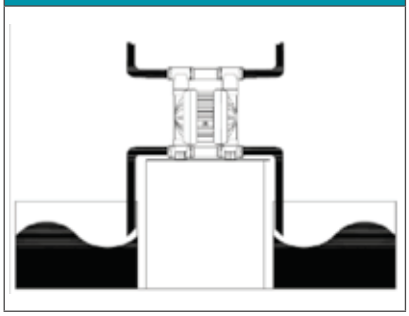

Positive Suction Head

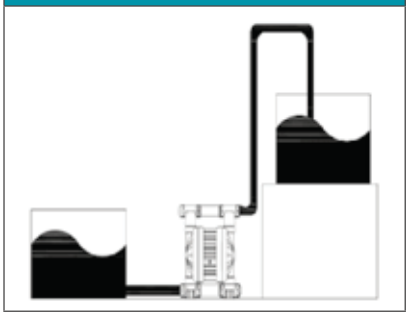

Twin Suction Manifold

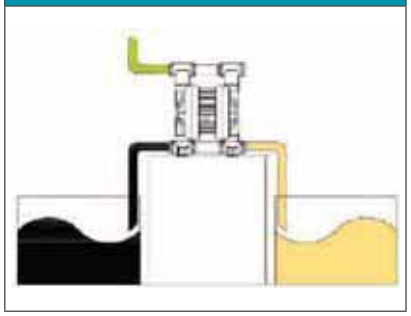

ATEX Certificate

ALPHADYNAMIC PUMPS has stored the documentation certifying ATEX compliance according to Directive 94/9/CE for it's ranges of Ruby air operated diaphragm pumps with the SGS Baseefa Limited certification body. They are manufactured in a CONDUCT, class II 2 GD c IIB T4 version.

The equipment user is responsible for classifying it's area of use. On the other hand, the manufacturer shall identify and affix the certification class of the manufactured equipment.

Ex II 2 GD c IIB T4
Baseefa15ATEX13DR

Advance Unified Diaphragms Featuring

- Easy installation and maintenance
- Excellent service life
- Inventory cost reduction
- Improved performance
- Greater displacement per cycle
- No center hole, elimination of potential leak paths.
- There is no need for the main axis to be insured
- They can be screwed and unscrewed without the use of tools

Advance Unified Diaphragm Offers:

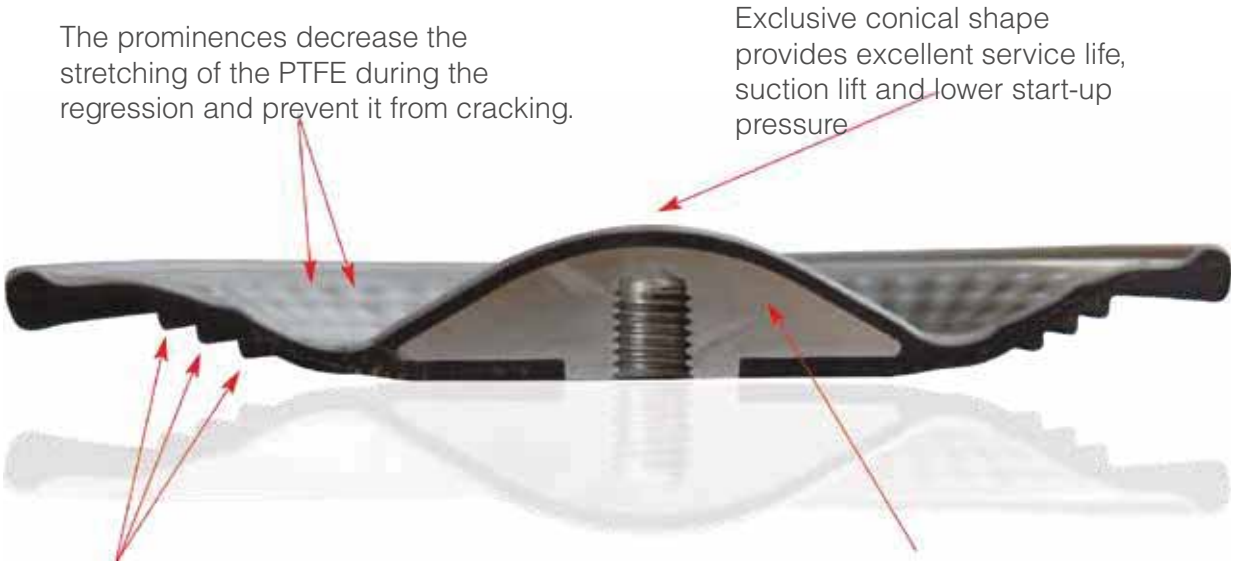

Minipump ADB005

Technical Data	
ATEX certification	Standard: II 3G Ex h IIB T4 Gc – II 3D Ex h IIIB T135 °C Dc Optional: II 2G Ex h IIB T4 Gb – II 2D Ex h IIIB T135 °C Db
Construction materials	PP, PP+CF
Intake/delivery connections (standard)	G1/4"
Air connection	1/8"
Max. self-priming capacity	3 m
Max. flow rate	5 l/min.
Max. head	70 m
Max. air supply pressure	7 bar
Diameter	0,5 mm
Max. operating temp.	60 °C
Weight	0,5 kg

*The curves and performance values refer to pumps with submerged suction and a free delivery outlet with water at 20°C, and vary according to the construction material.

Performance Minipump ADB005

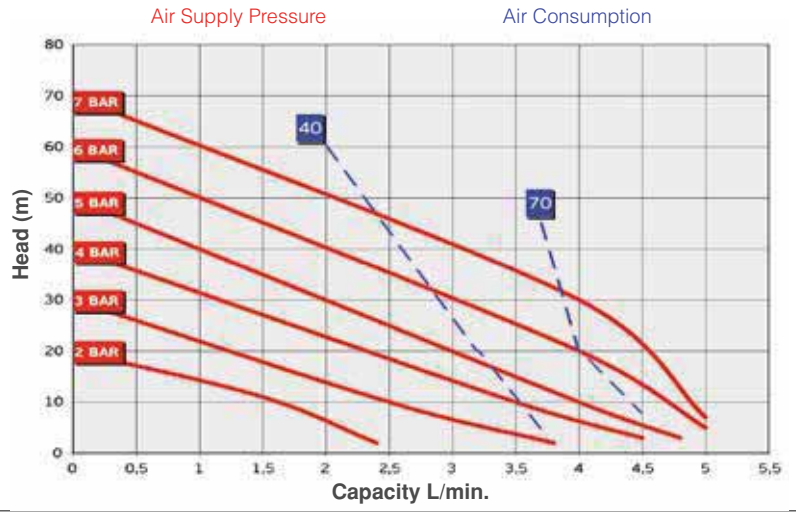

Dimensions

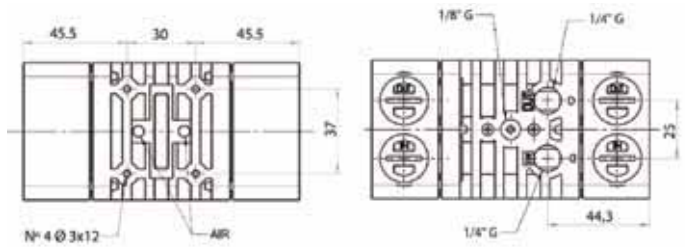

Minipump ADB017

Technical Data	
ATEX certification	Standard: II 3G Ex h IIB T4 Gc – II 3D Ex h IIIB T135 °C Dc Optional: II 2G Ex h IIB T4 Gb – II 2D Ex h IIIB T135 °C Db
Construction materials	PP, ECTFE, PP+CF
Intake/delivery connections (standard)	G 3/8"
Air connection	3/8"
Max. self-priming capacity	3 m
Max. flow rate	17 l/min
Max. head	70 m
Max. air supply pressure	7 bar
Diameter	0,5 mm
Max. operating temp.	60 °C, ECTFE 90 °C
Weight	1 kg, ECTFE 1,5 kg

*The curves and performance values refer to pumps with submerged suction and a free delivery outlet with water at 20°C, and vary according to the construction material.

Performance Minipump ADB017

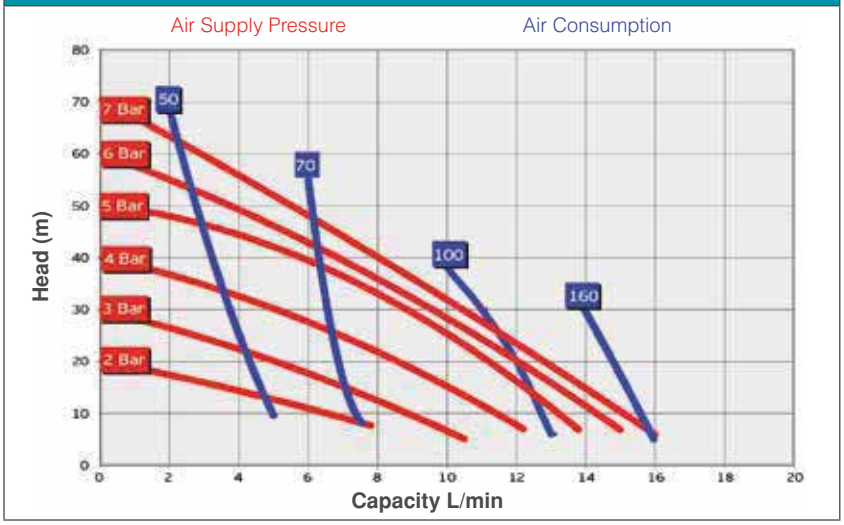

Dimensions

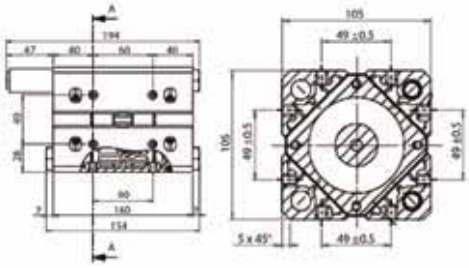

Ruby 012 Pump

Technical Data	
ATEX certification	Standard: II 3G Ex h IIB T4 Gc – II 3D Ex h IIIB T135 °C Dc Optional: II 2G Ex h IIB T4 Gb – II 2D Ex h IIIB T135 °C Db
Construction materials	PP, PVDF, PP+CF
Diaphragms	SANT+PTFE, HYTREL+PTFE
Intake/delivery connections	G 1/2"
Air connection	1/4"
Max. self-priming capacity	4 m
Max. flow rate	30 l/min..
Max. head	70 m
Max. air supply pressure	7 bar
Max solid size (diameter)	2 mm
Max. operating temp.	PP 60 °C, PVDF 95 °C, PP+CF 60 °C
Weight PP , PP+CF	1,6 kg
Weight PVDF	1,9 kg

*The curves and performance values refer to pumps with submerged suction and a free delivery outlet with water at 20 °C, and vary according to the construction material.

Curves Ruby 012

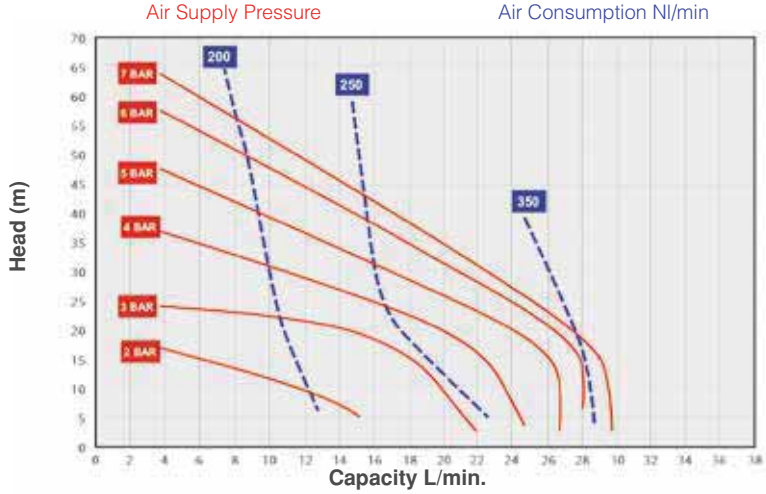

Dimensions

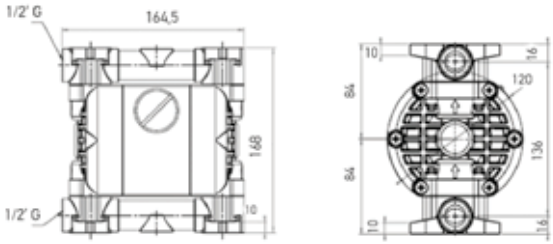

Ruby 15 Pump

Technical Data	
ATEX certification	Standard: II 3G Ex h IIB T4 Gc – II 3D Ex h IIIB T135 °C Dc Optional: II 2G Ex h IIB T4 Gb – II 2D Ex h IIIB T135 °C Db
Construction materials	PP, PVDF, Aluminium, AISI 316, PP+CF
Diaphragms	PTFE conductive EPDM(component) PTFE-A FULL CAPACITY WITH CONDUCTİVE EPDM(component) NBR conductive EPDM conductive
Intake/delivery connections	G 1/2"
Air connection	1/2"
*Max. self-priming capacity	4 m
*Max. flow rate	72 l/min.
Max. head	70 m
Max. air supply pressure	7 bar
Diameter	3,0 mm
Max. operating temp.	PP 60 °C, PVDF 95 °C, Alu 95 °C, AISI 316 95 °C
Weight PP	4 kg
Weight PVDF	5,5 kg
Weight Aluminium	6 kg
Weight AISI 316	9 kg

*The curves and performance values refer to pumps with submerged suction and a free delivery outlet with water at 20 °C, and vary according to the construction material.

Curves Ruby 015 PTFE Fitted

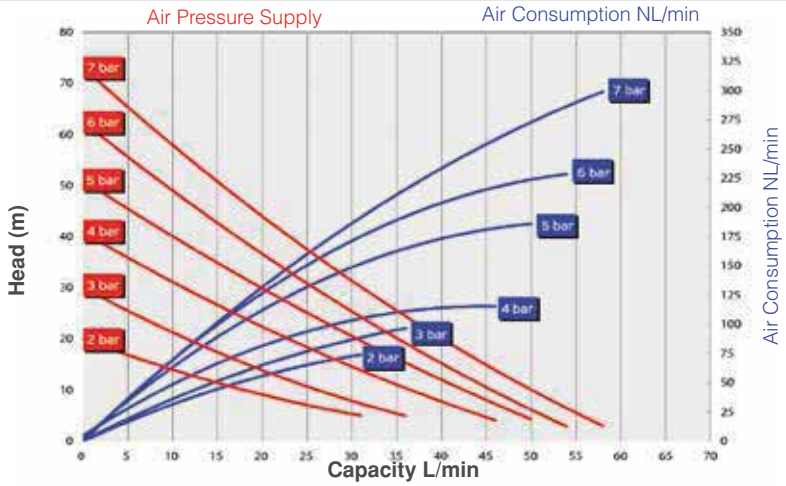

Dimensions Not Metallic Pump

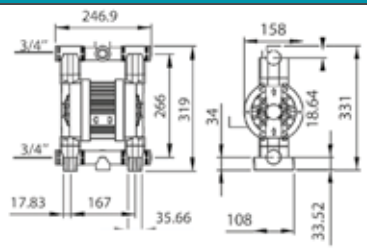

Ruby 15 Pump

Curves Ruby 015 PTFE Full Capacity Fitted

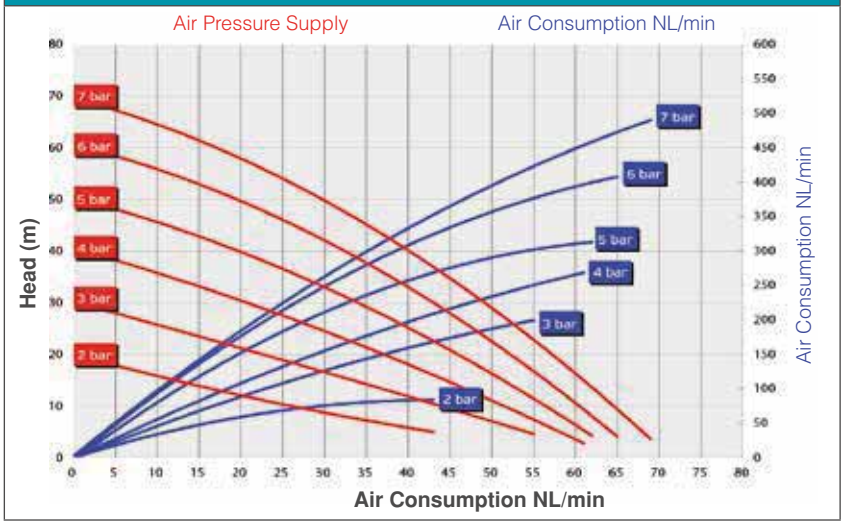

Curves Ruby 015 Rubber Fitted

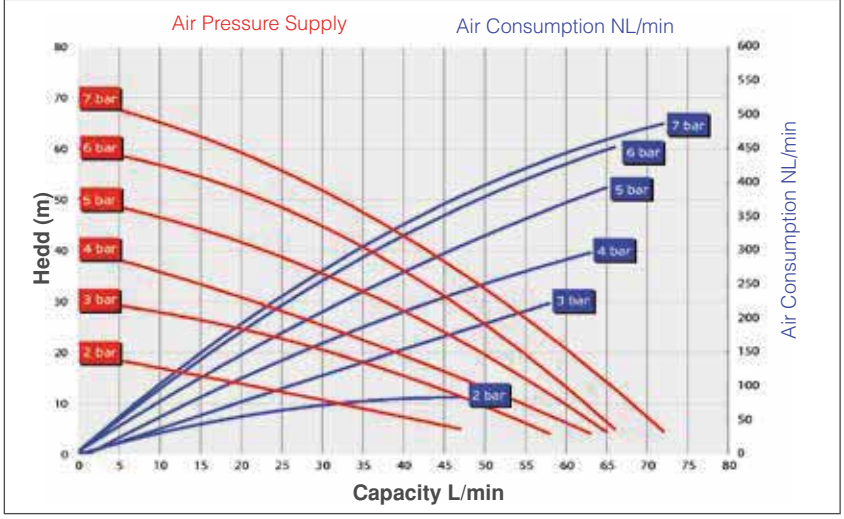

Dimensions Metallic Pump

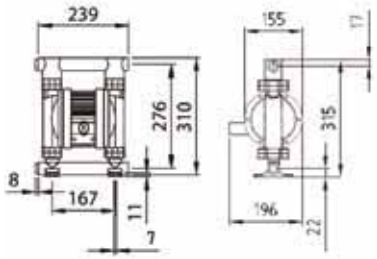

Ruby 20 Pump

Technical Data	
ATEX certification	Standard: II 3G Ex h IIB T4 Gc – II 3D Ex h IIIB T135 °C Dc Optional: II 2G Ex h IIB T4 Gb – II 2D Ex h IIIB T135 °C Db
Construction materials	PP, PVDF, Aluminium, PP+CF
Diaphragms	Conductive NBR, Conductive EPDM, PTFE with conductive EPDM (Compound)
Intake/delivery connections (standard)	G 3/4"
Air connection	1/2"
*Max. self-priming capacity	4 m
*Max. flow rate	117 l/min.
Max. head	80 m
Max. air supply pressure	8 bar
Diameter	3 mm
Max. operating temp.	PP 60 °C, PVDF 95 °C, Alu 95 °C
Weight PP	4 kg
Weight PVDF	5,5 kg
Weight Aluminium	6 kg

*The curves and performance values refer to pumps with submerged suction and a free delivery outlet with water at 20°C, and vary according to the construction material.

Ruby 020 - Full Capacity PTFE - A Fitted

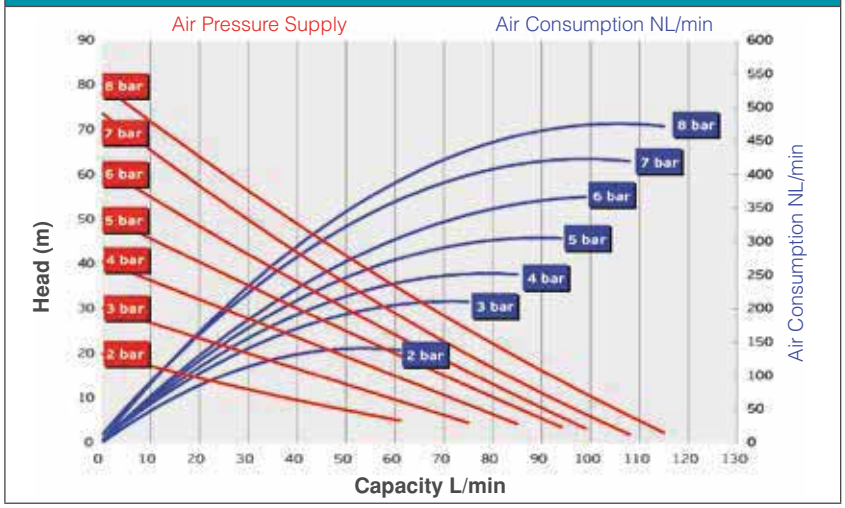

Dimensions Not Metallic Pump

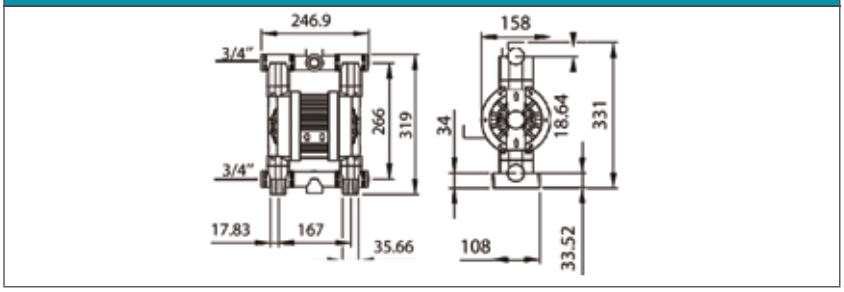

Ruby 20 Pump

Ruby 020 - Rubber Fitted

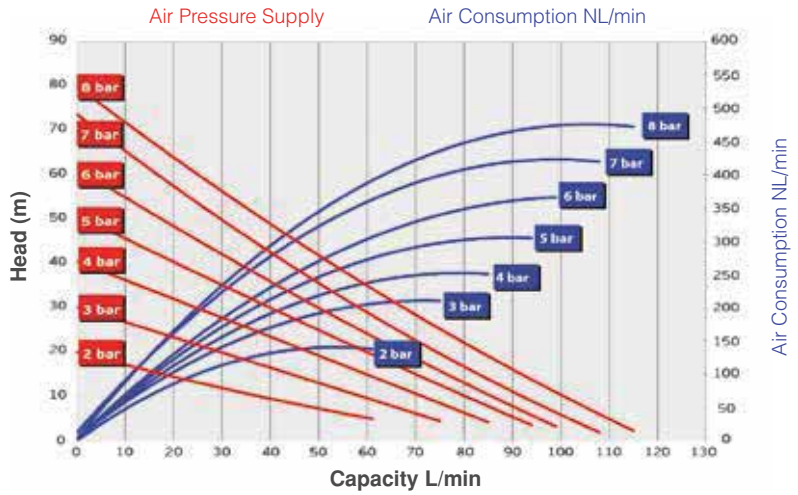

Ruby 020 - Ptfe Fitted

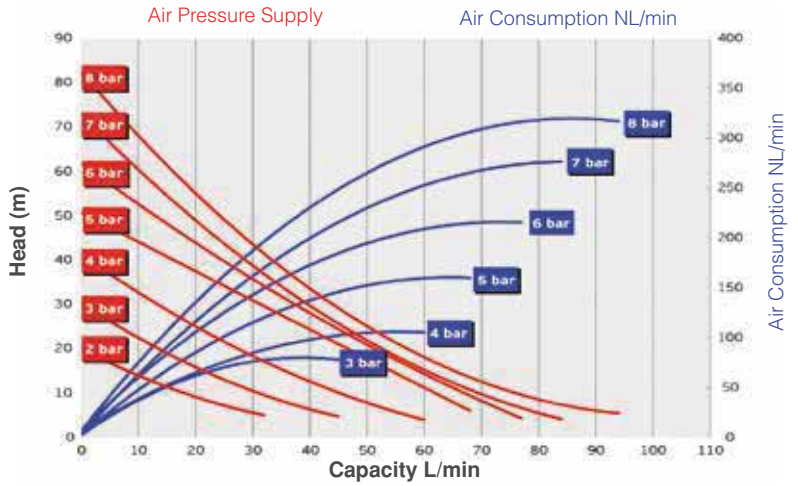

Dimensions Metallic Pump

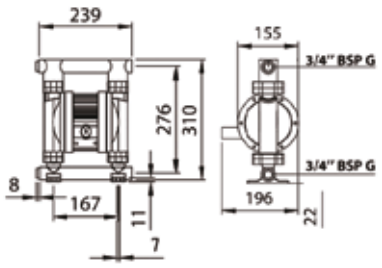

Ruby 25 Pump

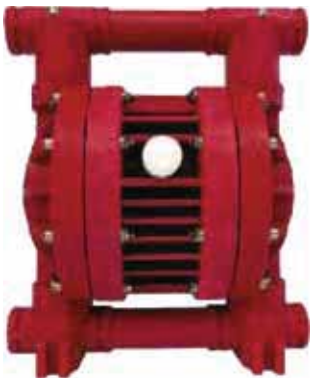

Technical Data	
ATEX certification	Standard: II 3G Ex h IIB T4 Gc – II 3D Ex h IIIB T135 °C Dc Optional: II 2G Ex h IIB T4 Gb – II 2D Ex h IIIB T135 °C Db
Construction materials	PP, PVDF, Aluminium, AISI 316, PP+CF
Diaphragms	PTFE with Conductive EPDM (compound) PTFE-A Full Capacity with conductive EPDM (compound) NBR Conductive EPDM Conductive
Intake/delivery connections	G1"
Air connection	1/2"
*Max. self-priming capacity	4 m
*Max. flow rate	175 l/min.
Max. head	70 m
Max. air supply pressure	7 bar
Diameter	3,5 mm
Max. operating temp.	PP 60 °C, PVDF 95 °C, Alu 95 °C, AISI 316 95 °C
Weight PP	6 kg
Weight PVDF	7 kg
Weight Aluminium	7,5 kg
Weight AISI 316	14 kg

*The curves and performance values refer to pumps with submerged suction and a free delivery outlet with water at 20°C, and vary according to the construction material.

Ruby 025 - Full Capacity PTFE - A Fitted

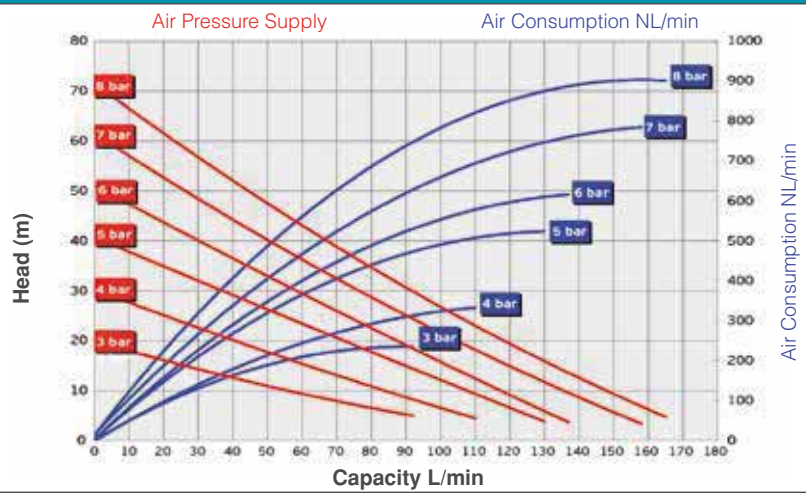

Dimensions Not Metallic Pump

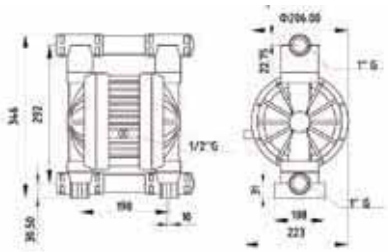

Ruby 25 Pump

Ruby 025 - Rubber Fitted

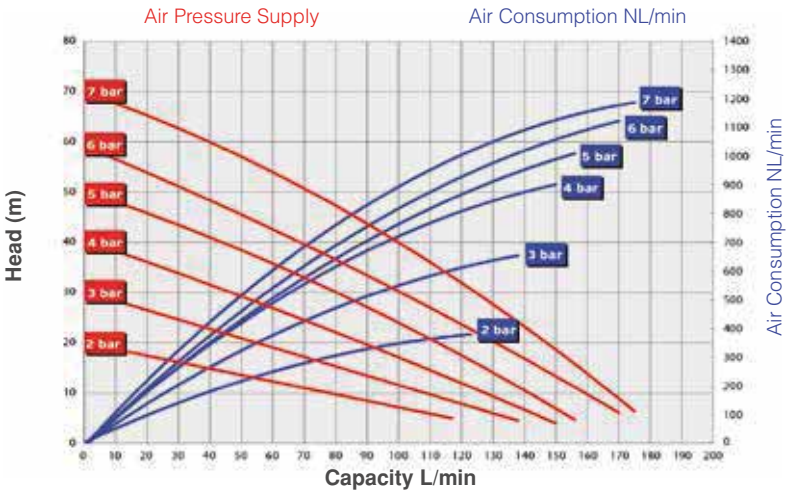

Air Consumption NL/min

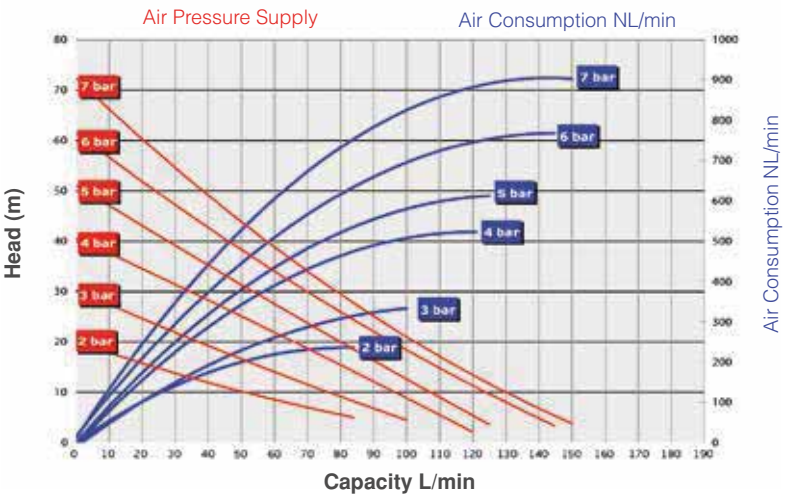

Dimensions Metallic Pump

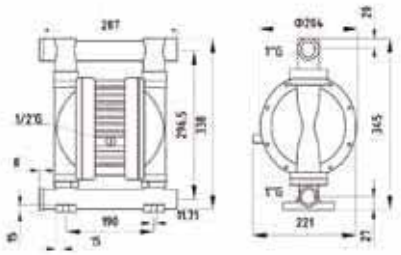

Ruby 25 Pump

Technical Data	
ATEX certification	Standard: II 3G Ex h IIB T4 Gc – II 3D Ex h IIIB T135 °C Dc Optional: II 2G Ex h IIB T4 Gb – II 2D Ex h IIIB T135 °C Db
Body materials	Aluminium, AISI316
Central block	Aluminium
Diaphragms	PTFE with Conductive EPDM (compound) PTFE-A Full Capacity with conductive EPDM(compound) NBR Conductive EPDM Conductive
Intake/delivery connections	G 1"
Air connection	1/2"
*Max. self-priming capacity	4 m
*Max. flow rate	175 l/min.
Max. head	70 m
Max. air supply pressure	7 bar
Diameter	3,5 mm
Max. operating temp.	130 °C
Weight Aluminium	10 kg
Weight AISI 316	17 kg

*The curves and performance values refer to pumps with submerged suction and a free delivery outlet with water at 20°C, and vary according to the construction material.

Ruby 025 - Full Capacity PTFE - A Fitted

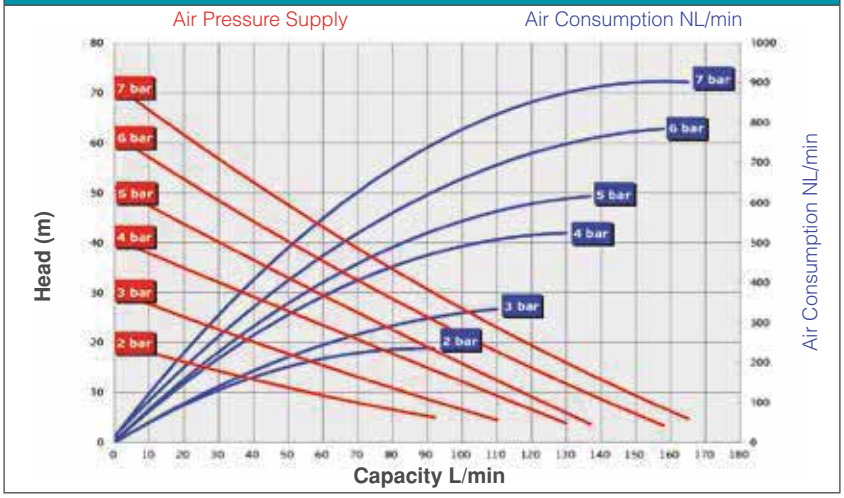

Dimensions Not Metallic Pump

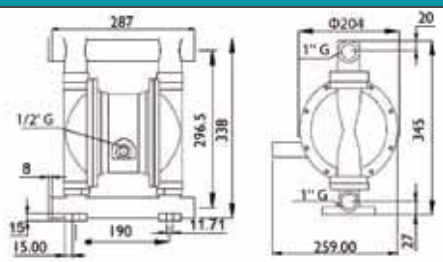

Ruby 25 Pump

Ruby 025 - Rubber Fitted

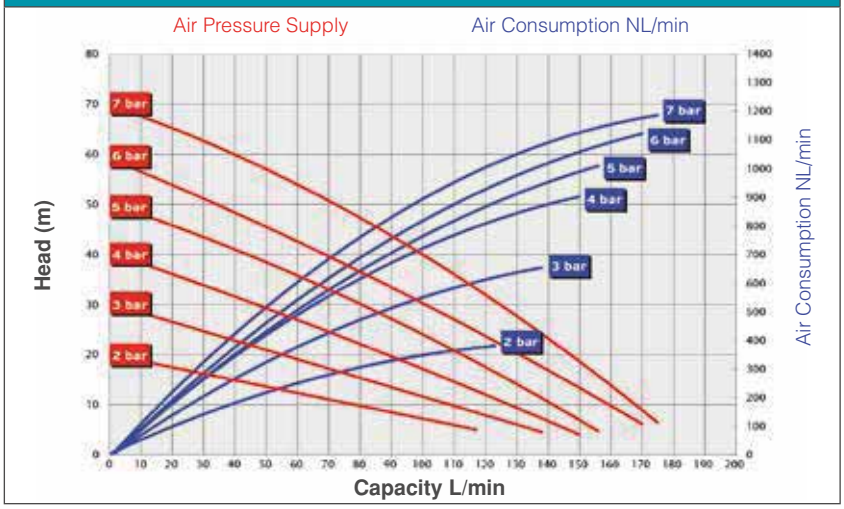

Ruby 025 - PTFE Fitted

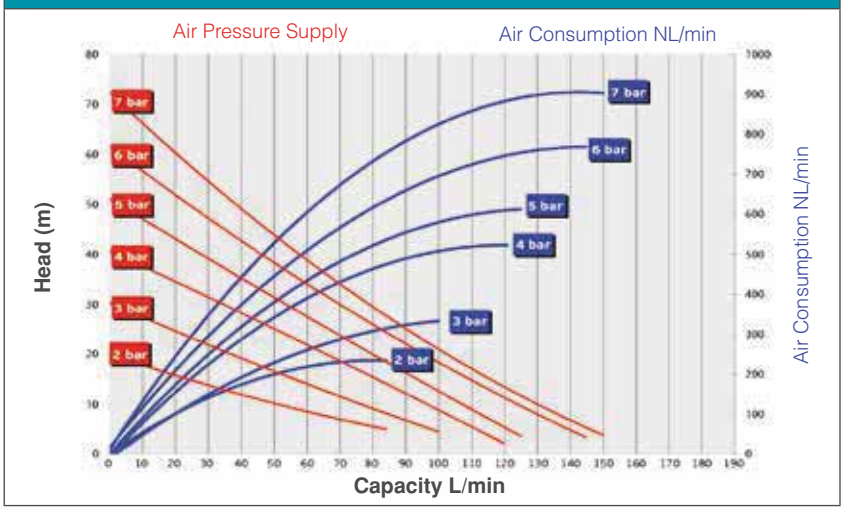

Dimensions Metal Pump

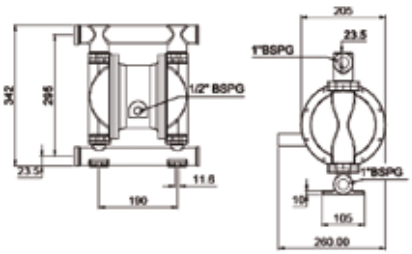

Ruby 40 Pump

Technical Data	
Atex Certification	Standard: II 3G Ex h IIB T4 Gc – II 3D Ex h IIIB T135 °C Dc Optional: II 2G Ex h IIB T4 Gb – II 2D Ex h IIIB T135 °C Db
Construction materials	PP, PVDF, Aluminium, AISI 316, PP+CF
Diaphragms	PTFE with Conductive EPDM (compound) PTFE-A Full Capacity with conductive EPDM (compound) NBR Conductive EPDM Conductive
Intake/delivery connections G 1"	G 1 1/2"
Air connection 1/2"	1/2"
*Max. self-priming capacity 5 m	5 m
*Max. flow rate 360l/dk.	360 l/min.
Max. head 70 m	70 m
Max. air supply pressure 7 bar	7 bar
Max solid size (Diameter) 5 mm	5 mm
Max. operating temp. pp 60	PP: 60 °C, PVDF: 95 °C, Alu: 95 °C, AISI316: 95 °C
Weight PP	14 kg
Weight PVDF	22 kg
Weight Alu	14 kg
Weight AISI316	30 kg

*The curves and performance values refer to pumps with submerged suction and a free delivery outlet with water at 20 °C, and vary according to the construction material.

Ruby 040 - Full Capacity PTFE - A Fitted

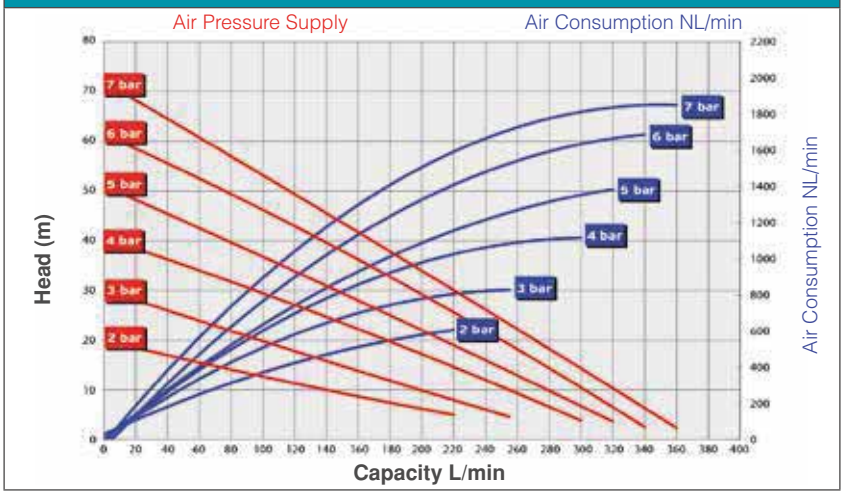

Dimensions Not Metallic Pump

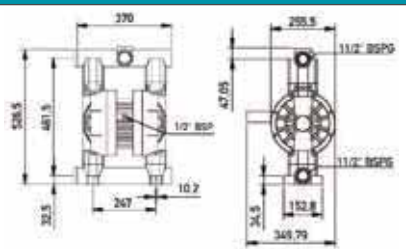

Ruby 40 Pump

Ruby 040 - Rubber Fitted

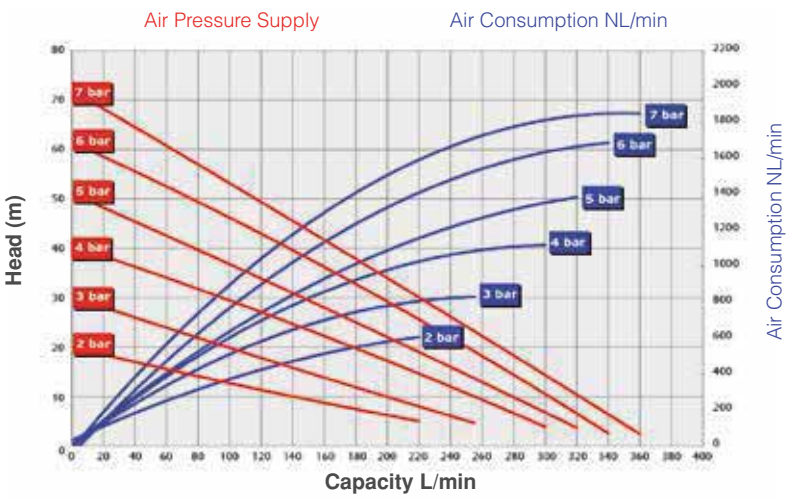

Ruby 040 - PTFE Fitted

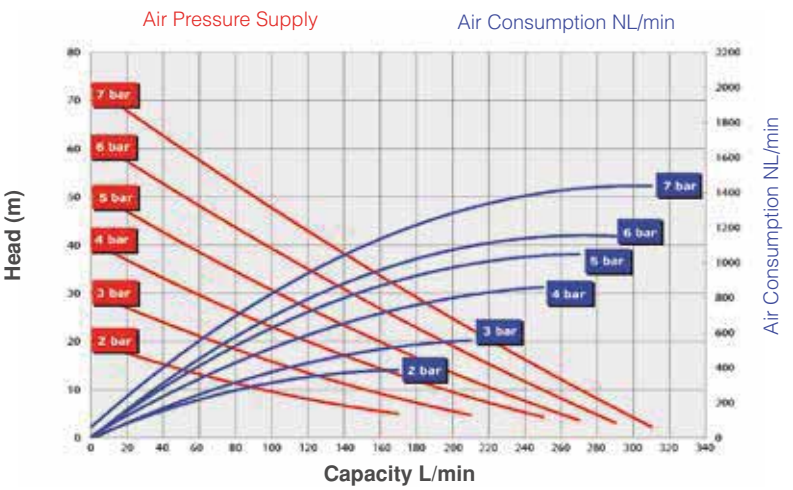

Dimensions Metallic Pump

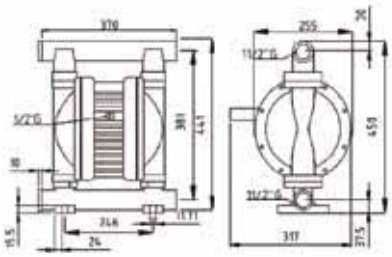

Ruby 40 Pump

Technical Data	
Atex certification	Standard: II 3G Ex h IIB T4 Gc – II 3D Ex h IIIB T135 °C Dc Optional: II 2G Ex h IIB T4 Gb – II 2D Ex h IIIB T135 °C Db
Body material	Aluminium, AISI 316
Central block	Aluminium
Diaphragms	PTFE with Conductive EPDM (compound) PTFE-A Full Capacity with conductive EPDM (compound) NBR Conductive EPDM Conductive
Intake / delivery connections	G 1 1/2"
Air connection	1/2"
* Max self-priming capacity	4,5 m
* Max. flow rate	320 l/min.
Max head	70 m
Max air supply	7 bar
Max. solid size (diameter)	5 mm
Max operating Temperature	130 °C
Weight Aluminium	17 kg
Weight AISI 316	33 kg

*The curves and performance values refer to pumps with submerged suction and a free delivery outlet with water at 20 °C, and vary according to the construction material.

Ruby 040 - Full Capacity PTFE - A Fitted

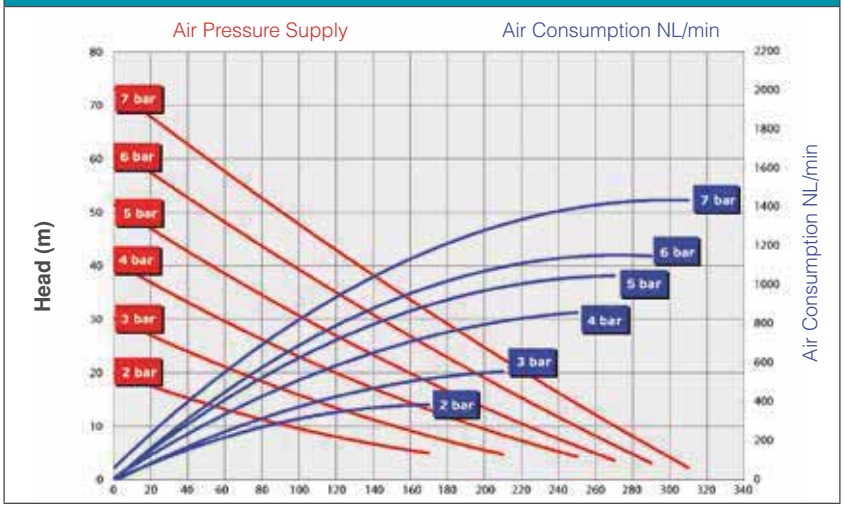

Dimensions Aluminium Pump

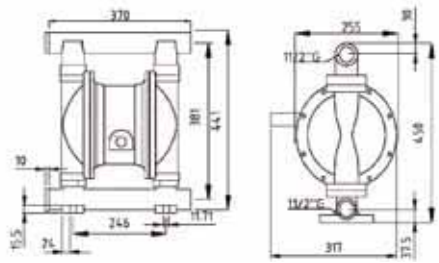

Ruby 40 Pump

Ruby 040 - PTFE Fitted

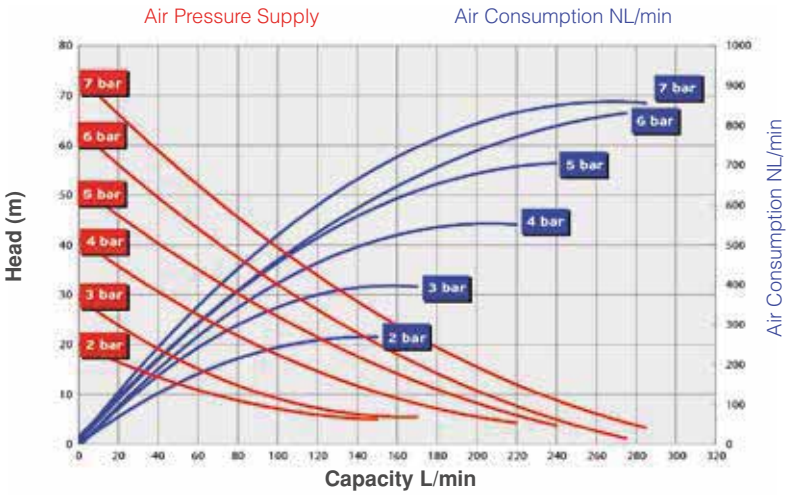

Ruby 040 - Rubber Fitted

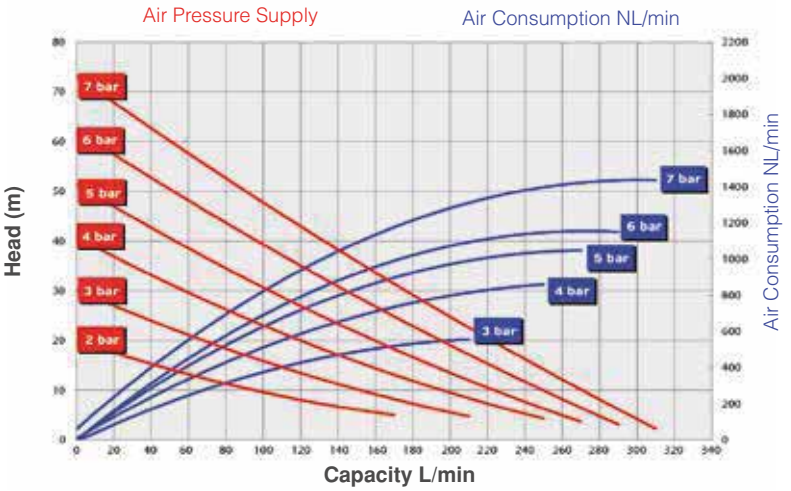

Dimensions AISI316 Pump

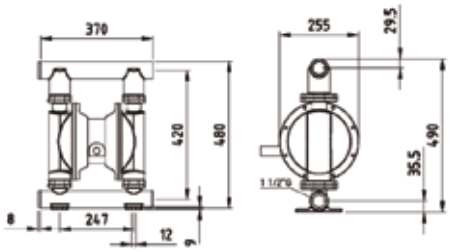

Ruby 50 Pump

Technical Data	
ATEX certification	Standard: II 3G Ex h IIB T4 Gc – II 3D Ex h IIIB T135 °C Dc Optional: II 2G Ex h IIB T4 Gb – II 2D Ex h IIIB T135 °C Db
Construction materials	Aluminium, AISI316
Diaphragms	Conductive NBR , Conductive EPDM, PTFE with conductive EPDM (Compound)
Intake/delivery connections (standard)	2" BSP G - Flange on Request
Air connection	3/4"
*Max. self-priming capacity	5 m
*Max. flow rate	696 l/min.
Max. head	70 m
Max. air supply pressure	7 bar
Diameter	8 mm
Max. operating temp.	95 °C
Weight Aluminium	50 kg
Weight AISI 316	70 kg

*The curves and performance values refer to pumps with submerged suction and a free delivery outlet with water at 20°C, and vary according to the construction material.

Ruby 050 - Rubber Fitted

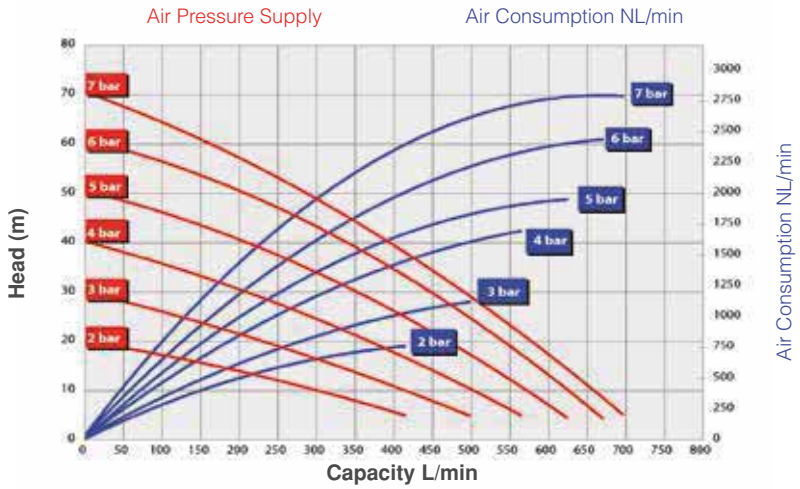

Dimensions Metallic Pump

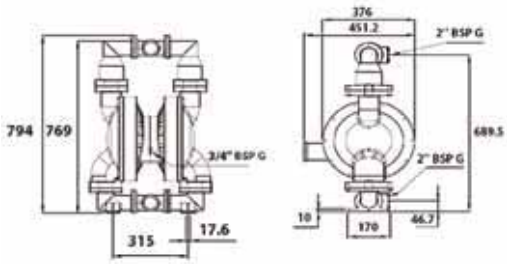

Ruby 50 Pump

Ruby 050 - Full Capacity PTFE Fitted

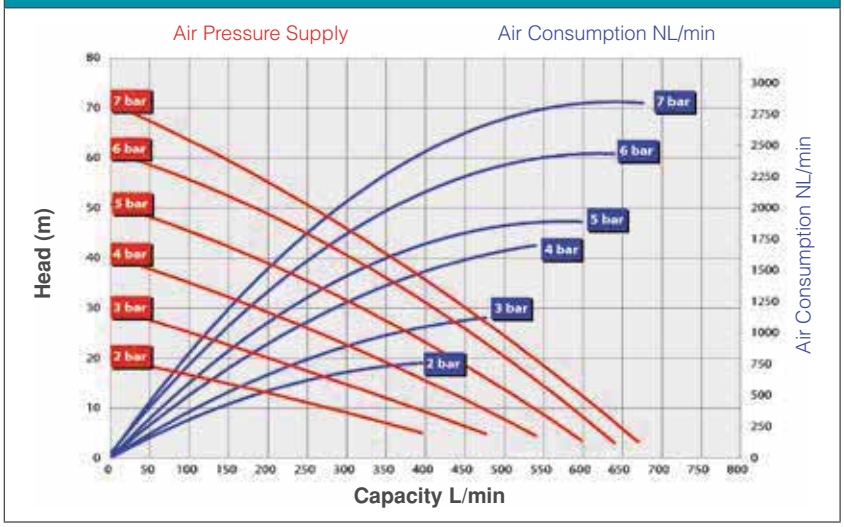

Ruby 050 - PTFE Fitted

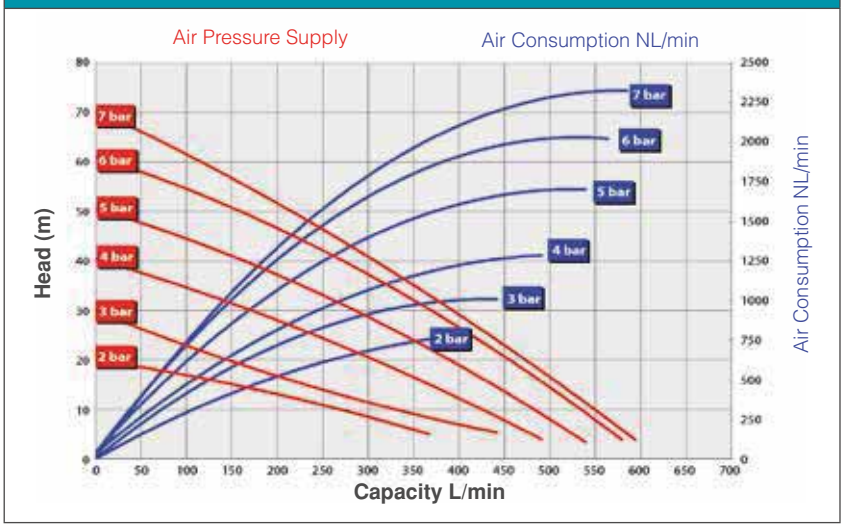

Ruby 150 Pump

Technical Data	
ATEX certification	Standard: II 3G Ex h IIB T4 Gc – II 3D Ex h IIIB T135 °C Dc Optional: II 2G Ex h IIB T4 Gb – II 2D Ex h IIIB T135 °C Db
Construction materials	Aluminium
Diaphragms	Conductive NBR, Conductive EPDM, PTFE with conductive EPDM (Compound)
Intake/delivery connections	2" BSP G- Flange on Request
Air connection	3/4"
*Max. self-priming capacity	5 m
*Max. flow rate	696 l/min.
Max. head	80 m
Max. air supply pressure	8 bar
Diameter	8 mm
Max. operating temp.	95 °C
Weight	35 kg

*The curves and performance values refer to pumps with submerged suction and a free delivery outlet with water at 20 °C, and vary according to the construction material.

Ruby 150

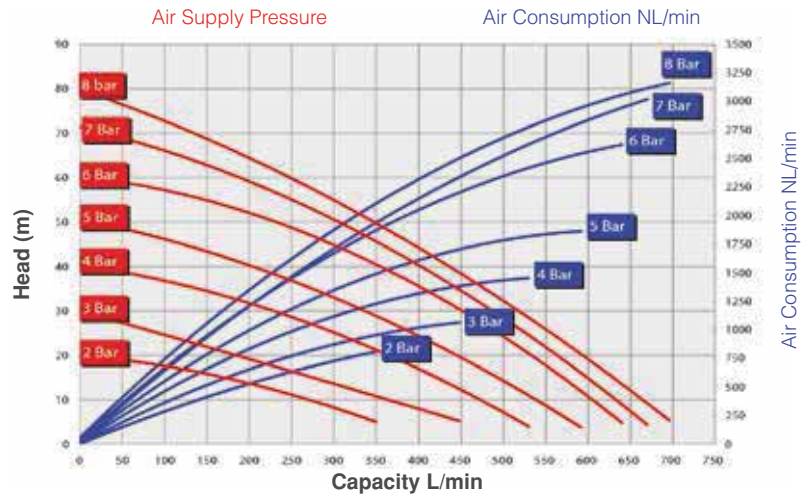

Dimensions

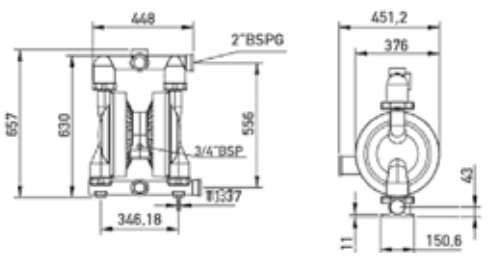

Ruby 051 Pump

Technical Data	
ATEX certification	Standard: II 3G Ex h IIB T4 Gc – II 3D Ex h IIIB T135 °C Dc Optional: II 2G Ex h IIB T4 Gb – II 2D Ex h IIIB T135 °C Db
Construction materials	PP, PVDF, PP+CF
Diaphragms	NBR, EPDM, PTFE, SANTOPRENE, HYTREL
Intake/delivery connections	G 2"
Air connection	1/2"
Max. self-priming capacity	5 m
Max. flow rate	650 l/min.
Max. head	70 m
Max. air supply pressure	7 bar
Max solid size (diameter)	8 mm
Max. operating temp.	PP 60 °C, PVDF 95 °C, PP+CF 60 °C
Weight PP	38 kg
Weight PVDF	45 kg

*The curves and performance values refer to pumps with submerged suction and a free delivery outlet with water at 20 °C, and vary according to the construction material.

Curves Ruby 051 Pump

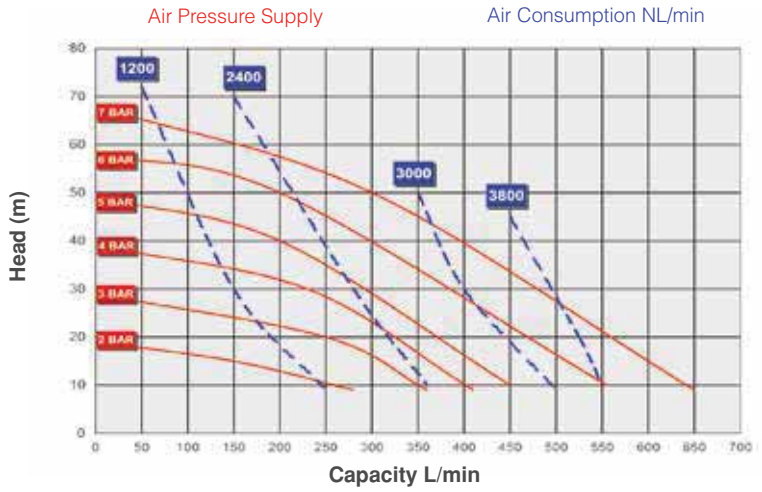

Dimensions Not Metallic Pump

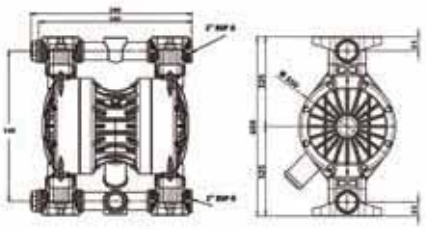

Ruby 80 Pump

Technical Data	
ATEX certification	Standard: II 3G Ex h IIB T4 Gc – II 3D Ex h IIIB T135 °C Dc Optional: II 2G Ex h IIB T4 Gb – II 2D Ex h IIIB T135 °C Db
Construction materials	Aluminium, AISI316
Diaphragms	Conductive NBR , Conductive EPDM , PTFE with conductive EPDM (Compound)
Intake/delivery connections (standard)	2" BSP G - Flange on Request
Air connection	3/4"
*Max. self-priming capacity	5 m
*Max. flow rate	696 l/min.
Max. head	70 m
Max. air supply pressure	7 bar
Diameter	8 mm
Max. operating temp.	95 °C
Weight Aluminium	50 kg
Weight AISI 316	70 kg

*The curves and performance values refer to pumps with submerged suction and a free delivery outlet with water at 20°C, and vary according to the construction material.

Ruby 080 - Full Capacity PTFE Fitted

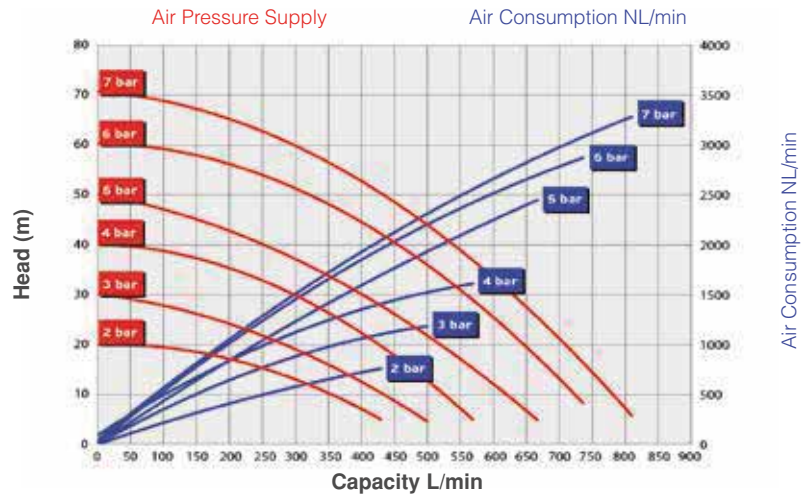

Ruby 80 Pump

RUBY 080 - PTFE Fitted

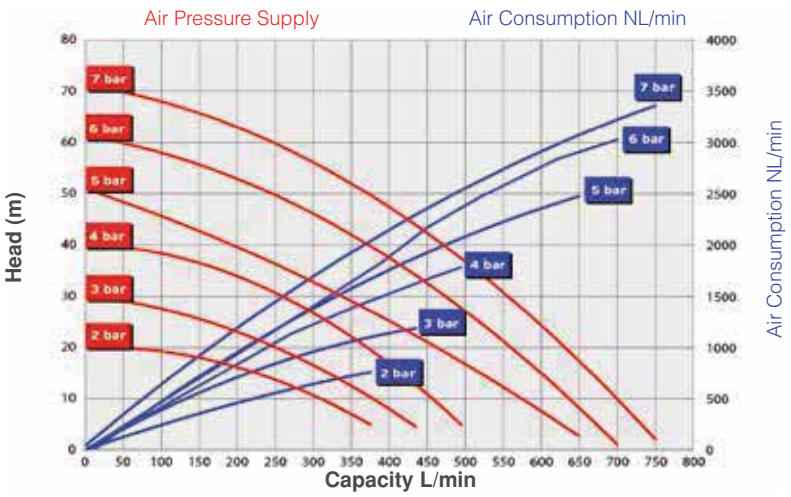

Ruby 080 - Rubber Fitted

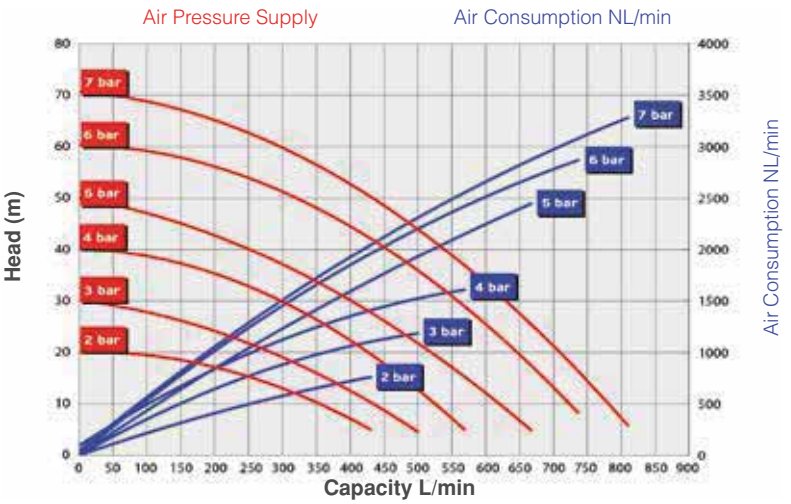

Dimensions Metallic Pump

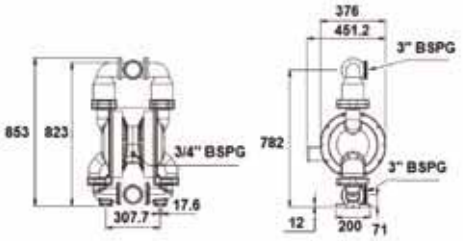

Ruby 81 Pump

Technical Data	
ATEX certification	Standard: II 3G Ex h IIB T4 Gc – II 3D Ex h IIIB T135°C Dc Optional: II 2G Ex h IIB T4 Gb – II 2D Ex h IIIB T135°C Db
Construction materials	PP – PVDF – PP+CF
Diaphragms	NBR, EPDM, PTFE, SANTOPRENE, HYTREL
Intake/delivery connections	G 3”
Air connection	1/2"
Max. self-priming capacity	5 m
Max. flow rate	900 l/min.
Max. head	70 m
Max. air supply pressure	7 bar
Max solid size (diameter)	10 mm
Max. operating temp.	PP 60 °C, PVDF 95 °C, PP+CF 60 °C
Weight Aluminium	50 kg
Weight AISI 316	67 kg

*The curves and performance values refer to pumps with submerged suction and a free delivery outlet with water at 20 °C, and vary according to the construction material.

Ruby 81

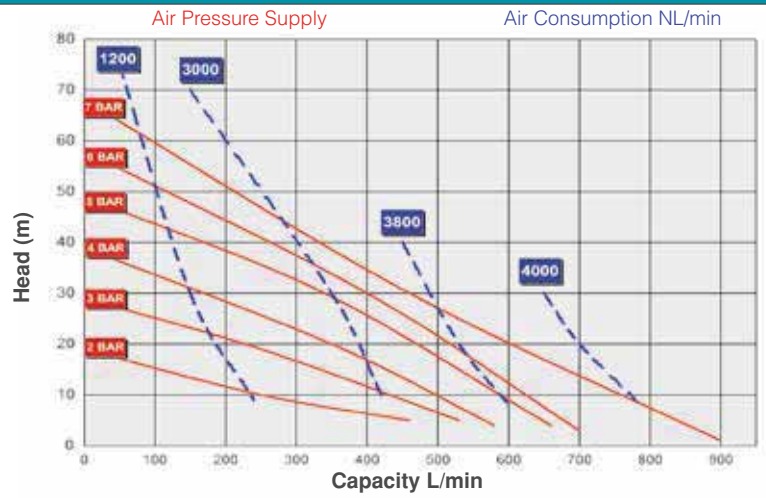

Dimensions Not Metallic Pump

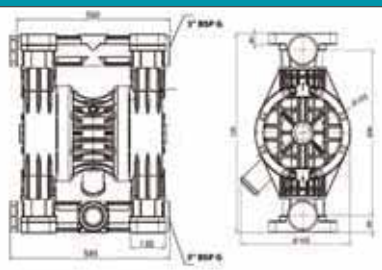

EKİN ENDÜSTRİYEL

DRUM PUMP

FLUID TRANSFER PRODUCTS

Assembly Details

All kinds of impeller models adopted sealless design, moisture dry-running is available resistance more than 30 minutes operation.

HD-E1-V HD-A1 HD-A2 HD-A6
HD-E2-V

Safety Coupling
Effectively prevent motor failure.

Compact Design
Fast strip down for quick change of pump and motor.

High Performance Bearing Sets
For better performance and reduce power consumption. Stainless steel for high temperature application.

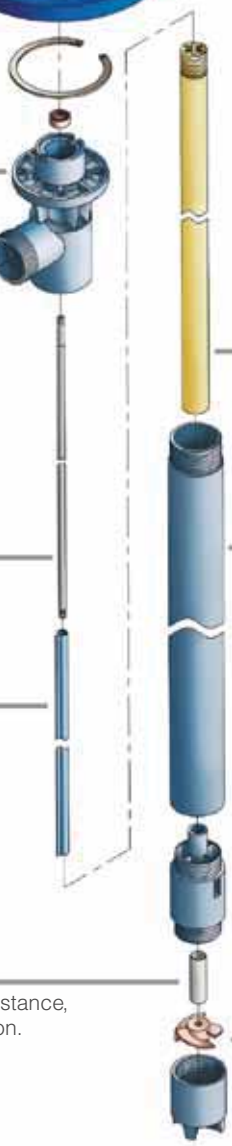

Flange Connection
PPHT, SS316, PVDF.

Barb Fittings
Special design for quick and safe change of fittings.

Inner & Outer Tube
PPHT, PVDF, SS316.

Hight Quality Shaft
SS Series: SS316
PPHT, PVDF Series, Hastelloy.

PTFE Guide Sleeve
Ensure shaft stability.

Threaded Design
Easy maintenance without any special tools required. Quick change of impeller and housing.

Rulon Shaft Bushing
Rulon for better acid and alkali resistance, high wear resistance and low friction.

PVDF Impeller
Robust construction to improve abrasion resistance.

Pump Series

Special design for easy repair and quick change of spare parts without any special tool. PTFE guide sleeve and PVDF impeller with abrasion resistant and to make shaft running more stable. Shaft bushing is made of Rulon for best chemical resistance. PPHT PVDF SUS316 tube available with drive shaft made of SUS316 or Hastelloy.
It's the best choice for transferring chemical fluid.

INDUSTRY SERVED

Electronic Optoelectronics Semi-conductor Waste water Chemical industry Petrochemical Laboratory Food industry Cosmetic Biochemistry Paper making industry Painting industry Pharmaceutical Ship industry automotive and other industries.

APPLICATION		
Cotainer Type	Model	Lenght
5GAL Bottles	HD-Material 700	700mm (27")
55GAL Drums (200L)	HD-Material 1000	1000mm (39")
Barrels & Tanks	HD-Material 1200	1200mm (47")
IBC'S	HD-Material 1500	1500mm (60")
Large Stronge Vessels	HD-Material 1800	1800mm (72")

COMMON APPLICATIONS		
Material	Maks. Sıcaklık	Ortak Uygulamalar
PPHT (Polypropylene)	80 ºC / 175 ºF	Acetic Acid, Sulfuric Acid Hydrochloric - 20%, Nitric Acid - 20%, Alkalies, Ferric Chloride.
PVDF	100 ºC / 212 ºF	Concentrated Nitric Acid, Sulfuric Acid-66 Baume, Sodium Hypochlorite, Propionic, Acid,Stearic Acid,Hydrofluoric Acid.
SS	100 ºC / 212 ºF	Alcohol, Gasoline, Aqueous Ammonia, Isopropyl Ether, Solvents, Petroleum Products

! For safety, it's recommended to connect ground wire when pumping flammable or solvent liquids.

HD High Viscosity Screw Pump

Applications

From high to low viscosity liquid aggressive or neutral liquid polymer lubricator ink shampoo PU & PVC resin and so on.

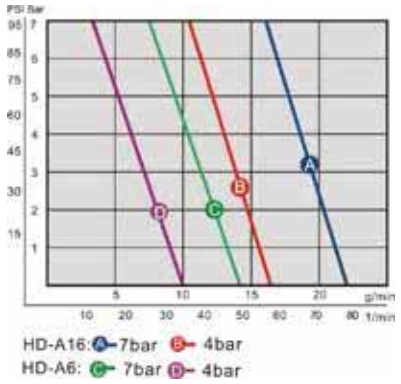

Test Conditions

Viscosity: 5,000cps
Performance curves may vary 10% based on applications.

HD-HV HIGH VISCOSITY SERIES			
Model	HD-SS700-HV	Size	700mm Size (27") 5 GAL. Bottles
	HD-SS1000-HV		1000mm (39") 55 GAL. (200L) Drum
Max. Temp.: 120 ºC / 248 ºF			
Outlet Dimension: 27.5 mm / 33 mm			
Pump: SUS316			
Rotor: SUS316			
Stator: PTFE			
Max. Viscosity: 100,000cps			
Mec. Seal: SIC			
O-ring: PTFE			
Max. Flow Rate: 90 L/min (tested with 2000 cps epoxy and HD-A6 air Motor)			
Max. Pressure: 10 bar			
Weight: 12 kg			

AIR Motor & HD-E Motor

AIR MOTOR & VARIABLE SPEED CONTROL MOTOR

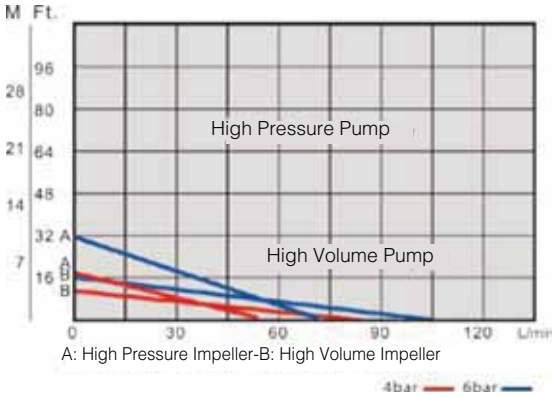

A: High Pressure Impeller-B: High Volume Impeller

Test Conditions

A: With HD-SS1000-HP tube B: HD SS1000 tube.
Pump tested in 25 °C water, 500L drum, with 1" outlet.
Performance curves may vary -+10%based on applications.
Max. head is obtained by closing outlet.

Please install the air filter for reduce moisture from the compressed air supply.

HD-A1 OIL FREE AIR MOTOR
Max. Inlet Air Pressure: 87psi (6bar)
Air Consumption: 0.55Nm /min @6 kg/cm^2
Joint (air): 1/4" NPT
Accessories: Muffler Air Regulator
Casing: Aluminum (Epoxy)
Max. Viscosity: 700cps
RPM: 7,500 (3bar Air Pressure)
RPM: 18,000 (6bar Air Pressure)
Horsepower: 420w (0.56HP)
Weight: 1 kg

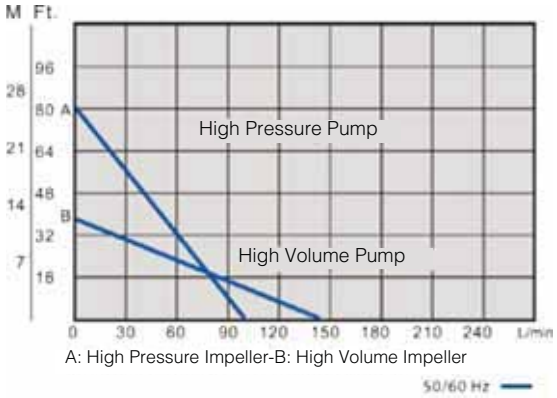

A: High Pressure Impeller-B: High Volume Impeller

Test Conditions

A: Hd-SS1000 tube ile B: HD-S1000 tube.
Pump tested in 25 °C water, 500L drum, with 1" outlet.
Performance curves may vary -+10% based on applications.
Max. head isobtained by closing outlet.

Suitable for pumping flammable or combustible liquid.

VARIABLE SPEED CONTROL MOTOR
HD-E1-V 110 V / 1 Ø / 50-60 Hz / 485w **HD-E2-V** 220 V / 1 Ø / 50-60 Hz / 485w
Max. Viscosity: 1,000cps
Max. RPM: 20,000rpm (NO-LOAD)
Overheated Protector
Safety Handling Switch
Casing use fireproof material
5m SJT Electronic Wire & Plug Included
Protection: IP44
Weight: 3 kg

Air Motor & HD-E Motor

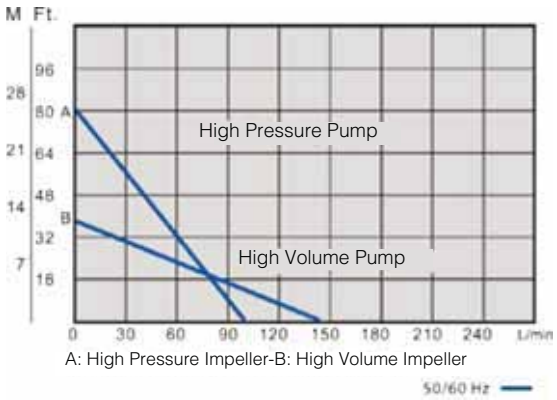

A: High Pressure Impeller-B: High Volume Impeller

Test Conditions

A: With HD-SS1000-HP tube B: HD SS1000 tube.
Pump tested in 25 oC water, 500L drum, with 1" outlet.
Performance curves may vary -+10%based on applications.
Max. head is obtained by closing outlet.

Please install the air filter for reduce moisture from the compressed air supply.

HD-A2 OIL FREE AIR MOTOR
Max. Inlet Air Pressure: 87psi (6 bar)
Air Consumption: 0.55Nm /min@6kg/cm^2
Joint (air): 1/4" NPT
Casing: Aluminum (Epoxy)
Max. Viscosity: 1,200cps
RPM: 8,000 (3bar Air Pressure)
RPM: 18,000 (6bar Air Pressure)
Horsepower: 560w (0.75HP)
Weight: 1.2 kg

Options

NOZZLE

- Control the flow rate easily.
- Keep the operating environment clean.
- Design to transfer to small containers safely.
- Body Polypropylene
- O-Ring Viton

GROUND WIRE

- It's important to connect ground wire when pumping flammable or explosive liquids.
- Each 150cm length 16ga electronic wire set comes with clip for connects.

ADAPTOR

- Barrel Adaptor
- Material PP SS 43mm(1.7 inch) thread Air Leaking Adaptor
- Material PP SS Viton barrier to prevent corrosive air from leaking.

WALL BRACKET

- SUS316

TRASFER HOSE

- PFA Hose
  1000mm
  1500mm
  2000mm is available upon request.
- Braided Hose.

STRAINER

- Recommend when pumping dirty chemical liquids
- Material : PP. PVDF& SS316
- PP Mesh : 2x11mm

DIGITAL FLOW METER

- Casing PP
- Rotor ECTFE
- Sensor CPVC
- Inlet/Outlet 1"PT
- LCD display

HANGER

- SUS304
- For high viscosity series.

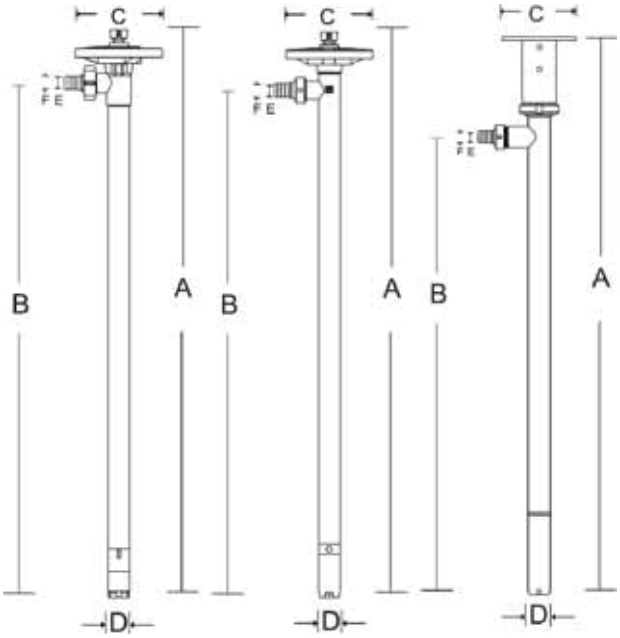

HD-PPHT/PVDF series HD-SS series HD-SS-HV series

Material	Length	A	B	C	D	E	F
PPHT	700	810	700	170	41	19	27
	1000	1100	1000	170	41	19	27
	1200	1290	1200	170	41	19	27
	1500	1590	1500	170	41	19	27
	1800	1890	1800	170	41	19	27
PVDF	700	810	700	170	41	19	26
	1000	1100	1000	170	41	19	26
	1200	1300	1200	170	41	19	26
	1500	1600	1500	170	41	19	26
	1800	1900	1800	170	41	19	26
SS	700	810	700	170	42	20	27
	1000	1100	1000	170	42	20	27
	1200	1300	1200	170	42	20	27
	1500	1600	1500	170	42	20	27
	1800	1900	1800	170	42	20	27
SS-HV	1000	1300	1025	166	56	28	33

* (Unit: millimeter) Special length is available upon request.

EKİN ENDÜSTRİYEL

MONOPUMP

FLUID TRANSFER PRODUCTS

Flanged Industrial Series

The Flanged Industrial Series is the basis of the Diamond series. The robust cast casings, also in the stainless steel model, with large inspection ports included, make this an ideal product for the toughest applications. The Diamond DN and JN series are the best solution for a wide range of fluid pumping industries. They are synonymous with sturdiness, reliability, performance and application flexibility. Available with UNI, DIN and ANSI flanged and GAS BSP threaded connections.

The drive system is coupled directly to the pump by means of a flange. This solution is extremely economical and compact, considerably reduces installation costs and simplifies maintenance. The forces generated by the hydraulic part are supported by the drive system itself.

The drive is connected to the free bare shaft via a flexible coupling. This solution is the best solution in terms of performance and durability. All the forces generated by the pump are absorbed by the bearings. The bearing unit of our design.

DN Series

JN Series

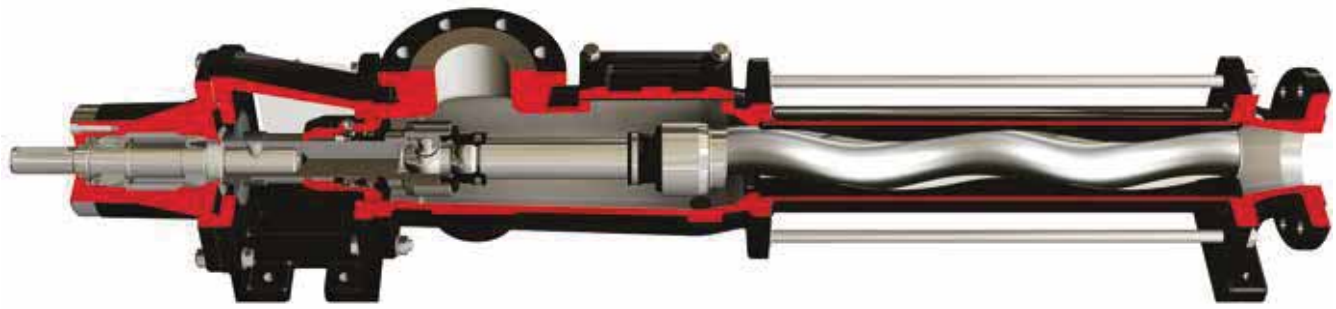

Hopper Pumps

The open hopper pumps with hydraulic auger feed screw are ideal for handling high-consistency materials with a low degree of flowability and high solid content. They are available in 7 different construction types, each with different screws and hoppers based on the type of product to be pumped. All pumps can be made with a close coupled arrangement or a bearing unit arrangement and free bare shaft (JH SERIES, JHS SERIES, JHP SERIES, JHB SERIES and JHSB SERIES) excepting the DHE SERIES which has a built-in gear motor.

DH Series

Standard model equipped with rectangular hopper and an auger feed screw that moves the product to the hydraulic part. The length can be adapted to suit the application. Suitable for pumping materials with low flow-ability and up to 18% solids content which do not create or have a tendency to bridge.

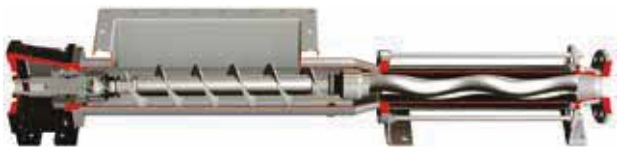

DHE Series

This model has a large eccentric hopper, with integrated trolley, ideal for the wine industry in conjunction with destemmers-crusher. For pumping crushed grapes with or without stems. Extremely compact standard construction with all parts made from AISI 304 stainless steel.

The worm gear motor significantly reduces the pump's footprint. The pump is supplied with a safety mesh on the hopper, protection guard for the drive system and a large handle that can accommodate electric panels and inverters. It can be supplied with a level probe on the hopper for automatic shutdown of the pump.

DHS Series

This model features a rectangular hopper and enlarged auger feed screw that moves the product to the hydraulic part. The length can be adapted to suit the application.
Suitable for pumping high viscosity materials with low flow-ability and up to 28% solids content which do not tend to bridge. The screw drive shaft features a special integrated joint protection.

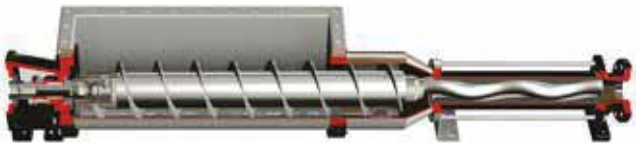

Hopper Pumps

DHP Series

Model fitted with wide hopper, single bridge breaker shaft and auger feed screw that moves the product to the hydraulic part. Easy handling of materials with a low degree of flow ability and prone to bridging. Particularly suitable for easily compressible, large mixtures or solid materials such as whole fruits and vegetables. Ideal for food applications such as grapes, whole fresh grapes, chopped tomatoes or doughs for the confectionery industry. Standard AISI 304 or AISI 316 stainless steel construction. No dead zones and easy to clean design.

DHB Series

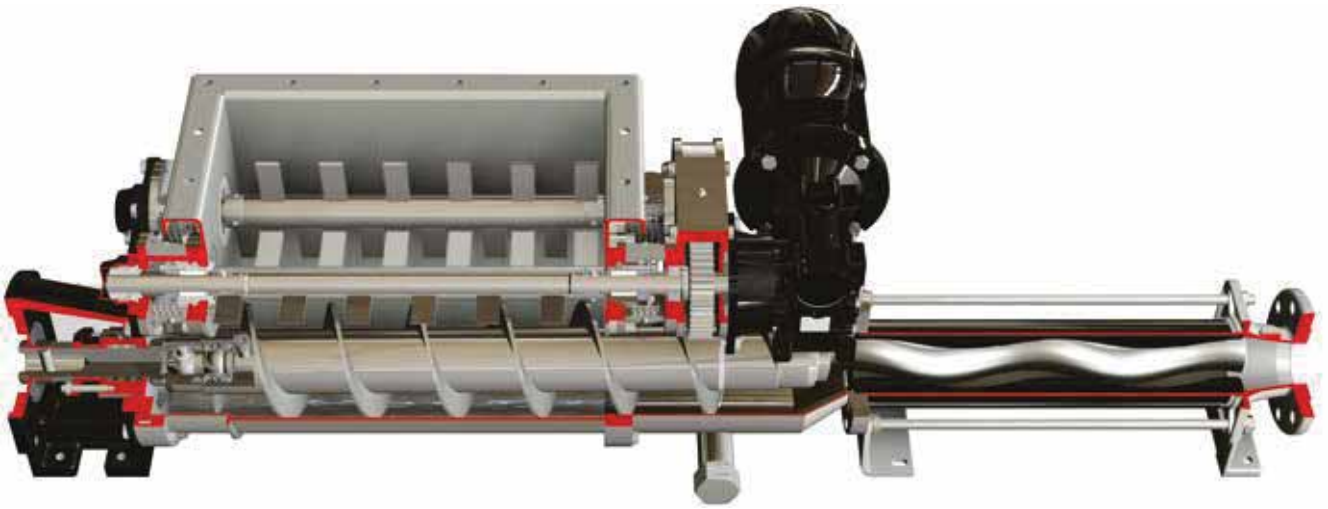

This model features a hopper with double bridge breaker shaft and an enlarged auger feed screw that moves the product to the hydraulic part. The length can be adapted to suit the application. Suitable for pumping highly viscous, non-flowing materials with up to 35% solids content with blocks that tend to bridging.
The screw drive shaft features a special integrated joint protection.

Hopper Pumps

DHSB Series (DHS with “B” Module)

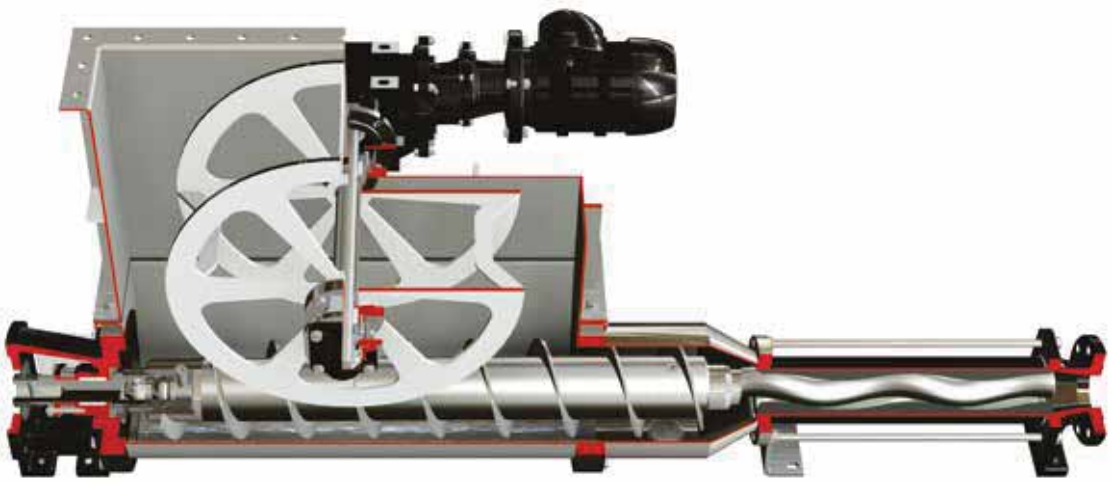

This model features a rectangular hopper and an enlarged auger feed screw that moves the product to the hydraulic part. The hopper is fitted with a “B” Module which features a special wheel device that feeds the screw to prevent bridging and increase flow ability of the plastic or pseudo plastic materials. Suitable for pumping non-flowing materials with up to 40% solids content with blocks that tend to bridging.

It is particularly effective in pumping products that tend to plasticize. The screw drive shaft features a special integrated joint protection.

DHS-T Series

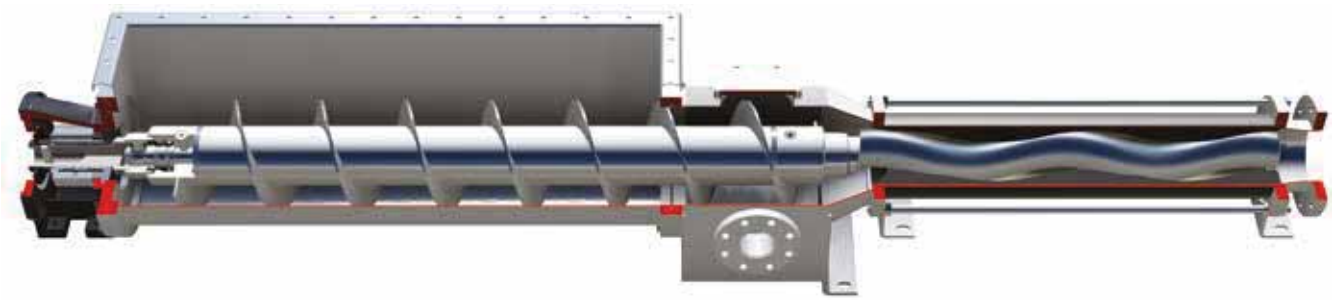

This model features a rectangular hopper and an enlarged auger feed screw that moves the product to the hydraulic part. It is designed for the Biogas sector for pumping silage with the injection of phase liquid at the inlet to increase pump-ability of the solids. The separate inlet provides the connections for the injection of liquids and has a rectangular bottom for collecting any stones that might enter the hopper and be conveyed away by the screw. This avoids damage to the hydraulic section. Moreover, a large additional inspection port is provided with quick couplings for easy removal of solid deposits from the inlet.

Vertical Series

Dv Series “Short Version”

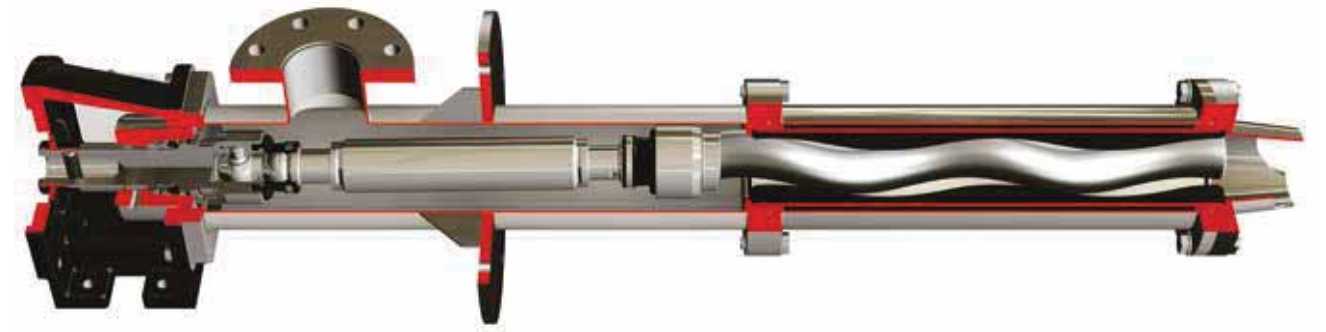

The Vertical series is the ideal solution for pumping viscous or non-viscous, abrasive and aggressive materials from tanks and wells. These pumps are available with UNI, DIN and ANSI and GAS BSP discharge flanged connections; whereas the liquid suction port is designed specifically for priming the product in which it is immersed. The length can be adapted to suit the installation requirements. The stainless steel version (AISI 304 or AISI 316) is supplied with a stator jacket as standard to prevent corrosion of the stator.

Dv Series “Long Version”

There are two standard configurations: the short version and the long version. The difference is in the installation length with which they are constructed. The short version is compact robust and very easy to install. Whereas the long version is ideal for installation in deep wells or tanks and feature a number of dedicated optimizations such as the removable inlet for easy maintenance of the rotor, stator and coupling. A fundamental feature is the downhole plate with clamping cone to make the pump extremely stable and vibration-free even in extreme conditions of use.

They are always constructed in the close-coupled version.

Hygienic Series

The sanitary pump series is state of the art and perfect for food, pharmaceutical, chemical and cosmetic industries. The complete sanitary design, in compliance with EHEDG and 3A standards, ensure maximum sanitization. These pumps are top rated for “Clean in Place” and “Sterilisation in Place” procedures. The geometry of the pumps is designed specifically to allow complete draining and avoid dead zones. Each single component is manufactured with the utmost attention to finishing details and is thoroughly cleaned.

As well as the parts that come into contact with the product, the block construction and base (when requested) are also made of stainless steel (standard in AISI 304).

The available fittings include DIN 11851, DIN 11864, Clamp ISO 2852, Clamp ASME-3A, Clamp DIN 32676, RJT, SMS 1145 and lastly Garolla and Macon fittings for the wine industry.

The complete range of pumps can be manufactured with block construction (DXO SERIES and DXC SERIES) or bearing unit and free bare shaft (JXO SERIES, JXC SERIES).

DXO Series

The DXO series is a hygienic pump with open joint. The design of its casing and rotating parts ensures that they completely free of stagnation points and dead zones, making it the absolute best for sanitary applications. The pin-type joint has been suitably sized to ensure a long life. Lubrication of the joint is guaranteed by the actual product thanks to its open design, consequently it is suitable for non-abrasive fluids. Performance improves considerably when pumping lubricants.

DXC Series

The DXC series is a hygienic pump with closed pin joint (standard to the DN series) and ideal for abrasive sanitary applications. In all other respects it maintains all the sanitary features of the DXO series.
. Lubrication of the pin is independent of the pumped product, consequently it is also suitable for abrasive fluids.

Wobble Pump Series

The wobble series of pumps is the ideal solution for applications requiring an extremely compact and versatile product. The small number of parts used in its construction makes maintenance simple and economical. It can be used in a broad range of industries because of its capacity to pump viscous products containing solids in the fluid or slightly abrasive products. It is ideal for those seeking an economical yet efficient product, as its boasts an unparalleled cost/benefits ratio. Pumping is pulsefree and the centrifugal effect is almost totally absent even at high speeds. The absence of dead zones inside the pump makes it suitable for use in the food industry as well.

The R and RL series pumps are all constructed with robust cast iron and stainless steel (AISI 304 and AISI 316) bodies made with lost wax casting technology.

Available with threaded GAS BSP fittings, and on request we can supply DIN 11851 type adapters.

RL Series

The RL series is an extremely compact product thanks to the integrated pump-electric motor construction. The patented pin joint of the Diamond series ensures high reliability. The support between the body pump and drive unit has been eliminated which makes the pump more compact and easier to maintain.

RJL Series

The RJL series is based on the same technology as the RL series. The difference lies in its use of a bearing unit and free bare shaft. The RJL series can be connected to the drive with a flexible coupling. The ideal solution for the supply of a bare shaft pump.

The bearings ensure the highest reliability in all operating conditions.

Wobble Pump Series

RFL Series

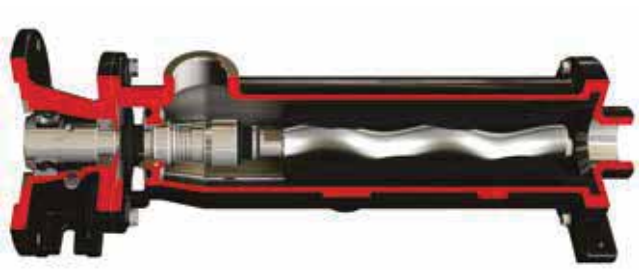

The RFL series is based on the same technology as the RL series. The difference lies in its use of a bearing unit with plug-in shaft. The RFL series can be flanged directly to the drive. This is the ideal solution for the supply of a pump without a drive system, while maintaining compactness and easy installation. The bearings ensure the highest reliability in all operating conditions.

R Series

The R series is the most compact product available due to its integrated pump-electric motor construction and an extremely short hydraulic section. It uses a cross joint, is reliable and easy to maintain. The support between the body pump and drive unit has been eliminated which makes the pump more compact and easier to maintain.

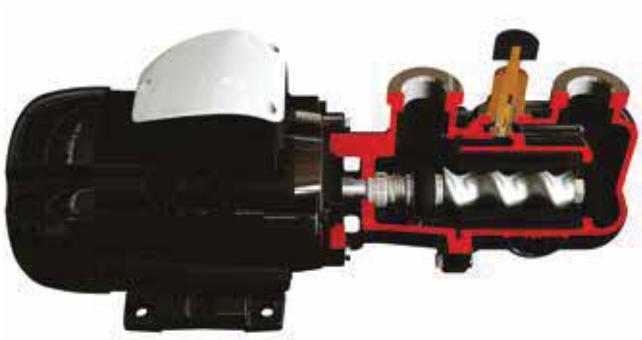

RF Series

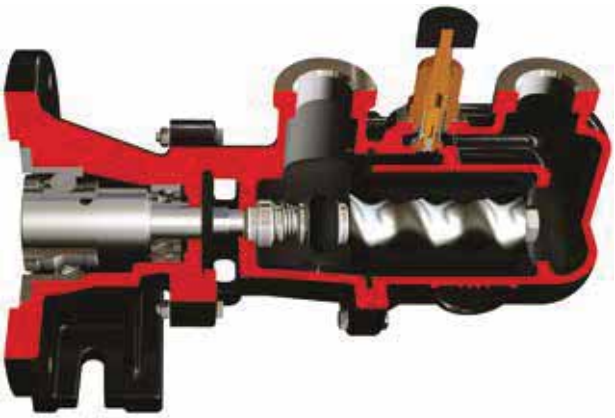

The RF series is based on the same technology as the R series. The difference lies in its use of a bearing unit with plug-in shaft. The RF series can be flanged directly to the drive. This is the ideal solution for the supply of a pump without a drive system, while maintaining compactness and easy installation. The bearings ensure the highest reliability in all operating conditions

EKİN ENDÜSTRİYEL

CENTRIFUGAL
BLOWERS

FLUID TRANSFER PRODUCTS

MIT Blowers

Blowers are installation equipment that provides the transfer of air in the emitted environment at high or low pressure and rotates the fan with the force received from the motor.

The fan in the blowers rotates by vacuuming the air in the suction section, the air trapped inside is then pushed towards the outlet side. Blowers are often used to move air.

MIT branded blowers offer the most reliable service for your application areas in terms of size, performance and technology.

Why Should I Use MIT Blowers?

MIT centrifugal blowers have a maintenance-free, highly efficient fan, electric motor and various mounting (horizontal and vertical) shapes.

They provide high pressure and vacuum. Can produce oil-free air. Easy to install and maintenance-free AC motor.

Advantages of MIT Centrifugal Blowers

MIT branded blowers are designed to provide the best service to our valued customers with our expert engineer staff. We offer you the most efficient blower with the advantage of MIT brand below.

- It provides a maximum flow rate of 2500 m^3/ h.
- Creates a maximum pressure of 570 mbar.
- High temperature operation (maximum: 70-80 °C).
- Provides a quiet working environment (50-85 dBA).
- Environment-friendly thanks to the lack of oil-free operation and no pollution level.
- Vibration is minimized with dynamic balance adjustment.
- Easy installation. Suitable for horizontal and vertical installation.
- Swedish SKF or Japanese NSK bearings are used, ensuring efficient and long-lasting use.
- Provides trouble-free operation for 3-5 years under normal conditions.

What Are The Types Of Blowers?

Single Stage Blowers

Single-stage blowers are available in a range of 55-1050 m^3/h flow rates, 0-460 mbar pressures and 0.25 to 5.5 kW range of motor power.

Double Stage Blowers

Double-stage blowers are available in a range of 88-2050 m^3/h flow rates, 0-570 mbar pressures and 0,7-25 kw.

How to Select a Blower?

The most important information needed for blower selection (for air) is listed as follows.

- Air flow rate required (m^3/h, Nm^3/h).
- The positive pressure of the blower to be used for air transfer (such as mbar, bar, mSS).
- Vacuum value of the blower to be used for vacuum (mbar, bar, etc.).
- Ambient temperature.

Working Principle of MIT Centrifugal Blower

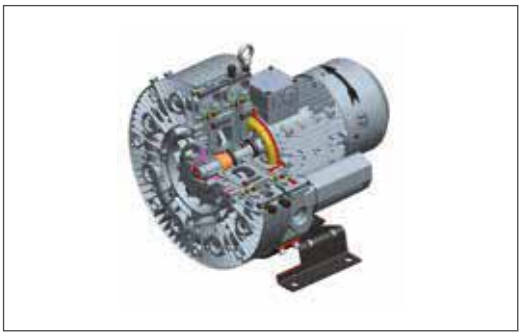

Blowers increase the pressure of the absorbed gas by a series of vortex motions formed by the centrifugal movement of the impeller. When the impeller is rotating, the channels in the impeller push the air forward by the centrifugal movement and a helical movement occurs. During this movement, the gas is continuously compressed along the channel and the pressure increases linearly. The pressurized air is transferred from the outlet duct of the blower to the installation to be used.

What are the Blower Usage Areas?

Blowers are used in various processes such as food, transportation, granite carrier.

Blowers, other than vacuum pumps are effectively used in food washing, transport equipment, powder granur conveyor, suction equipment, industrial dust extraction, paper handling, degassing, bottle filling machines, automatic filling machines, paper cutting industry, printing paper handling process, dust removal equipment production, car washing, treatment plants, whirlpool, bottle drying, vegetable fruit washing and heating installations.

Performance Table

Each blower has different operating values depending on the motor power.

Model						Δp mBar	0	50	100	150	200	250	300	350	400	450	500	550
	Electric Motor (kW)	Outlet Line	Weight (kg)	Stage	Max. Vacuum mBar	Max. Pressure mBar	Flow Rate (m^3/h)											
B1TT-102	0,25	1"	7	Single	-100	100	55	25										
B2TT-104	0,40	1 1/4"	11	Single	-120	130	80	50	28									
B2CC-207	0,7	1 1/4"	14	Double	-210	240	88	68	54	41	30							
B3TT-105	0,55	1 1/4"	12	Single	-120	130	100	77	50									
B3TT-107	0,7	1 1/4"	13	Single	-150	170	100	77	50	20								
B4TT-107	0,7	1 1/2"	14	Single	-120	120	145	111	80									
B4TT-108	0,85	1 1/2"	15	Single	-160	160	145	111	80	55								
B4TT-113	1,3	1 1/2"	16	Single	-170	200	145	111	80	55	30							
B4CC-216	1,6	1 1/2"	24	Double	-280	280	150	135	120	105	93	78						
B4CC-222	2,2	1 1/2"	27	Double	-330	440	150	135	120	105	93	78	64	50	35			
B5TT-116	1,6	2"	21	Single	-200	190	210	178	145	110								
B5TT-122	2,2	2"	25	Single	-220	270	210	178	145	110	87	58						
B5CC-230	3,0	2"	39	Double	-340	410	230	205	182	167	148	130	115	100	88			
B5CC-240	4,0	2"	43	Double	-390	490	230	205	182	167	148	130	115	100	88	60		
B6TT-122	2,2	2"	27	Single	-230	250	270	240	200	160	118							
B6TT-130	3,0	2"	32	Single	-270	310	270	240	200	160	118	78						
B7TT-122	2,2	2"	29	Single	-210	200	318	278	238	200								
B7TT-130	3,0	2"	34	Single	-270	290	318	278	238	200	170	140						
B7TT-140	4,0	2"	42	Single	-290	330	318	278	238	200	170	140	110	75				
B7TC-130	3,0	2"	43	Single	-220	220	420	355	295	244	200							
B7TC-140	4,0	2"	43	Single	-260	310	420	355	295	244	200	160	120					
B7CC-222	2,2	2"	42	Double	-220	210	320	300	282	264	250							
B7CC-230	3,0	2"	47	Double	-280	260	320	300	282	264	250	235						
B7CC-243	4,3	2"	53	Double	-360	380	320	300	282	264	250	235	218	202				
B7CC-255	5,5	2"	70	Double	-440	500	320	300	282	264	250	235	218	202	184	174	158	
B7CC-275	7,5	2"	77	Double	-440	570	320	300	282	264	250	235	218	202	184	174	158	140
B8TT-155	5,5	2 1/2"	65	Single	-300	320	530	465	420	380	348	305	275					
B8TT-175	7,5	2 1/2"	68	Single	-320	380	530	465	420	380	348	305	275	240	180			
B8TC-175	7,5	2 1/2"	74	Single	-270	260	700	615	550	490	448	390						
B8CC-275	7,5	2 1/2"	87	Double	-400	400	520	480	455	440	410	390	370	350	330			
B8CC-2110	11	2 1/2"	127	Double	-280	370	900	800	720	650	580	515	440	350				
B9TT-1250	12,5	4"	132	Single	-280	270	1050	980	900	830	770	695	695					
B9TT-1850	18,5	4"	140	Single	-340	460	1050	980	900	830	770	695	695	630	520	480		
B9CC-2225	25,0	4"	235	Double	-310	280	2050	1850	1800	1750	1500	1420						

MIT B1TT-102 Series Technical Data Sheet

MIT Blower Performance Curves

Vacuum Selection Curve

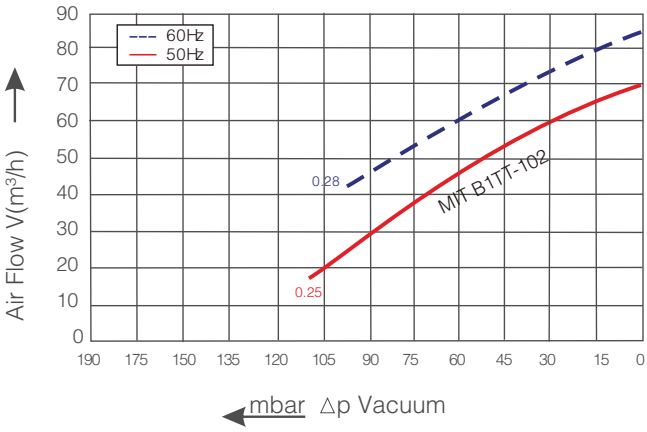

Compressor Selection Curves

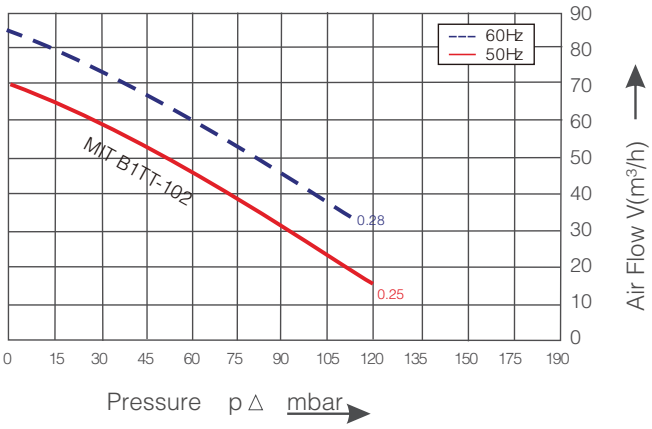

MIT Blower Technical Drawing

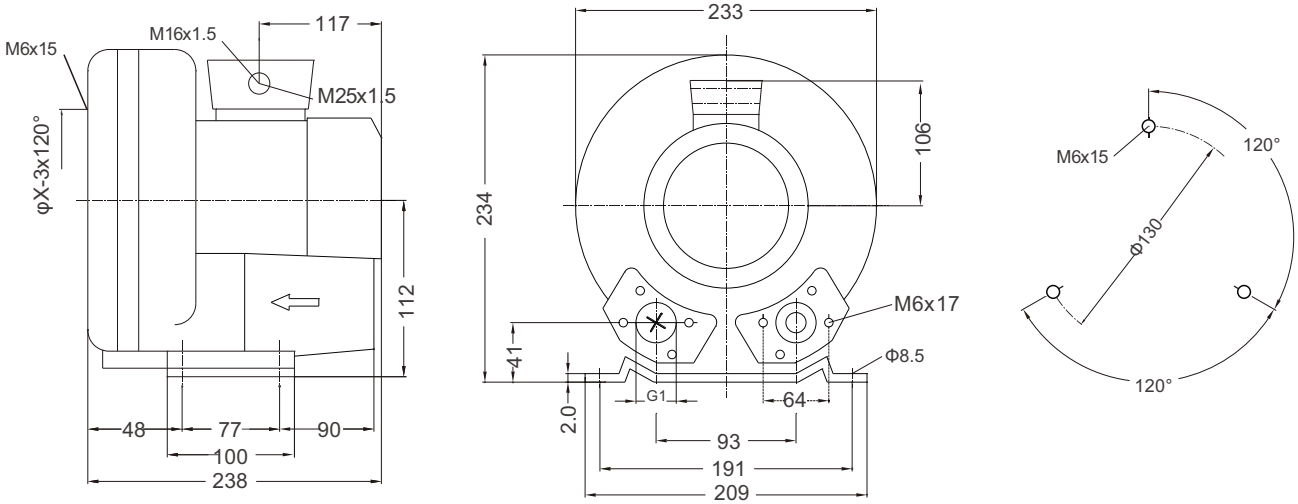

MIT BLOWER PARAMERTER									
Model	Frequency Hz	Power kW	Voltage V	Current A	Air Flow m³/h	Pressure		Noice dB (A)	Weight kg
						Vacuum mbar	Head mbar		
3~ 50/60Hz IP54 Koruma Sınıfı F									
MIT B1TT-102	50	0,25	220-240 △ 345-415Y	1,15 △ /0,75	70	-110	120	48	7
MIT B1TT-102	60	2,28	220-275 △ 380-480Y	1,2 △ /0,75	85	-100	110	50	7

MIT Blowers have been tested under the following condition:
Performance tables were created by testing it with the aspiration of air at a temperature of 15 °C under 1 atm pressure.
If the temperature around the aspirated air and the blower is not more than 25 °C, the total pressure differences are as shown in the performance tables.
A deviation of +- 10% in values may occur.

MIT B2TT-104 Series Technical Data Sheet

MIT Blower Performance Curves

Vacuum Selection Curve

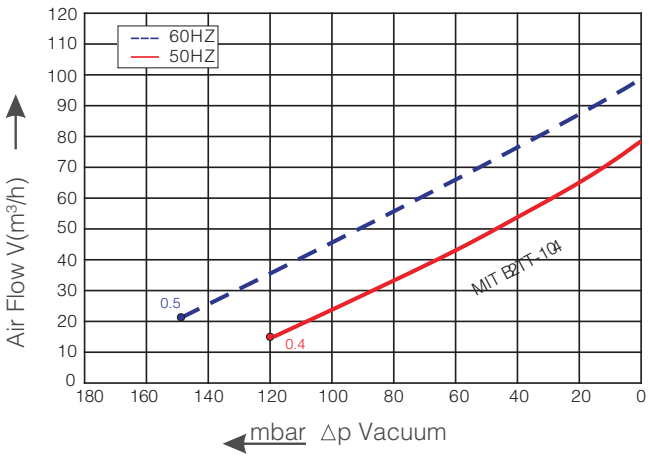

Compressor Selection Curves

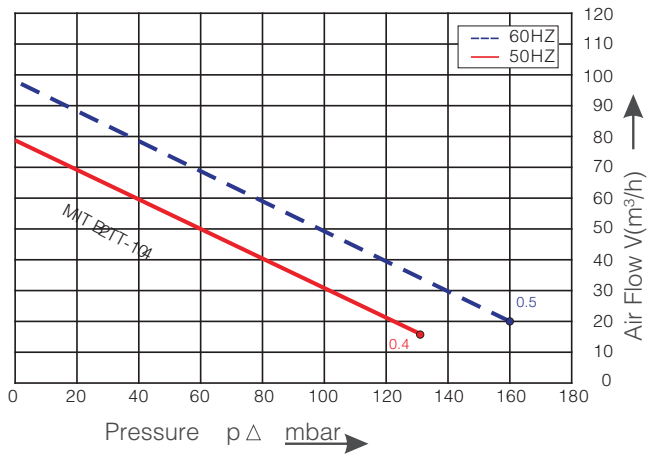

MIT Blower Technical Drawing

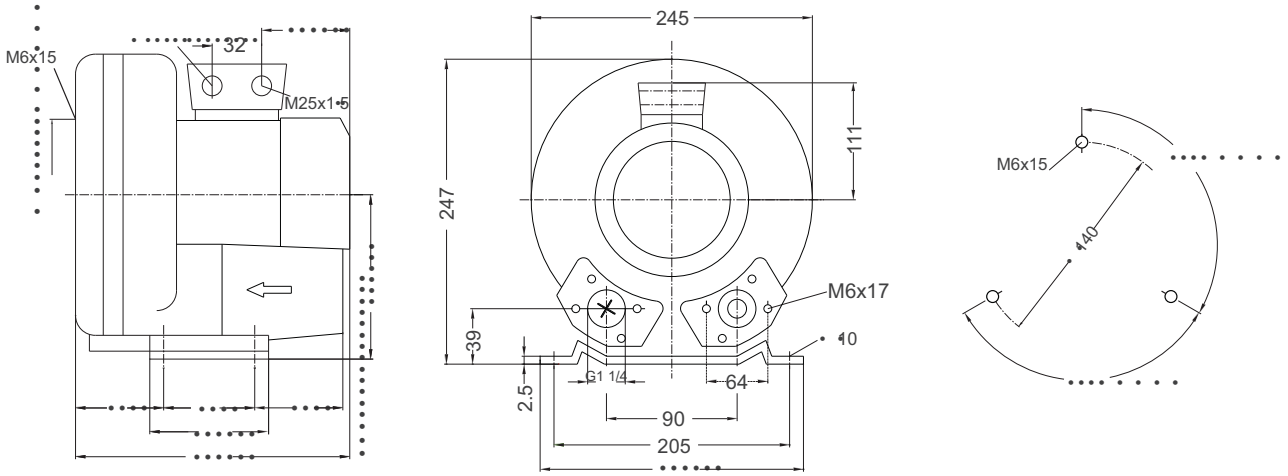

MIT BLOWER PARAMERTER									
Model	Frequency Hz	Power kW	Voltage V	Current A	Air Flow m³/h	Pressure		Noice dB (A)	Weight kg
						Vacuum mbar	Head mbar		
3~ 50/60Hz IP54 Protection Class F									
MIT B2TT-104	50	0,4	200-240△345-415Y	2.6 △1.5Y	80	-120	130	53	10
MIT B2TT-104	60	0,5	220-275△380-480Y	2.6 △1.5Y	98	-150	160	56	10

MIT Blowers have been tested under the following condition:
Performance tables were created by testing it with the aspiration of air at a temperature of 15 °C under 1 atm pressure.
If the temperature around the aspirated air and the blower is not more than 25 °C, the total pressure differences are as shown in the performance tables.
A deviation of +- 10% in values may occur.

MIT B3TT-105 Series Technical Data Sheet

MIT Blower Performance Curves

Vacuum Selection Curve

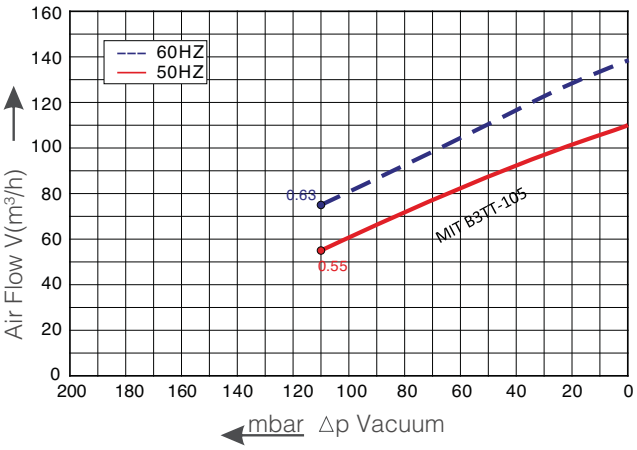

Compressor Selection Curves

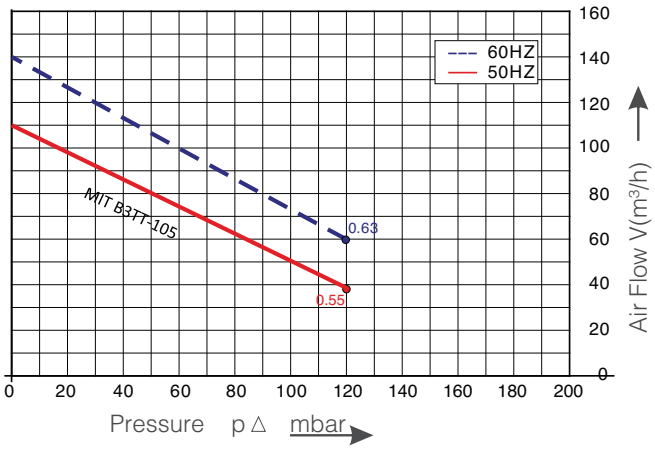

MIT Blower Technical Drawing

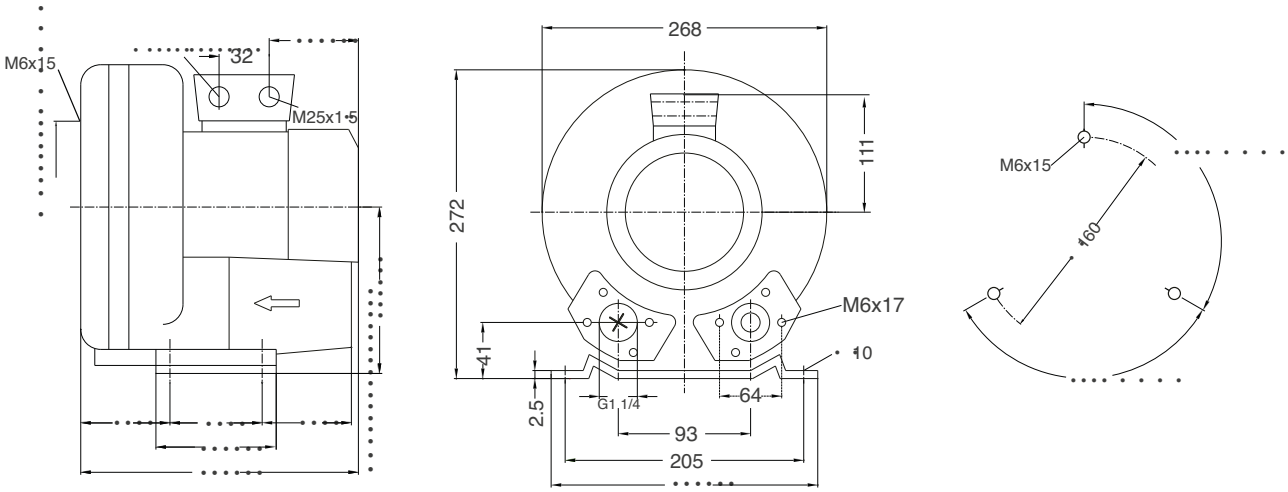

MIT BLOWER PARAMERTER									
Model	Frequency Hz	Power kW	Voltage V	Current A	Air Flow m³/h	Pressure		Noice dB (A)	Weight kg
						Vacuum mbar	Head mbar		
3~ 50/60Hz IP54 Protection Class F									
MIT B3TT-105	50	0,55	200-240△345-415Y	2.4 △1.7Y	110	-110	120	55	12
MIT B3TT-105	60	0,63	220-275△380-480Y	2.6 △1.5Y	140	-110	120	58	12

MIT Blowers have been tested under the following condition:
Performance tables were created by testing it with the aspiration of air at a temperature of 15 °C under 1 atm pressure.
If the temperature around the aspirated air and the blower is not more than 25 °C, the total pressure differences are as shown in the performance tables.
A deviation of +- 10% in values may occur.

MIT B3TT-107 Series Technical Data Sheet

MIT Blower Performance Curves

Vacuum Selection Curve

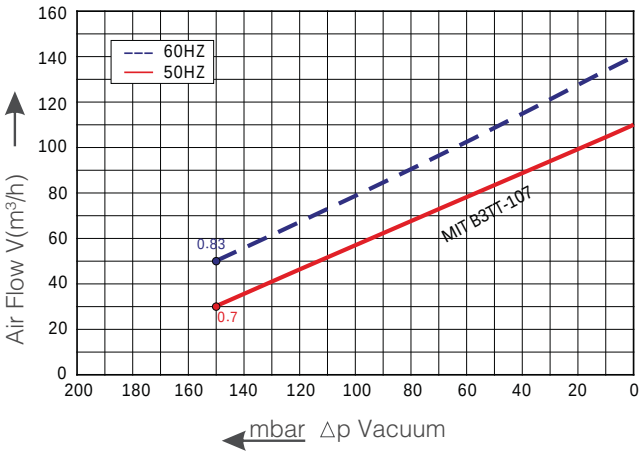

Compressor Selection Curves

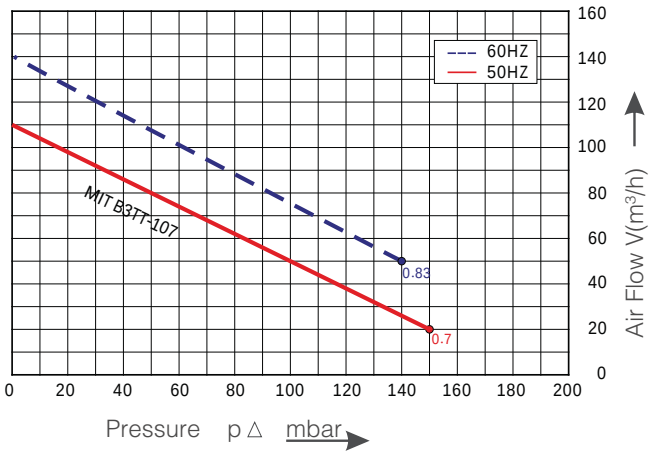

MIT Blower Technical Drawing

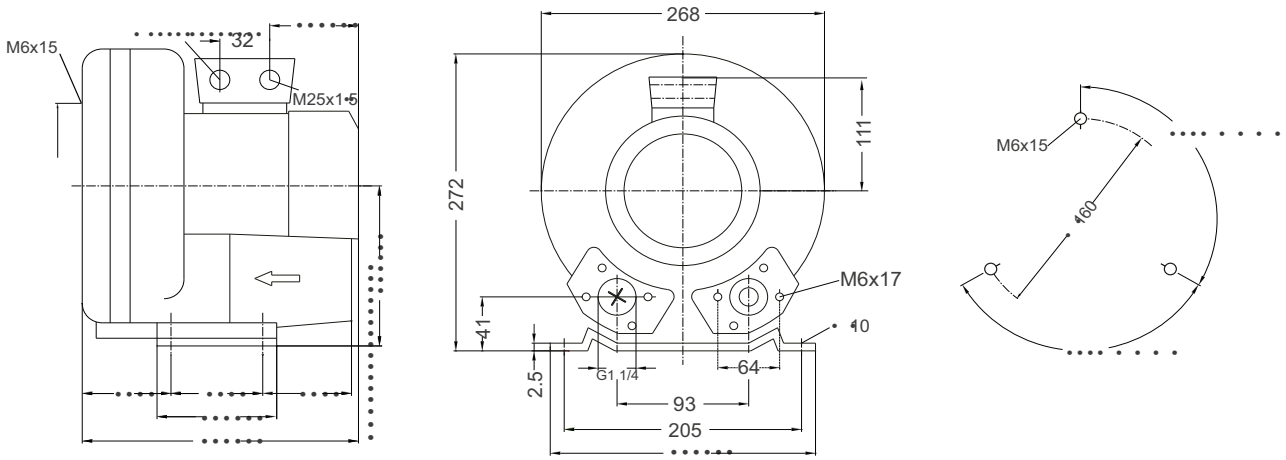

MIT BLOWER PARAMERTER									
Model	Frequency Hz	Power kW	Voltage V	Current A	Air Flow m³/h	Pressure		Noice dB (A)	Weight kg
						Vacuum mbar	Head mbar		
3~ 50/60Hz IP54 Protection Class F									
MIT B3TT-107	50	0,7	200-240△ 345-415Y	3.8△ 2.2Y	110	-150	150	55	13
MIT B3TT-107	60	0,83	220-275△ 380-480Y	3.75△ 2.15Y	140	-150	140	58	13

MIT Blowers have been tested under the following condition:
Performance tables were created by testing it with the aspiration of air at a temperature of 15 °C under 1 atm pressure.
If the temperature around the aspirated air and the blower is not more than 25 °C, the total pressure differences are as shown in the performance tables.
A deviation of +- 10% in values may occur.

MIT B4TT-107 Series Technical Data Sheet

MIT Blower Performance Curves

Vacuum Selection Curve

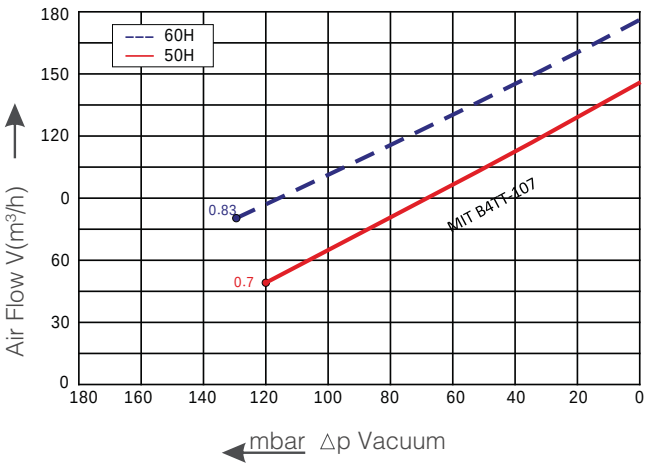

Compressor Selection Curves

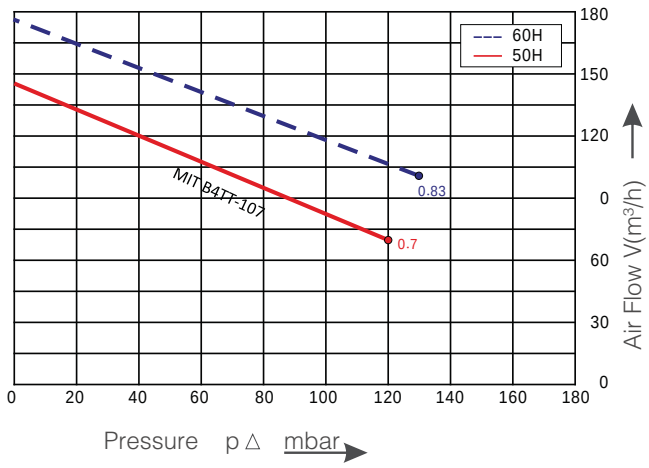

MIT Blower Technical Drawing

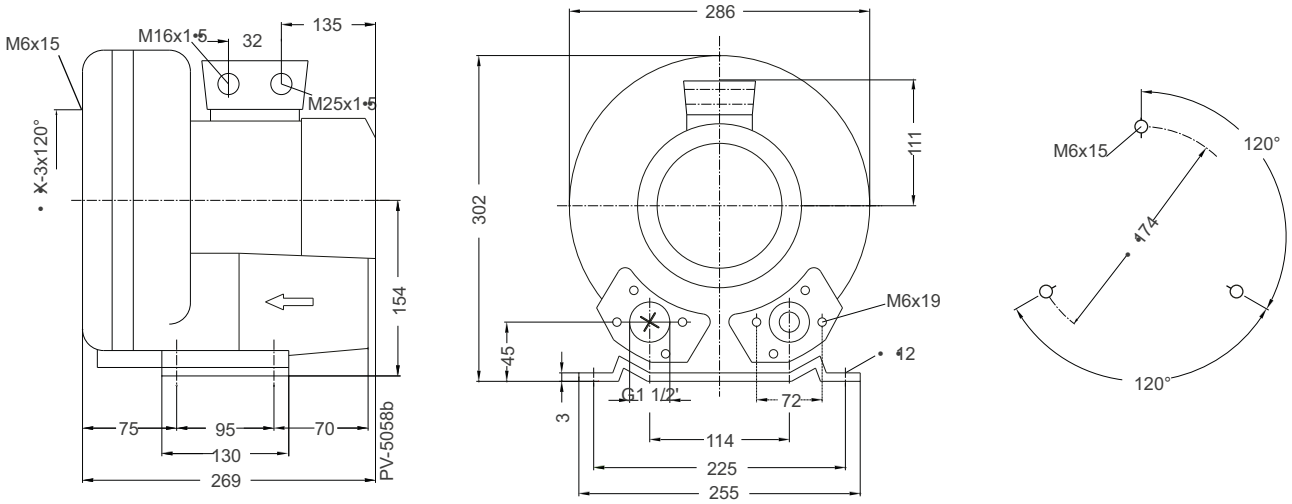

MIT BLOWER PARAMERTER									
Model	Frequency Hz	Power kW	Voltage V	Current A	Air Flow m³/h	Pressure		Noice dB (A)	Weight kg
						Vacuum mbar	Head mbar		
3~ 50/60Hz IP54 Protection Class F									
MIT B4TT-107	50	0,7	200-240△345-415Y	3.8 △2.2Y	145	-120	120	63	13
MIT B4TT-107	60	0,83	220-275△380-480Y	3.75 △2.15Y	175	-130	130	64	13

MIT Blowers have been tested under the following condition:
Performance tables were created by testing it with the aspiration of air at a temperature of 15 °C under 1 atm pressure.
If the temperature around the aspirated air and the blower is not more than 25 °C, the total pressure differences are as shown in the performance tables.
A deviation of +- 10% in values may occur.

MIT B4TT-108 Series Technical Data Sheet

MIT Blower Performance Curves

Vacuum Selection Curve

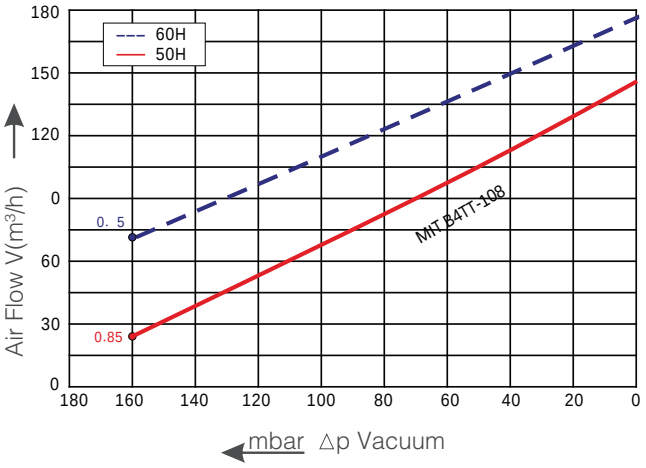

Compressor Selection Curves

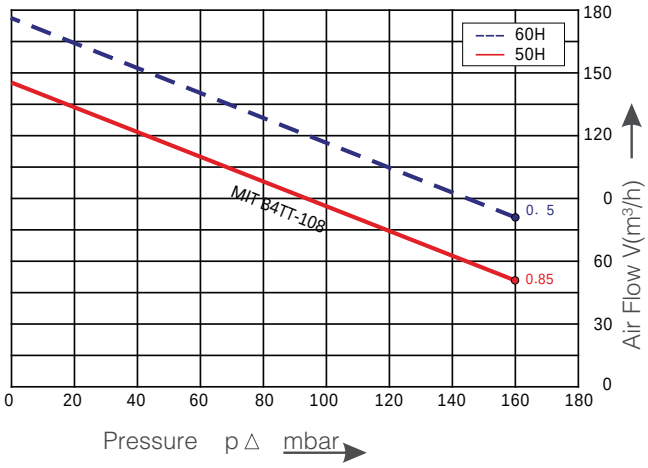

MIT Blower Technical Drawing

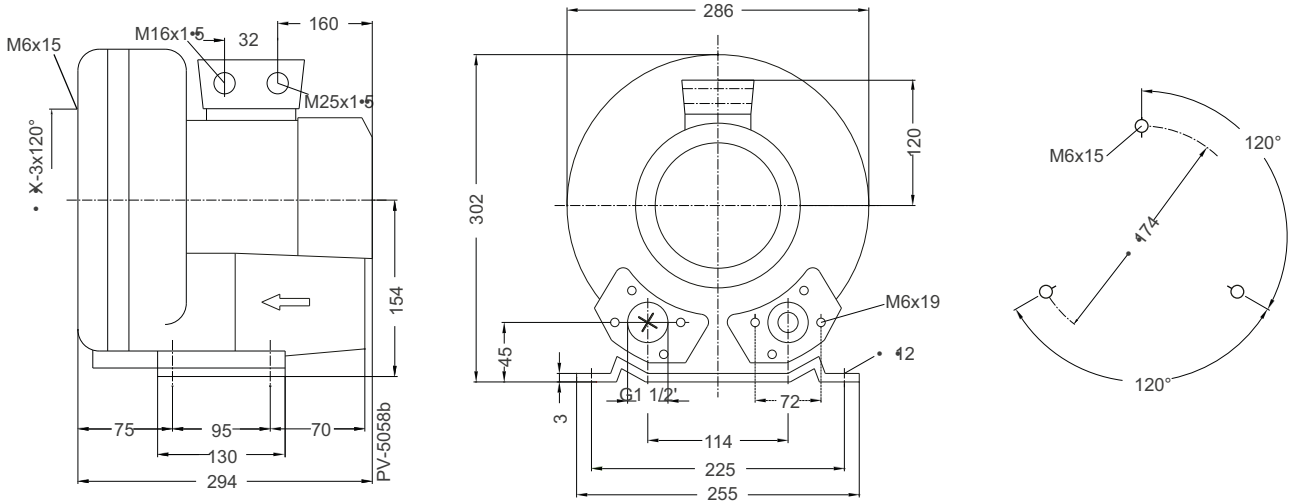

MIT BLOWER PARAMERTER									
Model	Frequency Hz	Power kW	Voltage V	Current A	Air Flow m³/h	Pressure		Noice dB (A)	Weight kg
						Vacuum mbar	Head mbar		
3~ 50/60Hz IP54 Protection Class F									
MIT B4TT-108	50	0,85	200-240△345-415Y		145	-150	160	63	15
MIT B4TT-108	60	0,95	220-275△380-480Y		175	-160	140	64	15

MIT Blowers have been tested under the following condition:
Performance tables were created by testing it with the aspiration of air at a temperature of 15 °C under 1 atm pressure.
If the temperature around the aspirated air and the blower is not more than 25 °C, the total pressure differences are as shown in the performance tables.
A deviation of +- 10% in values may occur.

MIT B4TT-113 Series Technical Data Sheet

MIT Blower Performance Curves

Vacuum Selection Curve

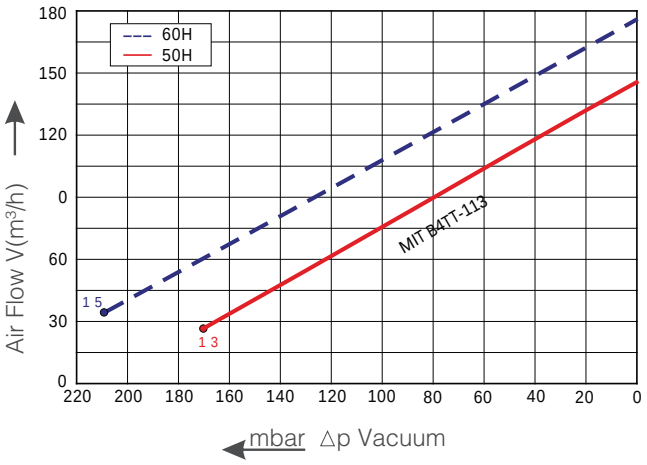

Compressor Selection Curves

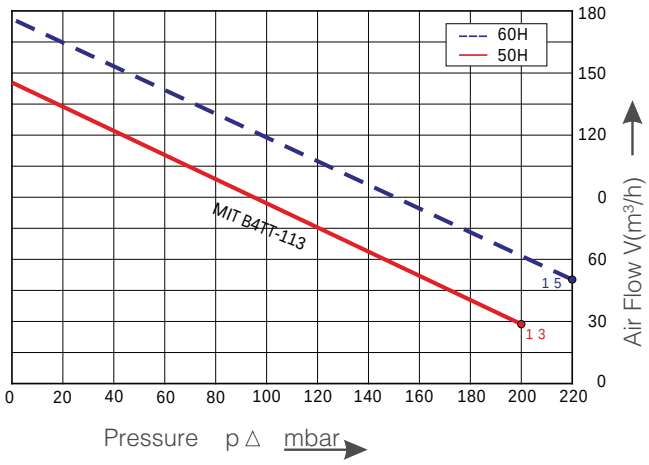

MIT Blower Technical Drawing

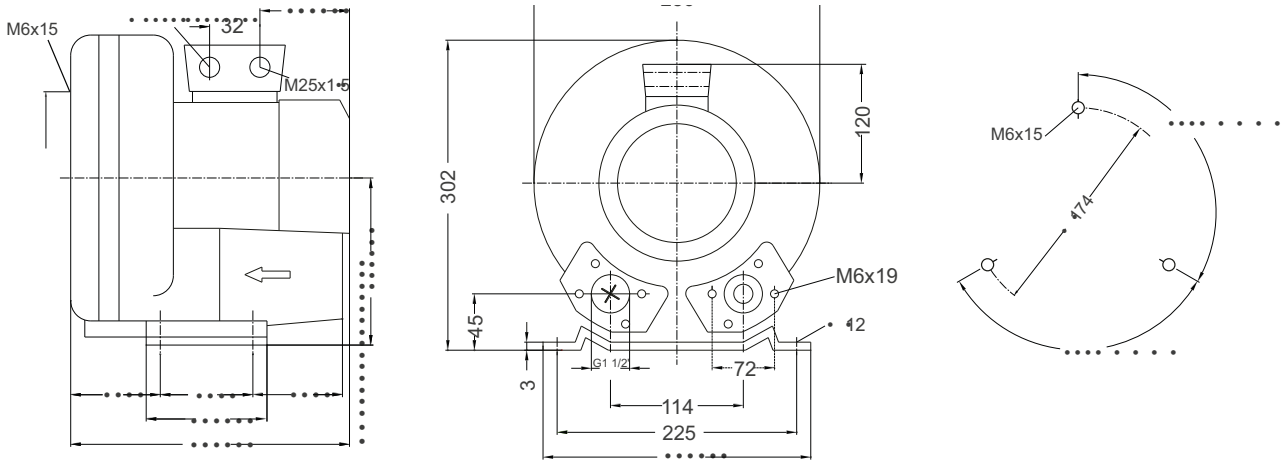

MIT BLOWER PARAMERTER									
Model	Frequency Hz	Power kW	Voltage V	Current A	Air Flow m³/h	Pressure		Noice dB (A)	Weight kg
						Vacuum mbar	Head mbar		
3~ 50/60Hz IP54 Protection Class F									
MIT B4TT-113	50	1,3	200-240△345-415Y	5.7 △3.3Y	145	-170	200	63	16
MIT B4TT-113	60	1,5	220-275△380-480Y	5.7 △3.3Y	175	-210	220	64	16

MIT Blowers have been tested under the following condition:
Performance tables were created by testing it with the aspiration of air at a temperature of 15 °C under 1 atm pressure.
If the temperature around the aspirated air and the blower is not more than 25 °C, the total pressure differences are as shown in the performance tables.
A deviation of +- 10% in values may occur.

MIT B5TT-116 Series Technical Data Sheet

MIT Blower Performance Curves

Vacuum Selection Curve

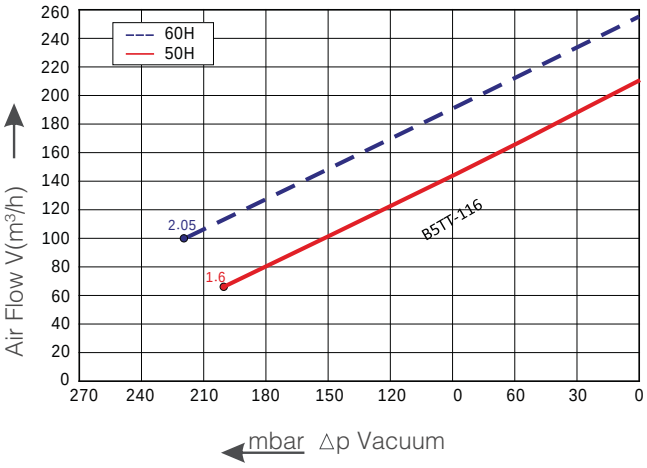

Compressor Selection Curves

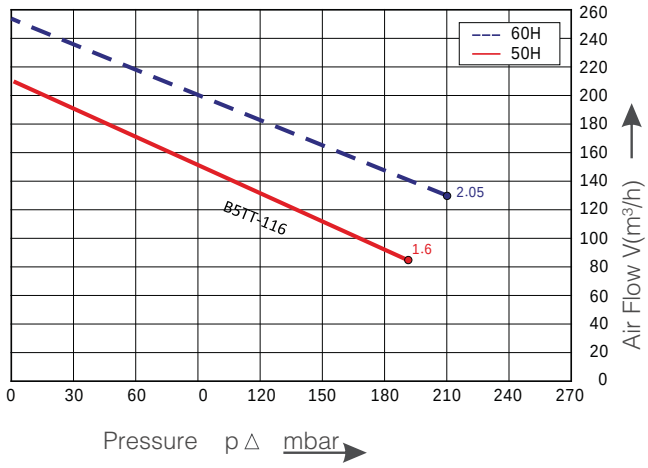

MIT Blower Technical Drawing

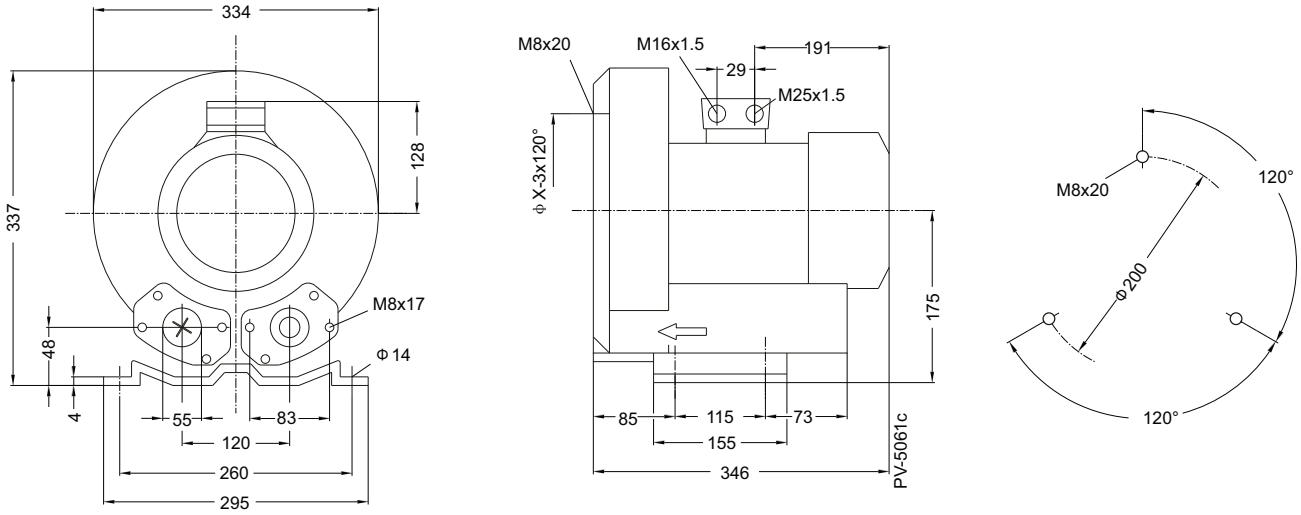

MIT BLOWER PARAMERTER									
Model	Frequency Hz	Power kW	Voltage V	Current A	Air Flow m³/h	Pressure		Noice dB (A)	Weight kg
						Vacuum mbar	Head mbar		
3~ 50/60Hz IP54 Protection Class F									
MIT B5TT-116	50	1,6	200-240Δ 345-415Y	7.5 Δ 4.3Y	210	-200	190	64	21
MIT B5TT-116	60	2,05	220-275Δ 380-480Y	7.6 Δ 4.4Y	255	-220	210	70	21

MIT Blowers have been tested under the following condition:
Performance tables were created by testing it with the aspiration of air at a temperature of 15 °C under 1 atm pressure.
If the temperature around the aspirated air and the blower is not more than 25 °C, the total pressure differences are as shown in the performance tables.
A deviation of +- 10% in values may occur.

MIT B5TT-122 Series Technical Data Sheet

MIT Blower Performance Curves

Vacuum Selection Curve

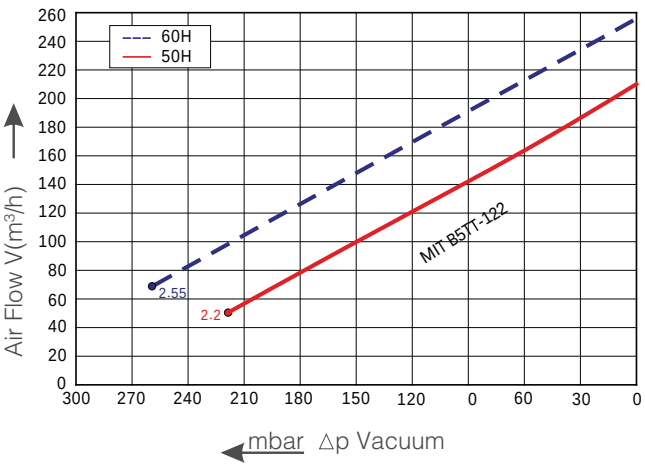

Compressor Selection Curves

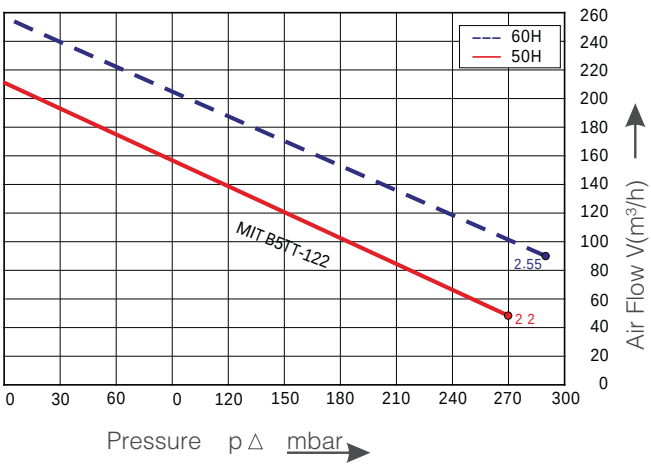

MIT Blower Technical Drawing

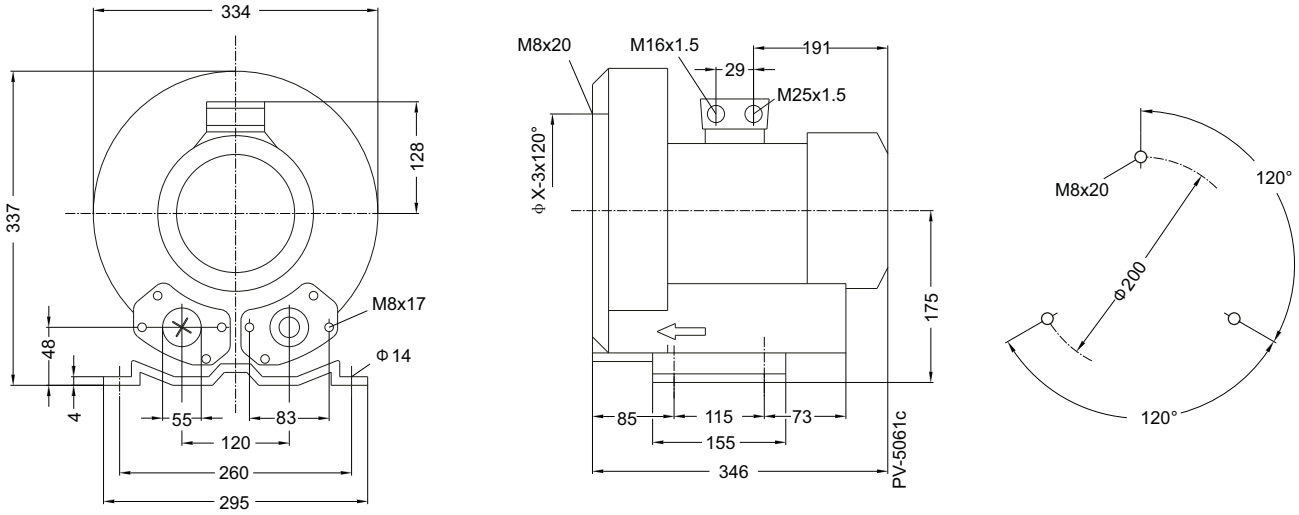

MIT BLOWER PARAMERTER									
Model	Frequency Hz	Power kW	Voltage V	Current A	Air Flow m³/h	Pressure		Noice dB (A)	Weight kg
						Vacuum mbar	Head mbar		
3~ 50/60Hz IP54 Protection Class F									
MIT B5TT-122	50	2,2	200-240Δ345-415Y	9.7 Δ5.6Y	210	-220	270	64	25
MIT B5TT-122	60	2,55	220-275Δ380-480Y	10.7Δ 6.0Y	255	-260	290	70	25

MIT Blowers have been tested under the following condition:
Performance tables were created by testing it with the aspiration of air at a temperature of 15 °C under 1 atm pressure.
If the temperature around the aspirated air and the blower is not more than 25 °C, the total pressure differences are as shown in the performance tables.
A deviation of +- 10% in values may occur.

MIT B6TT-122 Series Technical Data Sheet

MIT Blower Performance Curves

Vacuum Selection Curve

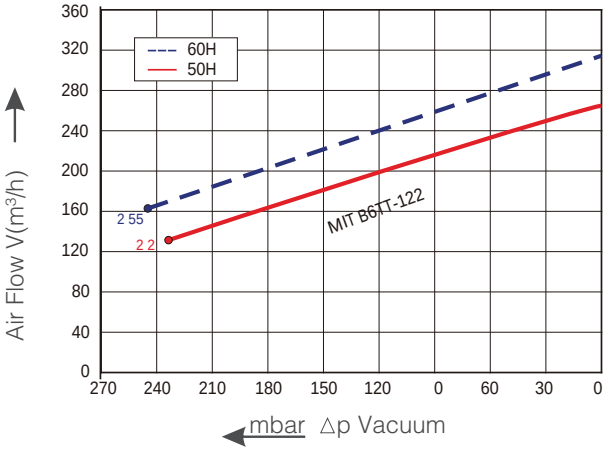

Compressor Selection Curves

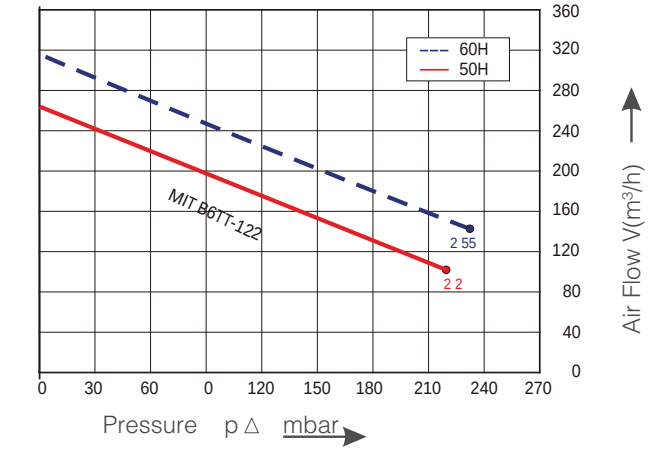

MIT Blower Technical Drawing

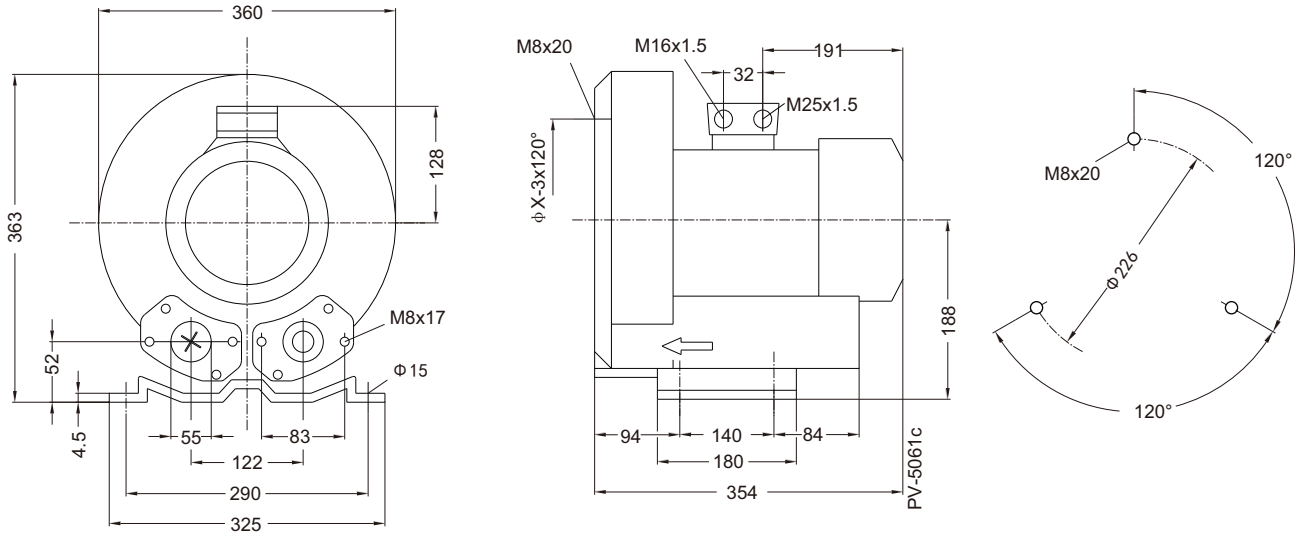

MIT BLOWER PARAMERTER									
Model	Frequency Hz	Power kW	Voltage V	Current A	Air Flow m³/h	Pressure		Noice dB (A)	Weight kg
						Vacuum mbar	Head mbar		
1~ 50/60Hz IP54 Protection Class F									
MIT B6TT-122	50	2,2	200-240 △345-415Y	9.7 △5.6Y	265	-235	220	65	27
MIT B6TT-122	60	2,55	220-275 △380-480Y	10.0△ 5.8Y	315	-245	230	71	27

MIT Blowers have been tested under the following condition:
Performance tables were created by testing it with the aspiration of air at a temperature of 15 °C under 1 atm pressure.
If the temperature around the aspirated air and the blower is not more than 25 °C, the total pressure differences are as shown in the performance tables.
A deviation of +- 10% in values may occur.

MIT B6TT-130 3,0 KW Series Technical Data Sheet

MIT Blower Performance Curves

Vacuum Selection Curve

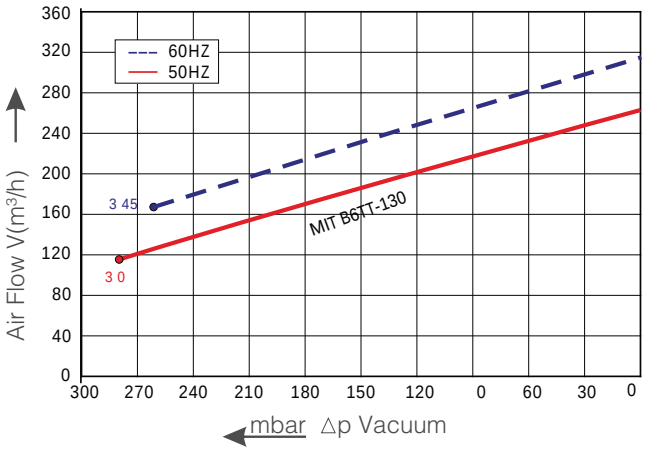

Compressor Selection Curves

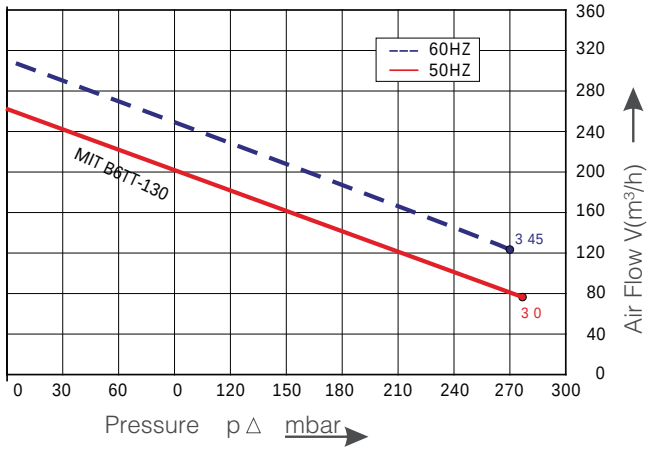

MIT Blower Technical Drawing

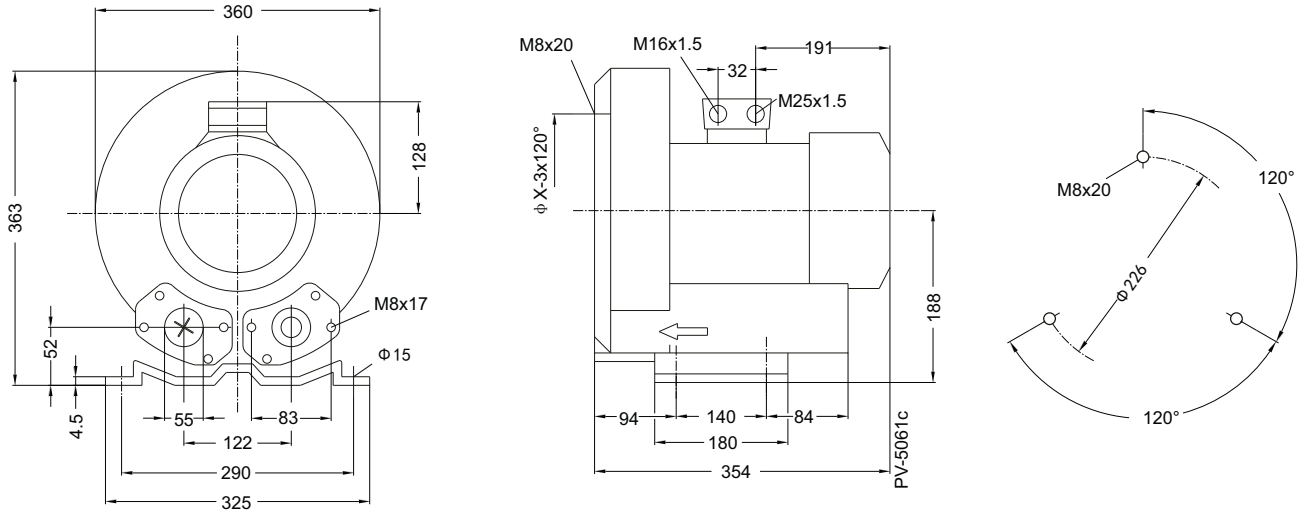

MIT BLOWER PARAMERTER									
Model	Frequency Hz	Power kW	Voltage V	Current A	Air Flow m³/h	Pressure		Noice dB (A)	Weight kg
						Vacuum mbar	Head mbar		
3~ 50/60Hz IP54 Protection Class F									
MIT B6TT-130	50	3,0	200-240△345-415Y	12.5△ 7.2Y	265	-280	280	65	32
MIT B6TT-130	60	3,45	220-275△380-480Y	12.5△ 7.3Y	315	-260	270	71	32

MIT Blowers have been tested under the following condition:
Performance tables were created by testing it with the aspiration of air at a temperature of 15 °C under 1 atm pressure.
If the temperature around the aspirated air and the blower is not more than 25 °C, the total pressure differences are as shown in the performance tables.
A deviation of +- 10% in values may occur.

MIT B7TC-130 Series Technical Data Sheet

MIT Blower Performance Curves

Vacuum Selection Curve

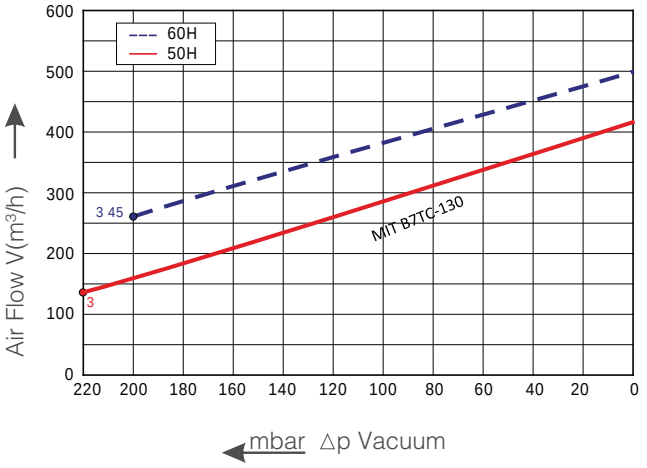

Compressor Selection Curves

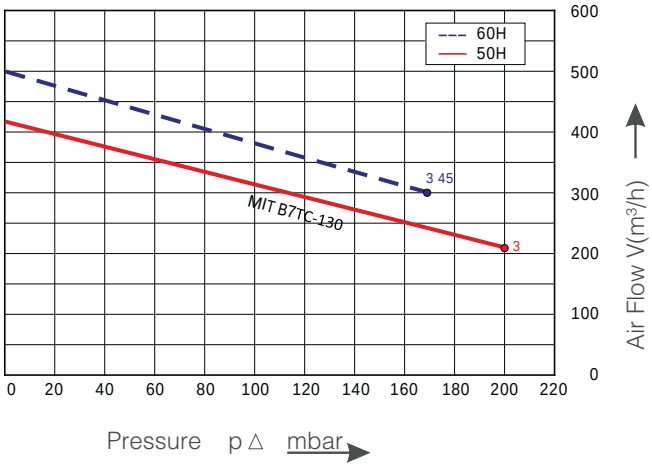

MIT Blower Technical Drawing

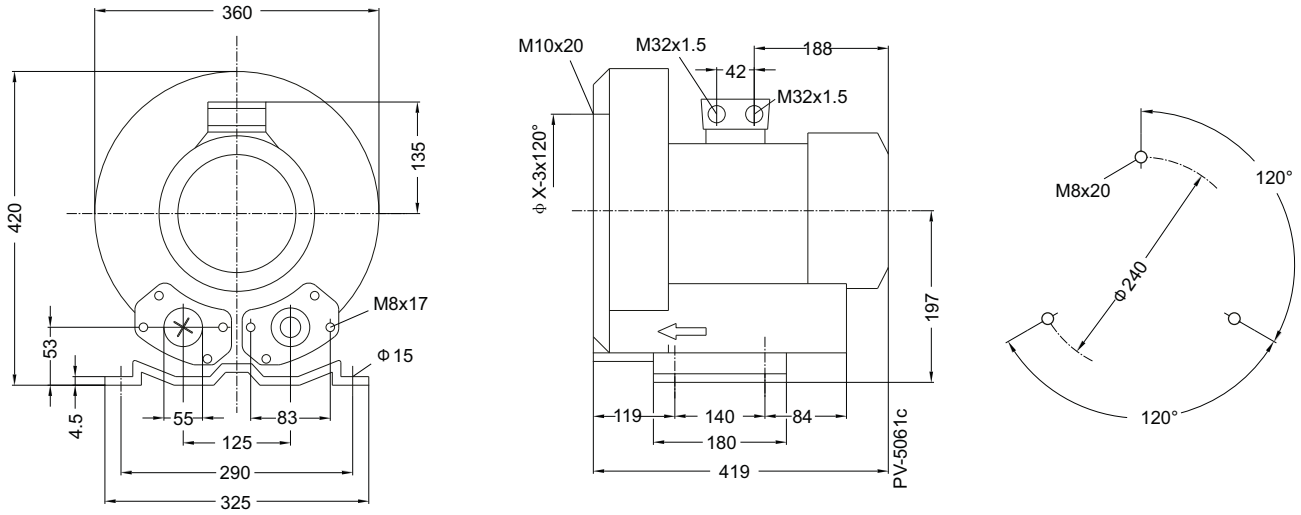

MIT BLOWER PARAMERTER									
Model	Frequency Hz	Power kW	Voltage V	Current A	Air Flow m³/h	Pressure		Noice dB (A)	Weight kg
						Vacuum mbar	Head mbar		
1~ 50/60Hz IP54 Protection Class F									
MIT B7TC-130	50	3,0	200-240Δ 345-415Y	12.5 Δ7.2Y	420	-220	200	70	37
MIT B7TC-130	60	3,45	220-275Δ 380-480Y	12.5 Δ7.3Y	500	-200	170	73	37

MIT Blowers have been tested under the following condition:
Performance tables were created by testing it with the aspiration of air at a temperature of 15 °C under 1 atm pressure.
If the temperature around the aspirated air and the blower is not more than 25 °C, the total pressure differences are as shown in the performance tables.
A deviation of +- 10% in values may occur.

MIT B7TC-140 Series Technical Data Sheet

MIT Blower Performance Curves

Vacuum Selection Curve

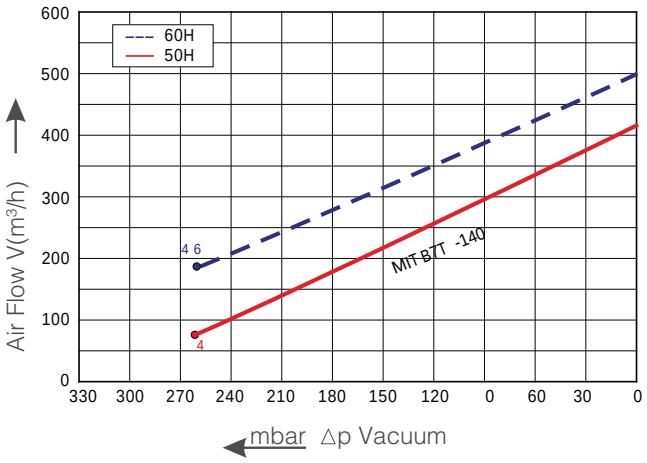

Compressor Selection Curves

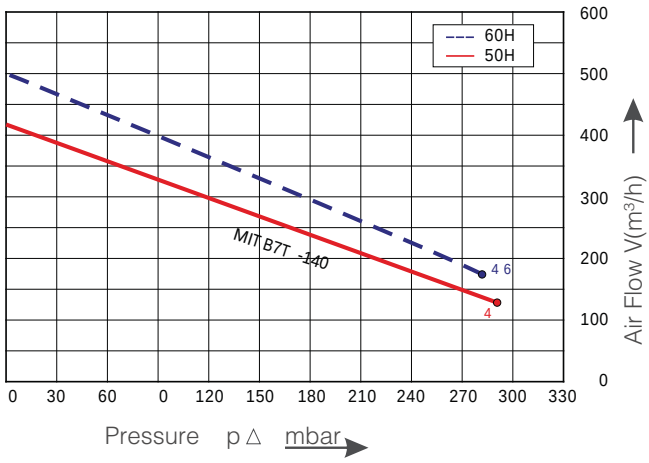

MIT Blower Technical Drawing

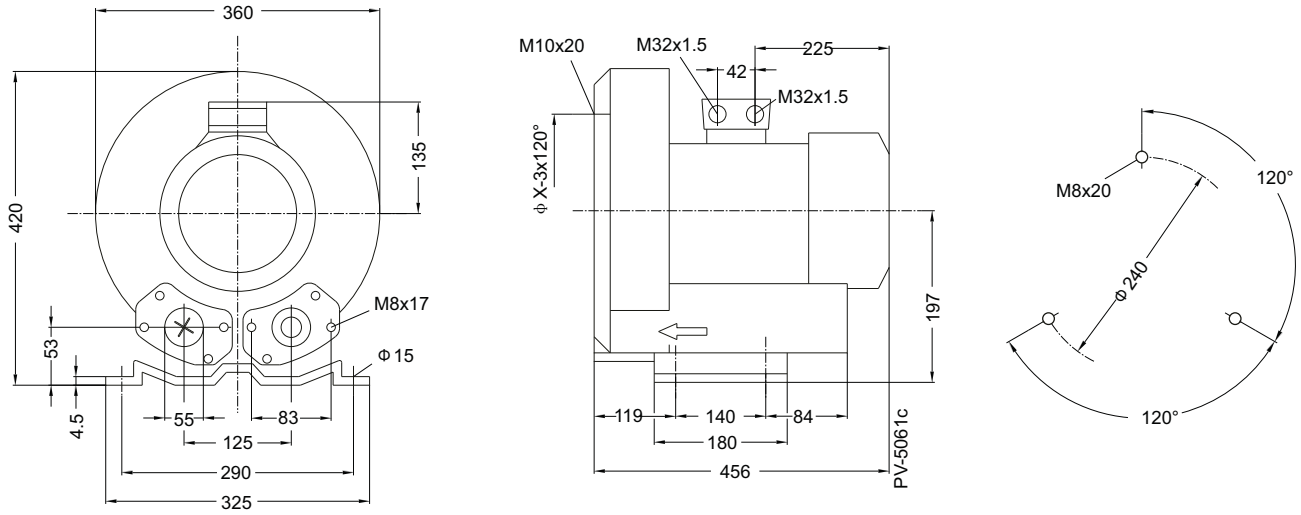

MIT BLOWER PARAMERTER									
Model	Frequency Hz	Power kW	Voltage V	Current A	Air Flow m³/h	Pressure		Noice dB (A)	Weight kg
						Vacuum mbar	Head mbar		
1~ 50/60Hz IP54 Protection Class F									
MIT B7TC-140	50	4,0	345-415 Δ 600-690Y	9.5 Δ 5.5Y	420	-260	290	70	43
MIT B7TC-140	60	4,45	380-480 Δ 660-720Y	9.5 Δ 5.5Y	500	-260	280	73	43

MIT Blowers have been tested under the following condition:
Performance tables were created by testing it with the aspiration of air at a temperature of 15 °C under 1 atm pressure.
If the temperature around the aspirated air and the blower is not more than 25 °C, the total pressure differences are as shown in the performance tables.
A deviation of +- 10% in values may occur.

MIT B7TT-122 Series Technical Data Sheet

MIT Blower Performance Curves

Vacuum Selection Curve

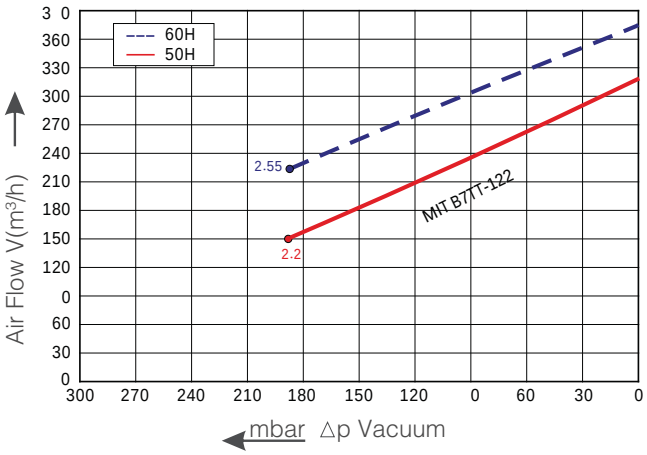

Compressor Selection Curves

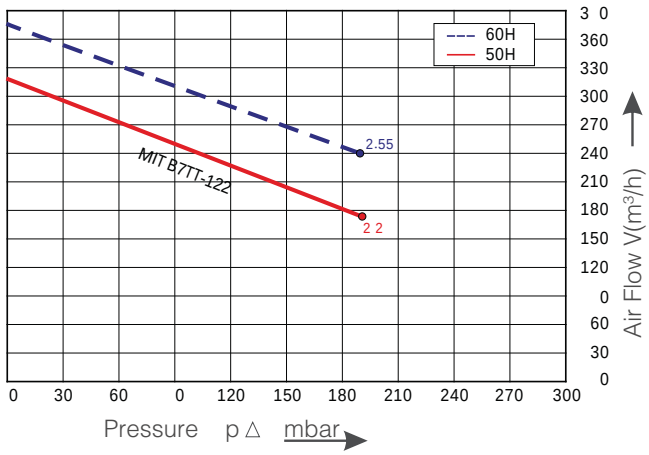

MIT Blower Technical Drawing

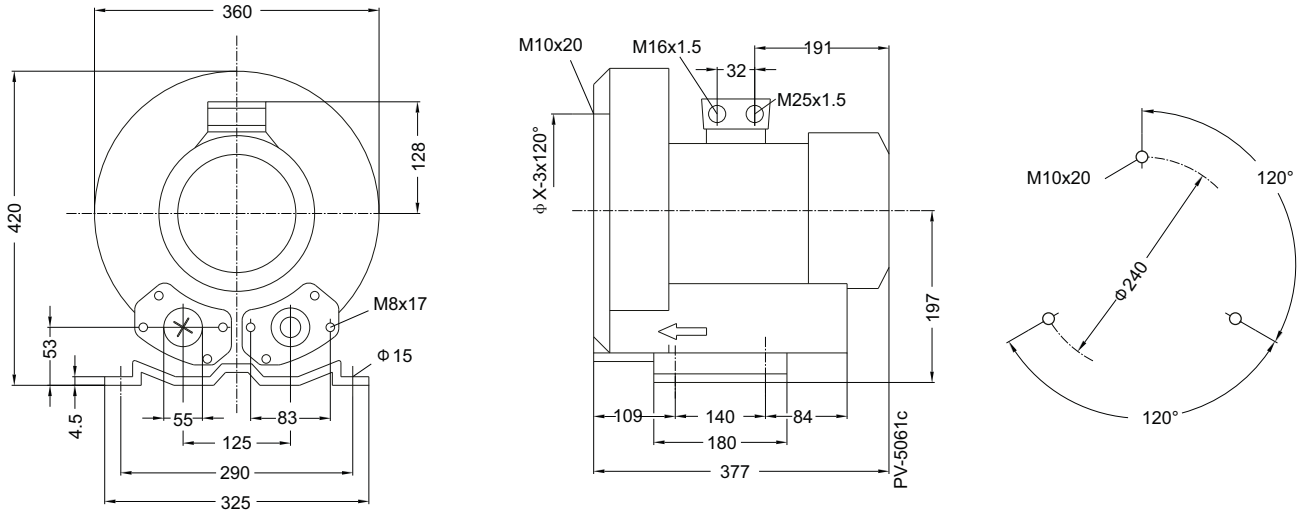

MIT BLOWER PARAMERTER									
Model	Frequency Hz	Power kW	Voltage V	Current A	Air Flow m³/h	Pressure		Noice dB (A)	Weight kg
						Vacuum mbar	Head mbar		
1~ 50/60Hz IP54 Protection Class F									
MIT B7TT-122	50	2,2	200-240Δ345-415Y	9.7Δ56Y	318	-190	190	69	29
MIT B7TT-122	60	2,5	220-275Δ380-480Y	10 Δ5.8Y	376	-190	190	72	29

MIT Blowers have been tested under the following condition:
Performance tables were created by testing it with the aspiration of air at a temperature of 15 °C under 1 atm pressure.
If the temperature around the aspirated air and the blower is not more than 25 °C, the total pressure differences are as shown in the performance tables.
A deviation of +- 10% in values may occur.

MIT B7TT-130 Series Technical Data Sheet

MIT Blower Performance Curves

Vacuum Selection Curve

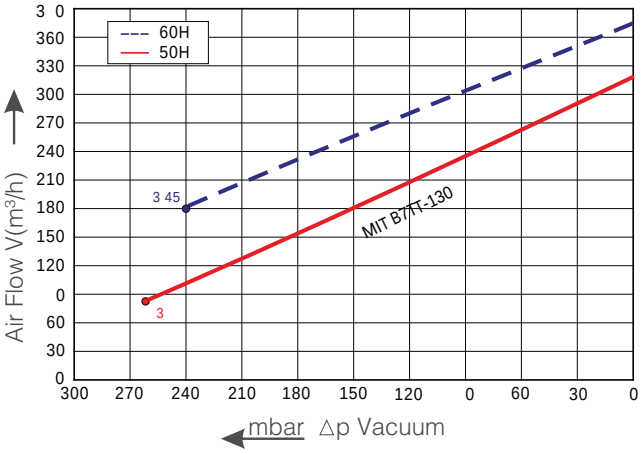

Compressor Selection Curves

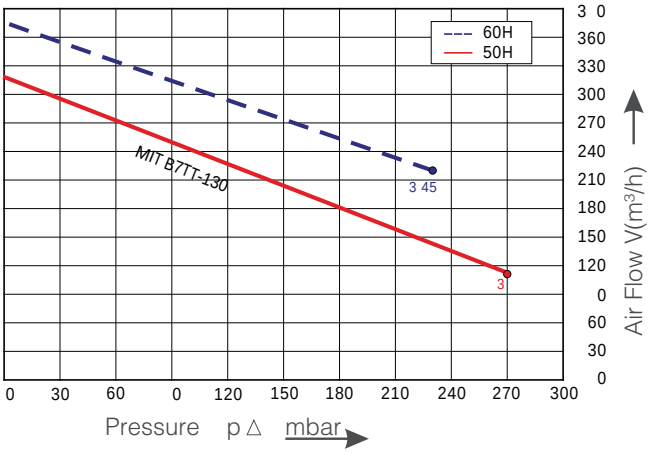

MIT Blower Technical Drawing

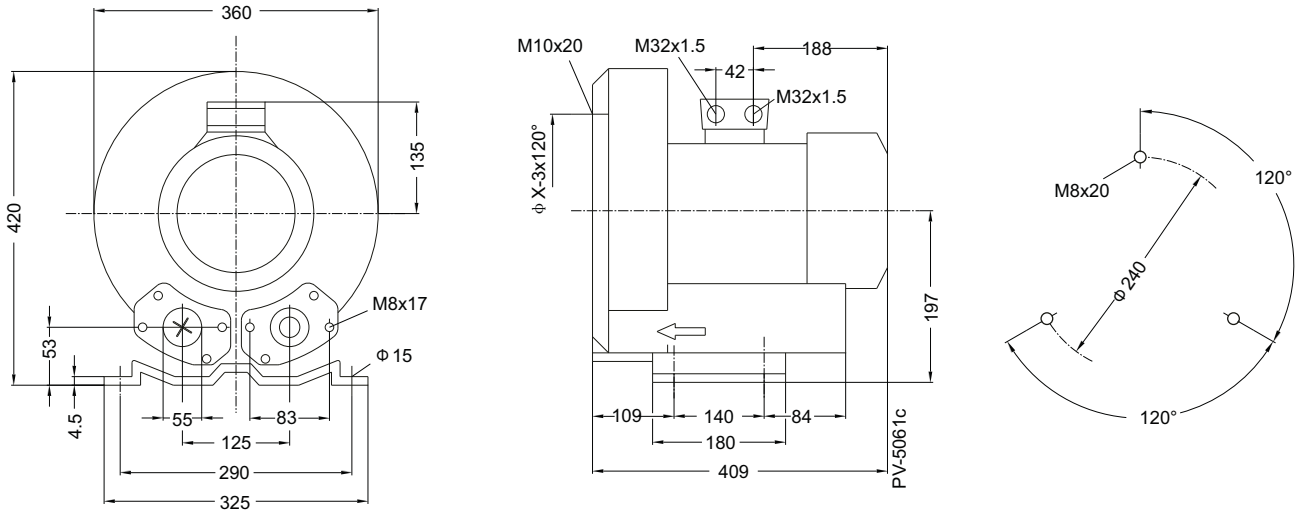

MIT BLOWER PARAMERTER									
Model	Frequency Hz	Power kW	Voltage V	Current A	Air Flow m³/h	Pressure		Noice dB (A)	Weight kg
						Vacuum mbar	Head mbar		
1~ 50/60Hz IP54 Protection Class F									
MIT B7TT-130	50	3	200-240△345-415Y	12.5△ 7.2Y	318	-260	270	69	34
MIT B7TT-130	60	3,45	220-275△380-480Y	12.5△ 7.3Y	376	-240	230	72	34

MIT Blowers have been tested under the following condition:
Performance tables were created by testing it with the aspiration of air at a temperature of 15 °C under 1 atm pressure.
If the temperature around the aspirated air and the blower is not more than 25 °C, the total pressure differences are as shown in the performance tables.
A deviation of +- 10% in values may occur.

MIT B7TT-140 Series Technical Data Sheet

MIT Blower Performance Curves

Vacuum Selection Curve

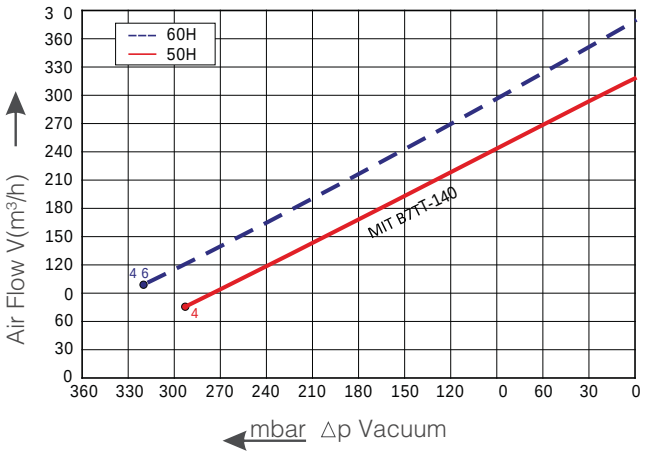

Compressor Selection Curves

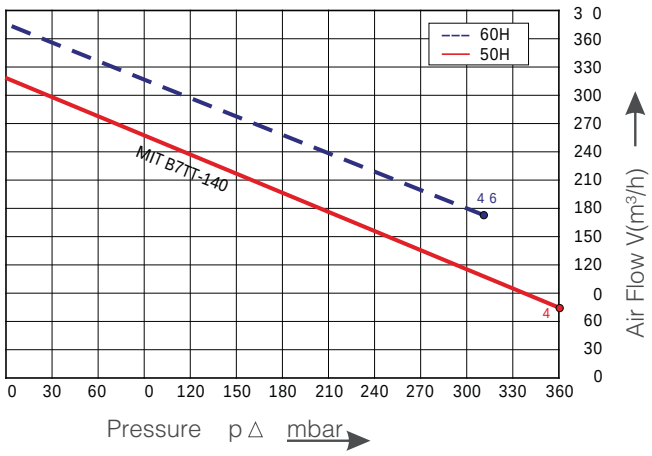

MIT Blower Technical Drawing

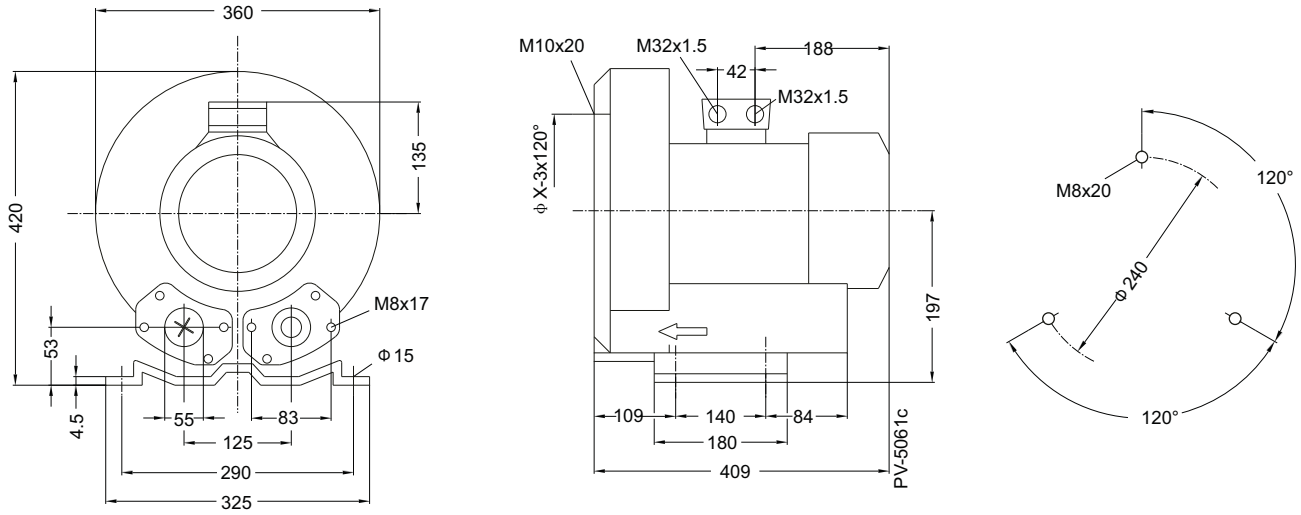

MIT BLOWER PARAMERTER									
Model	Frequency Hz	Power kW	Voltage V	Current A	Air Flow m³/h	Pressure		Noice dB (A)	Weight kg
						Vacuum mbar	Head mbar		
1~ 50/60Hz IP54 Protection Class F									
MIT B7TT-140	50	4	200-240Δ345-415Y	9.5 Δ5.5Y	318	-290	330	69	42
MIT B7TT-140	60	4,6	220-275Δ380-480Y	9.5 Δ5.5Y	376	-320	310	72	42

MIT Blowers have been tested under the following condition:
Performance tables were created by testing it with the aspiration of air at a temperature of 15 °C under 1 atm pressure.
If the temperature around the aspirated air and the blower is not more than 25 °C, the total pressure differences are as shown in the performance tables.
A deviation of +- 10% in values may occur.

MIT B7TT-155 Series Technical Data Sheet

MIT Blower Performance Curves

Vacuum Selection Curve

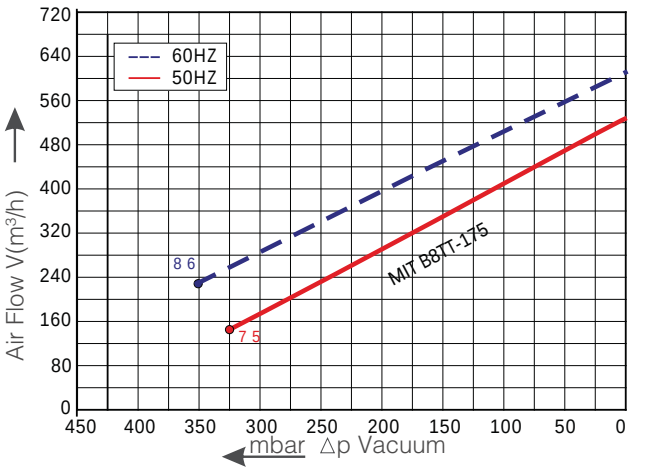

Compressor Selection Curves

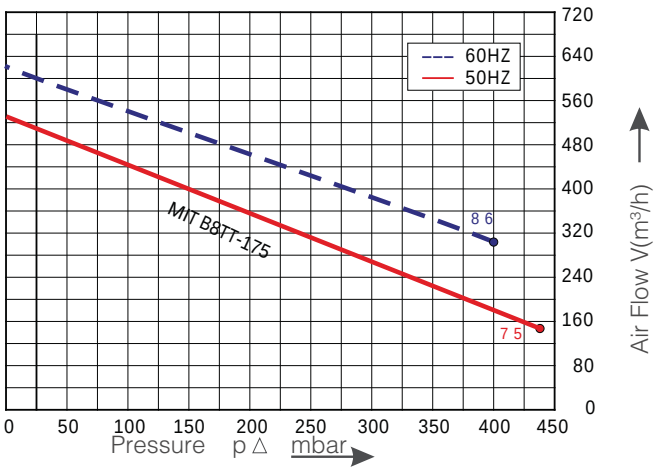

MIT Blower Technical Drawing

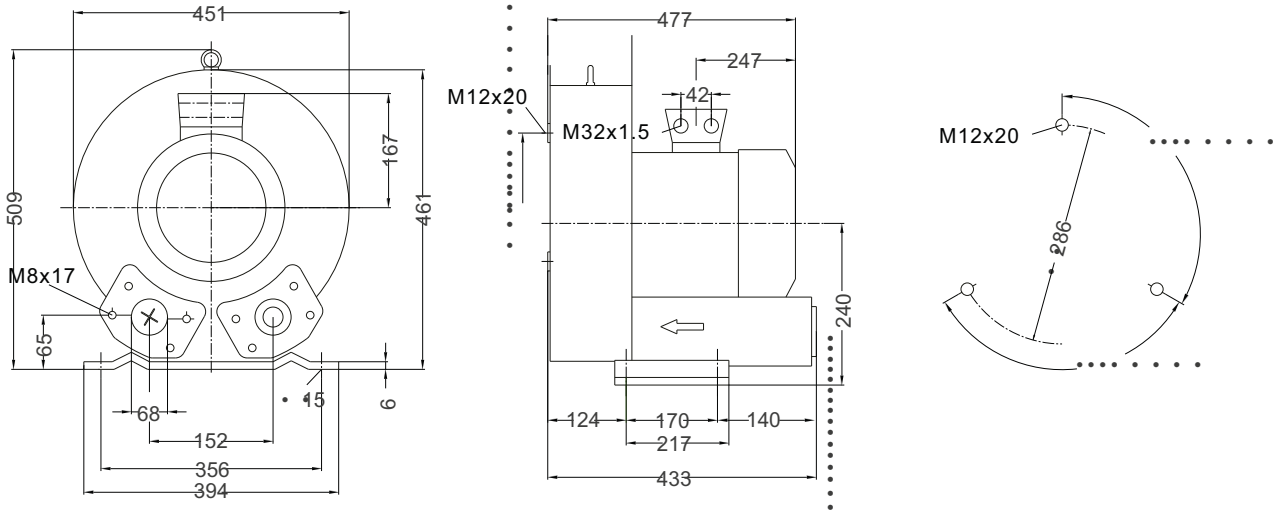

MIT BLOWER PARAMERTER									
Model	Frequency Hz	Power kW	Voltage V	Current A	Air Flow m³/h	Pressure		Noice dB (A)	Weight kg
						Vacuum mbar	Head mbar		
1~ 50/60Hz IP54 Protection Class F									
MIT B7TT-155	50	5.5	345-415 △600-720Y	13.3 △ 7.7Y	500	-240	260	74	69
MIT B7TT-155	60	6.3	380-485 △660-720Y	13.3 △ 7.7Y	600	-210	200	78	69

MIT Blowers have been tested under the following condition:
Performance tables were created by testing it with the aspiration of air at a temperature of 15 °C under 1 atm pressure.
If the temperature around the aspirated air and the blower is not more than 25 °C, the total pressure differences are as shown in the performance tables.
A deviation of +- 10% in values may occur.

MIT B8TC-175 Series Technical Data Sheet

MIT Blower Performance Curves

Vacuum Selection Curve

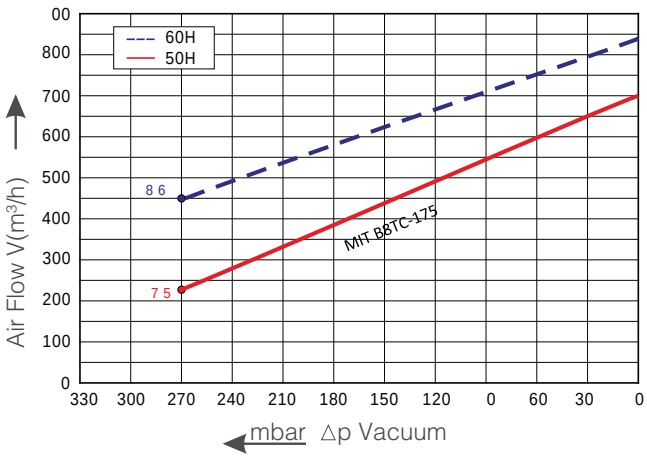

Compressor Selection Curves

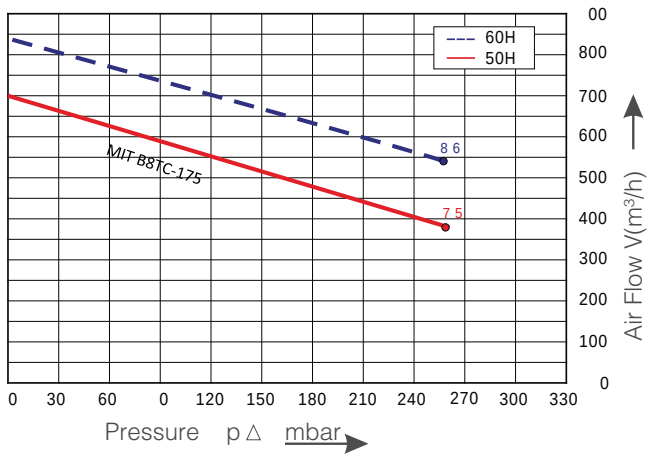

MIT Blower Technical Drawing

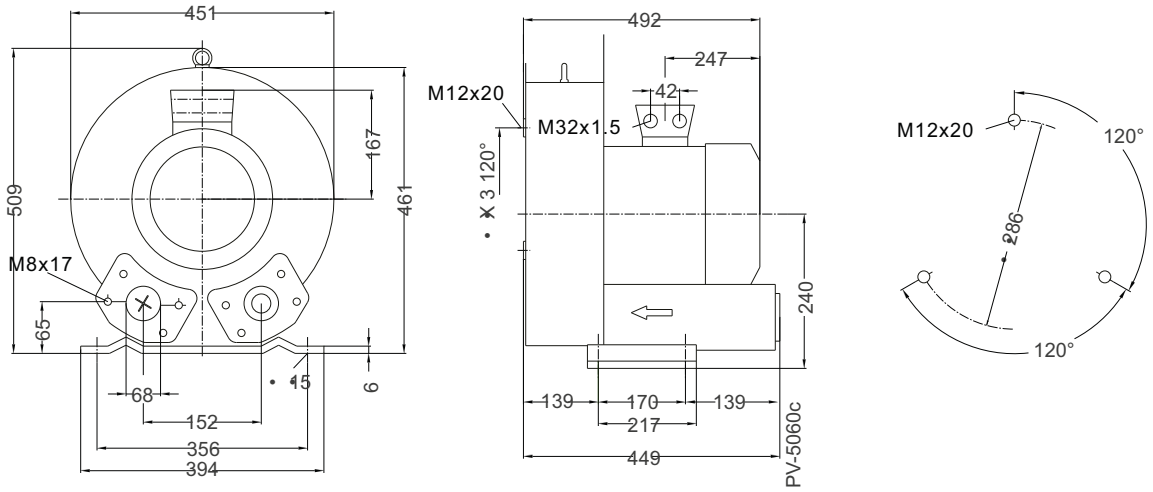

MIT BLOWER PARAMERTER									
Model	Frequency Hz	Power kW	Voltage V	Current A	Air Flow m³/h	Pressure		Noice dB (A)	Weight kg
						Vacuum mbar	Head mbar		
1~ 50/60Hz IP54 Protection Class F									
MIT B8TC-175	50	8.5	345-415 △600-720Y	16.7△ 9.6Y	700	-270	260	70	69
MIT B8TC-175	60	8.6	380-485 △660-720Y	17.3 △10.0Y	840	-270	260	74	69

MIT Blowers have been tested under the following condition:
Performance tables were created by testing it with the aspiration of air at a temperature of 15 °C under 1 atm pressure.
If the temperature around the aspirated air and the blower is not more than 25 °C, the total pressure differences are as shown in the performance tables.
A deviation of +- 10% in values may occur.

MIT B8TT-155 Series Technical Data Sheet

MIT Blower Performance Curves

Vacuum Selection Curve

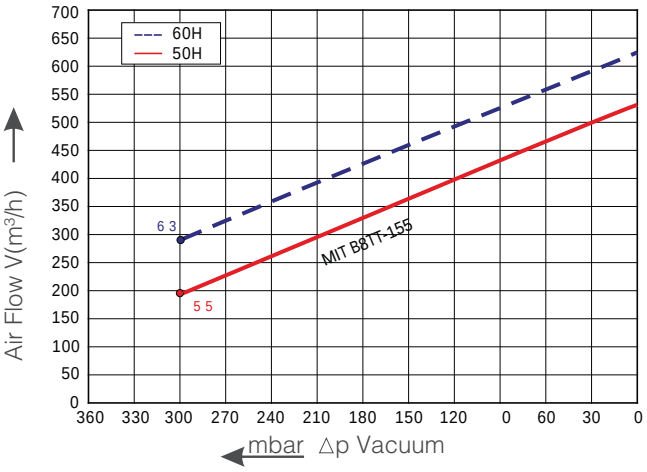

Compressor Selection Curves

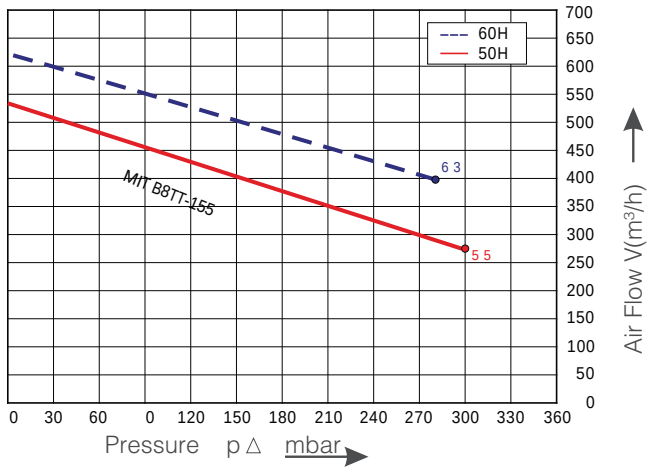

MIT Blower Technical Drawing

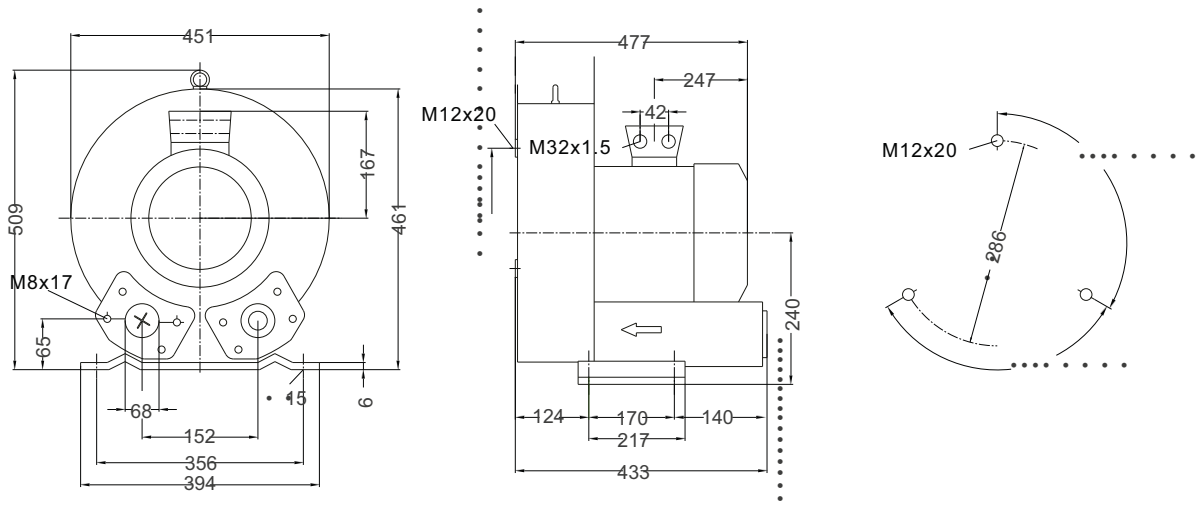

MIT BLOWER PARAMERTER									
Model	Frequency Hz	Power kW	Voltage V	Current A	Air Flow m³/h	Pressure		Noice dB (A)	Weight kg
						Vacuum mbar	Head mbar		
1~ 50/60Hz IP54 Protection Class F									
MIT B8TT-155	50	5.5	345-415 △600-720Y	13.3 △ 7.7Y	530	-300	300	70	63
MIT B8TT-155	60	6.3	380-485 △660-720Y	13.3 △ 7.7Y	620	-300	280	74	63

MIT Blowers have been tested under the following condition:
Performance tables were created by testing it with the aspiration of air at a temperature of 15 °C under 1 atm pressure.
If the temperature around the aspirated air and the blower is not more than 25 °C, the total pressure differences are as shown in the performance tables.
A deviation of +- 10% in values may occur.

MIT B8TT-175 Series Technical Data Sheet

MIT Blower Performance Curves

Vacuum Selection Curve

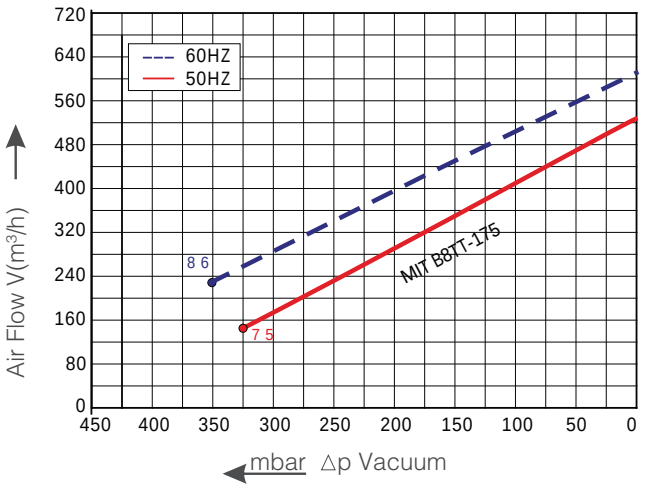

Compressor Selection Curves

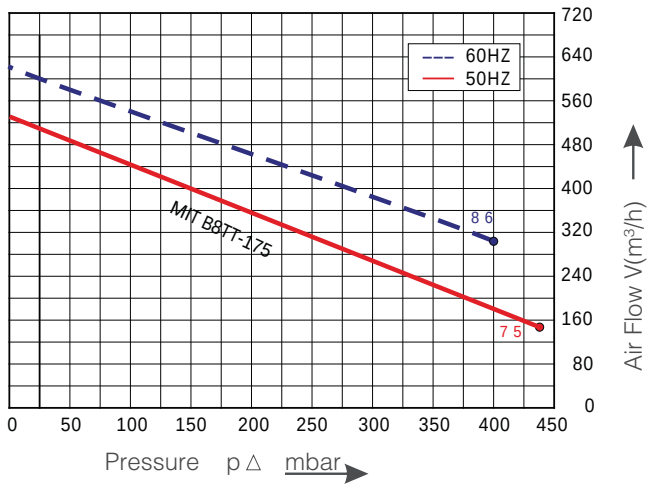

MIT Blower Technical Drawing

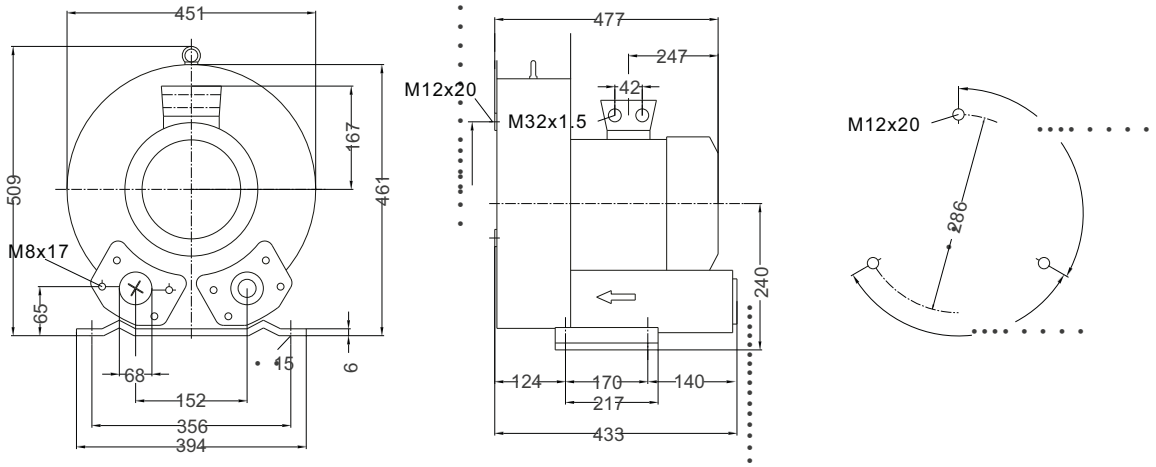

MIT BLOWER PARAMERTER									
Model	Frequency Hz	Power kW	Voltage V	Current A	Air Flow m³/h	Pressure		Noice dB (A)	Weight kg
						Vacuum mbar	Head mbar		
1~ 50/60Hz IP54 Protection Class F									
MIT B8TT-175	50	7.5	345-415 Δ 600-720Y	16.7 Δ 9.6Y	530	-320	380	80	68
MIT B8TT-175	60	8.6	380-485 Δ 660-720Y	17.3 Δ 10.0Y	620	-340	400	82	68

MIT Blowers have been tested under the following condition:
Performance tables were created by testing it with the aspiration of air at a temperature of 15 °C under 1 atm pressure.
If the temperature around the aspirated air and the blower is not more than 25 °C, the total pressure differences are as shown in the performance tables.
A deviation of +- 10% in values may occur.

MIT B9TT-185 Series Technical Data Sheet

MIT Blower Performance Curves

Vacuum Selection Curve

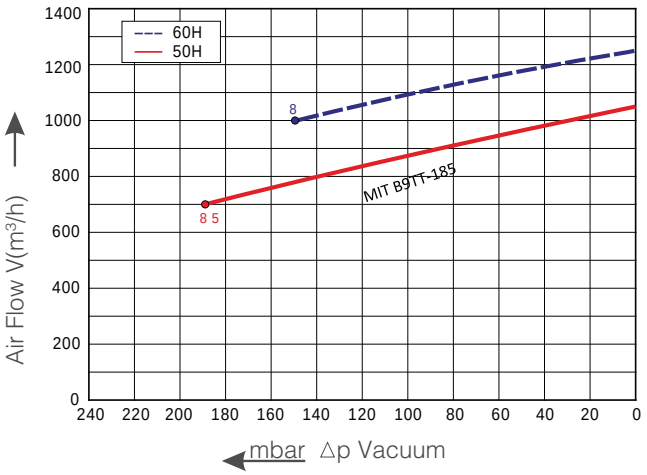

Compressor Selection Curves

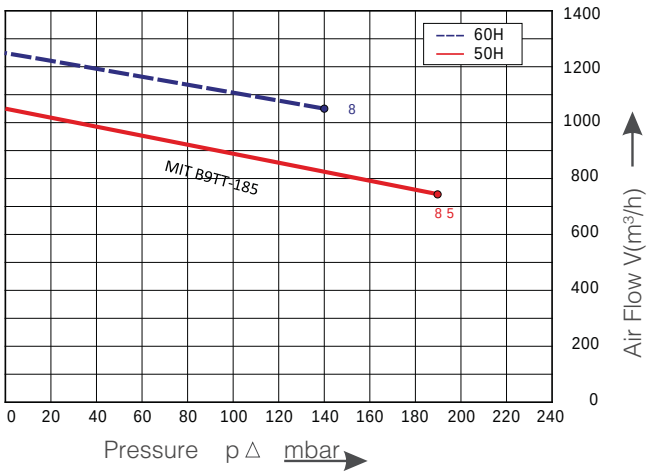

MIT Blower Technical Drawing

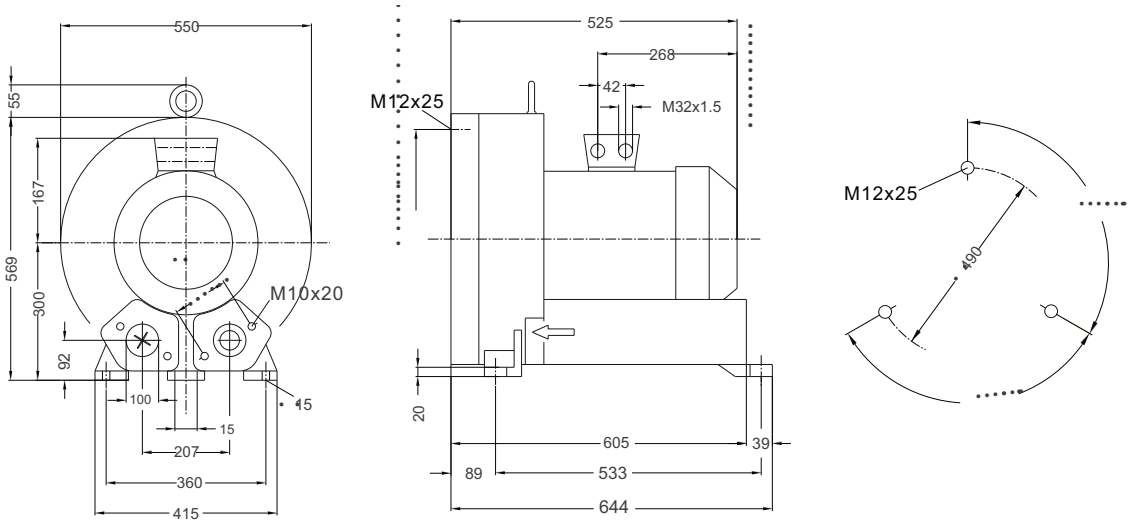

MIT BLOWER PARAMERTER									
Model	Frequency Hz	Power kW	Voltage V	Current A	Air Flow m³/h	Pressure		Noice dB (A)	Weight kg
						Vacuum mbar	Head mbar		
1~ 50/60Hz IP54 Protection Class F									
MIT B9TT-185	50	8.5	345-415△600-720Y	18.2△10.5Y	1050	-190	190	74	93
MIT B9TT-185	60	9.8	380-485△660-720Y	18.2△10.5Y	1250	-150	140	79	93

MIT Blowers have been tested under the following condition:
Performance tables were created by testing it with the aspiration of air at a temperature of 15 °C under 1 atm pressure.
If the temperature around the aspirated air and the blower is not more than 25 °C, the total pressure differences are as shown in the performance tables.
A deviation of +- 10% in values may occur.

MIT B9TT-1250 Series Technical Data Sheet

MIT Blower Performance Curves

Vacuum Selection Curve

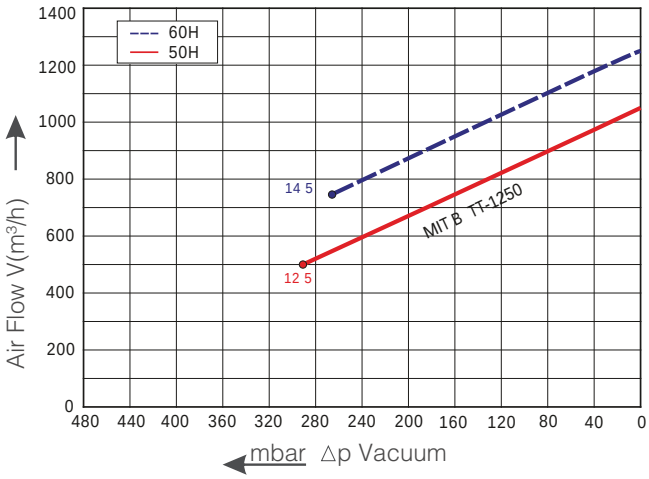

Compressor Selection Curves

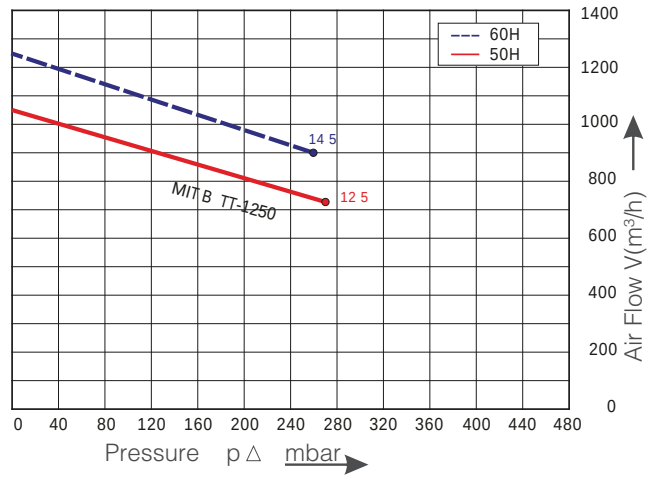

MIT Blower Technical Drawing

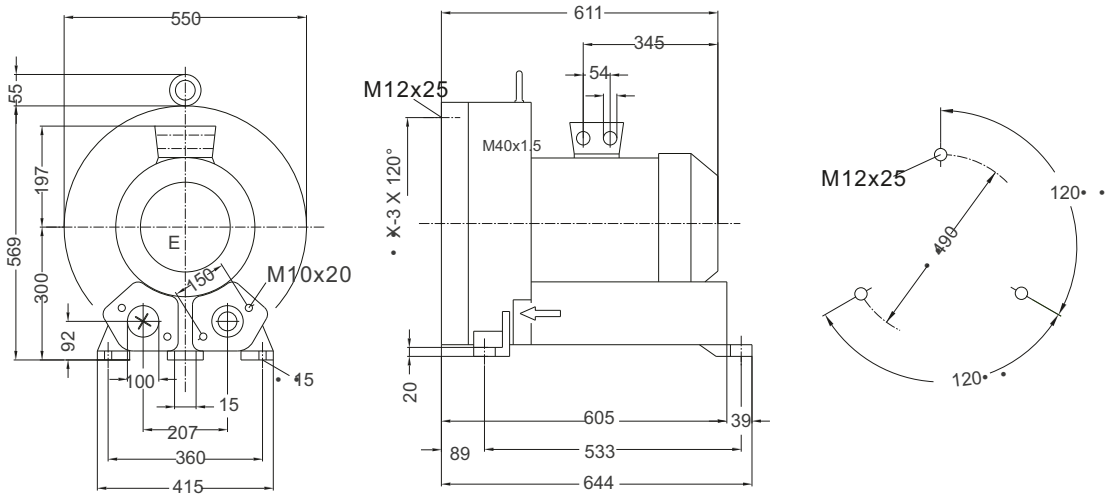

MIT BLOWER PARAMERTER									
Model	Frequency Hz	Power kW	Voltage V	Current A	Air Flow m³/h	Pressure		Noice dB (A)	Weight kg
						Vacuum mbar	Head mbar		
1~ 50/60Hz IP54 Protection Class F									
MIT B9TT-1250	50	12.5	345-415 Δ 600-720Y	28.0 Δ 16.2Y	1050	-290	280	74	116
MIT B9TT-1250	60	14.5	380-485 Δ 660-720Y	29.0 Δ 16.7Y	1250	-270	260	79	116

MIT Blowers have been tested under the following condition:
Performance tables were created by testing it with the aspiration of air at a temperature of 15 °C under 1 atm pressure.
If the temperature around the aspirated air and the blower is not more than 25 °C, the total pressure differences are as shown in the performance tables.
A deviation of +- 10% in values may occur.

MIT B9TT-1850 Series Technical Data Sheet

MIT Blower Performance Curves

Vacuum Selection Curve

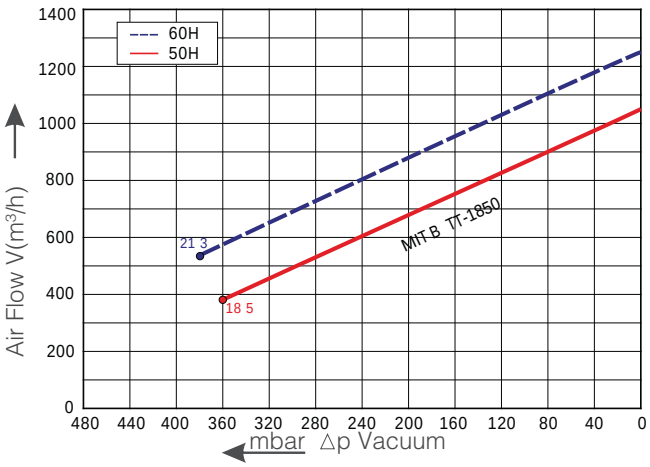

Compressor Selection Curves

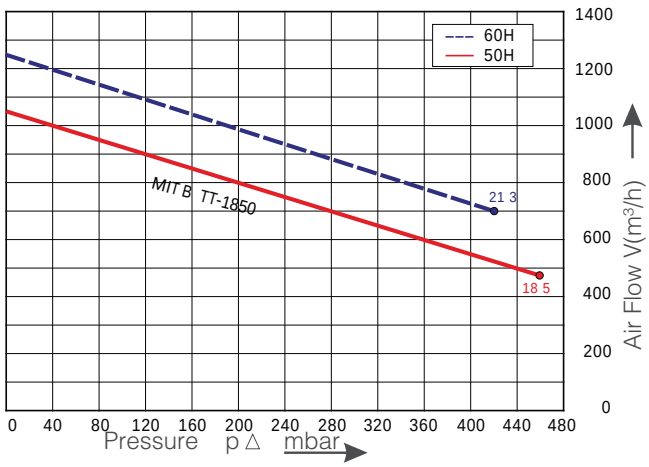

MIT Blower Technical Drawing

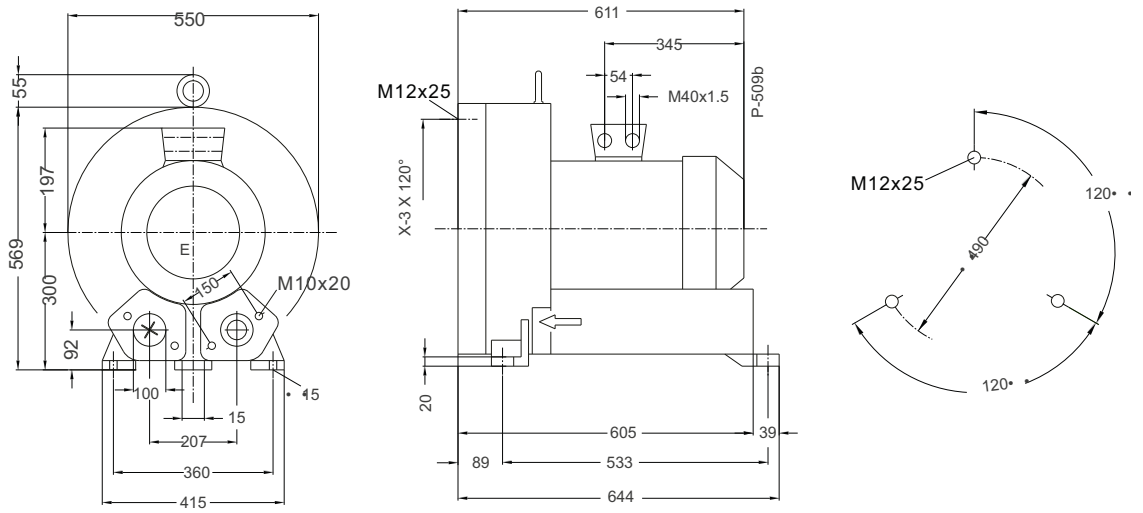

MIT BLOWER PARAMERTER									
Model	Frequency Hz	Power kW	Voltage V	Current A	Air Flow m³/h	Pressure		Noice dB (A)	Weight kg
						Vacuum mbar	Head mbar		
1~ 50/60Hz IP54 Protection Class F									
MIT B9TT-1850	50	18.5	345-415Δ 600-720Y	37.0 Δ 21.0Y	1050	-360	460	74	126
MIT B9TT-1850	60	21.3	380-485Δ 660-720Y	39.0 Δ 22.5Y	1250	-380	420	79	126

MIT Blowers have been tested under the following condition:
Performance tables were created by testing it with the aspiration of air at a temperature of 15 °C under 1 atm pressure.
If the temperature around the aspirated air and the blower is not more than 25 °C, the total pressure differences are as shown in the performance tables.
A deviation of +- 10% in values may occur.

MIT B1TT-M-102 Series Technical Data Sheet

MIT Blower Performance Curves

Vacuum Selection Curve

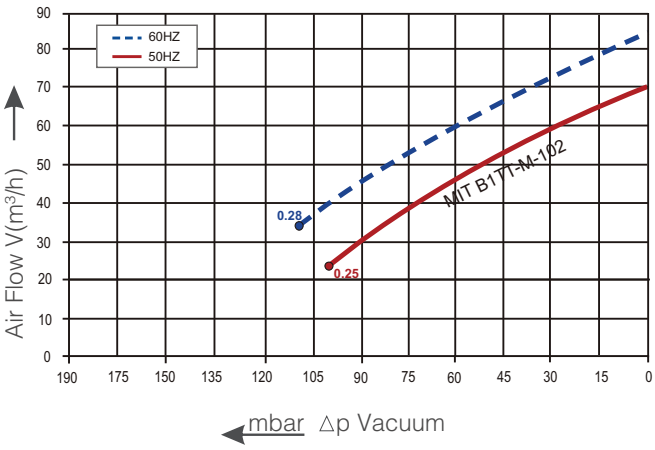

Compressor Selection Curves

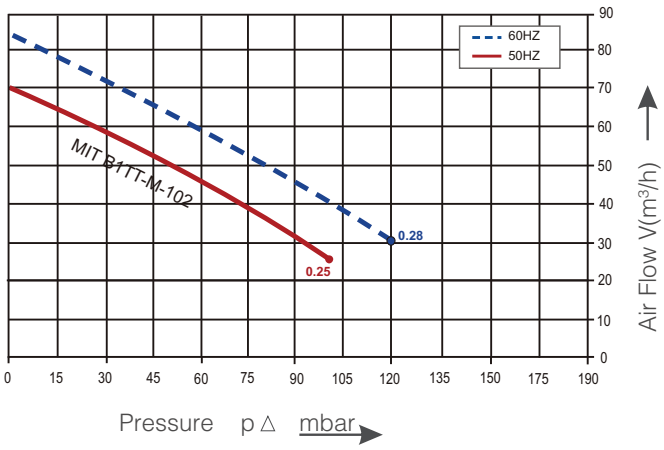

MIT Blower Technical Drawing

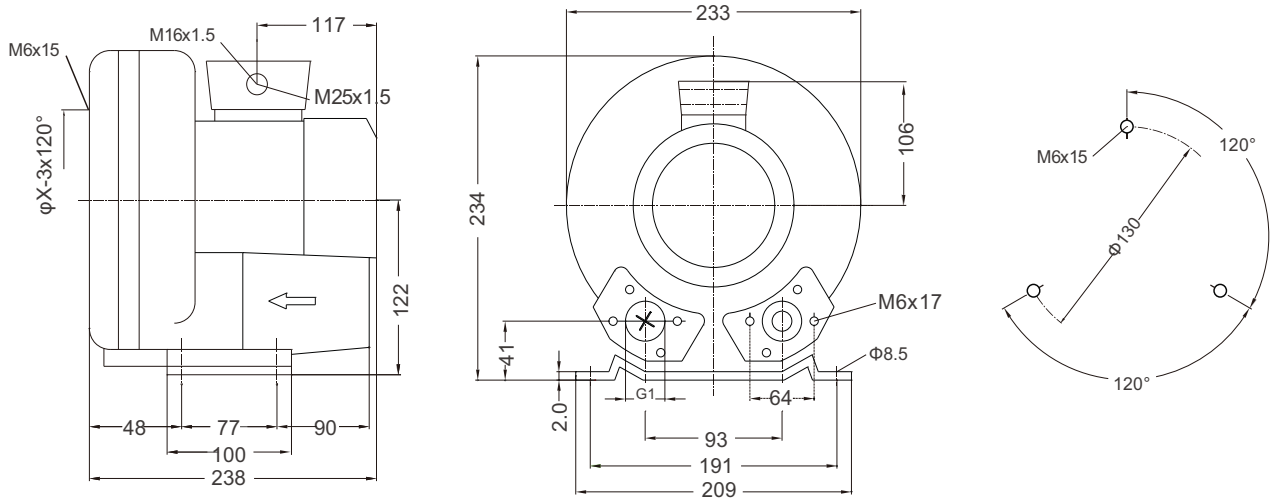

MIT BLOWER PARAMERTER									
Model	Frequency Hz	Power kW	Voltage V	Current A	Air Flow m³/h	Pressure		Noice dB (A)	Weight kg
						Vacuum mbar	Head mbar		
3~ 50/60Hz IP54 Protection Class F									
MIT B1TT-M-102	50	0.25	200-240	1.7	70	-100	100	48	8
MIT B1TT-M-102	60	0.28	220-275	1.9	85	-110	120	50	8

MIT Blowers have been tested under the following condition:
Performance tables were created by testing it with the aspiration of air at a temperature of 15 °C under 1 atm pressure.
If the temperature around the aspirated air and the blower is not more than 25 °C, the total pressure differences are as shown in the performance tables.
A deviation of +- 10% in values may occur.

MIT B2TT-M-104 Series Technical Data Sheet

MIT Blower Performance Curves

Vacuum Selection Curve

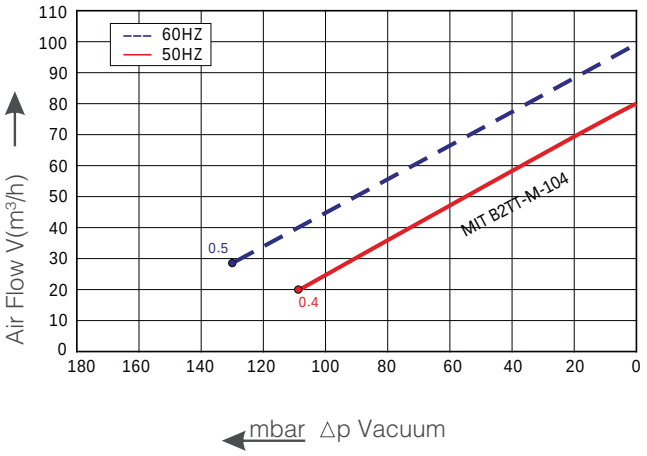

Compressor Selection Curves

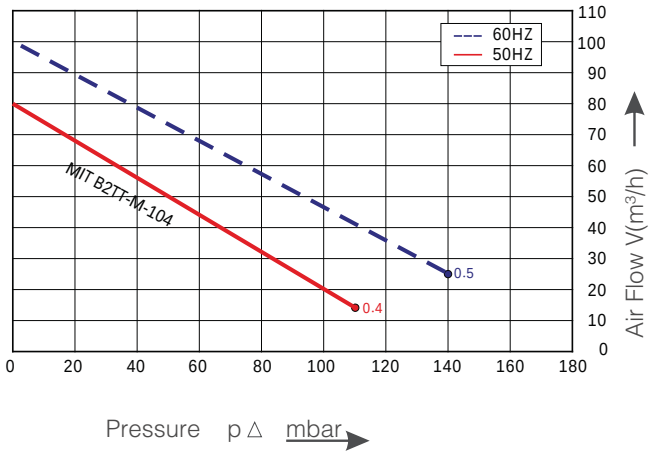

MIT Blower Technical Drawing

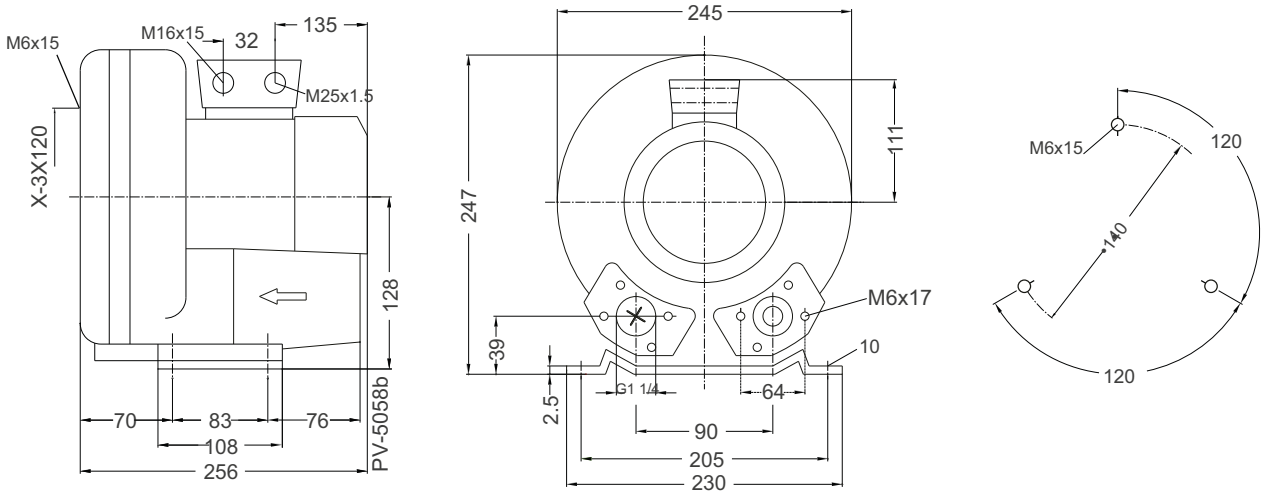

MIT BLOWER PARAMERTER									
Model	Frequency Hz	Power kW	Voltage V	Current A	Air Flow m³/h	Pressure		Noice dB (A)	Weight kg
						Vacuum mbar	Head mbar		
1~ 50/60Hz IP54 Protection Class F									
MIT B2TT-M-104	50	0.4	200-240	2.7	80	-110	110	53	11
MIT B2TT-M-104	60	0.5	220-275	3.2	98	-130	140	56	11

MIT Blowers have been tested under the following condition:
Performance tables were created by testing it with the aspiration of air at a temperature of 15 °C under 1 atm pressure.
If the temperature around the aspirated air and the blower is not more than 25 °C, the total pressure differences are as shown in the performance tables.
A deviation of +- 10% in values may occur.

MIT B3TT-M-105 Series Technical Data Sheet

MIT Blower Performance Curves

Vacuum Selection Curve

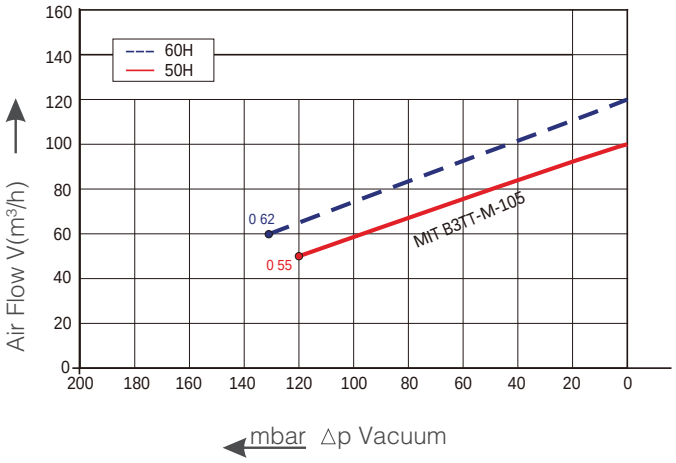

Compressor Selection Curves

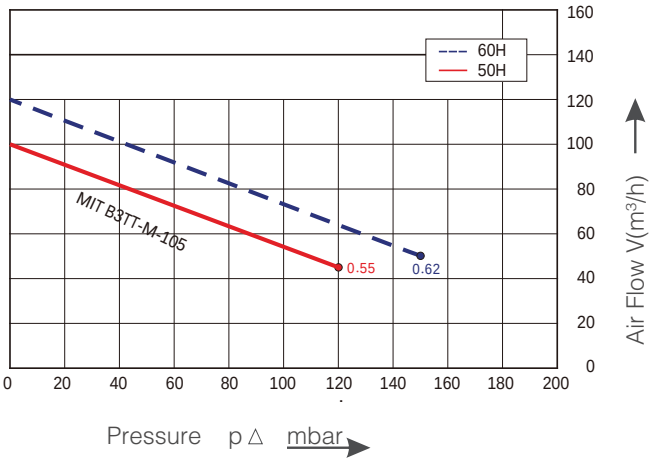

MIT Blower Technical Drawing

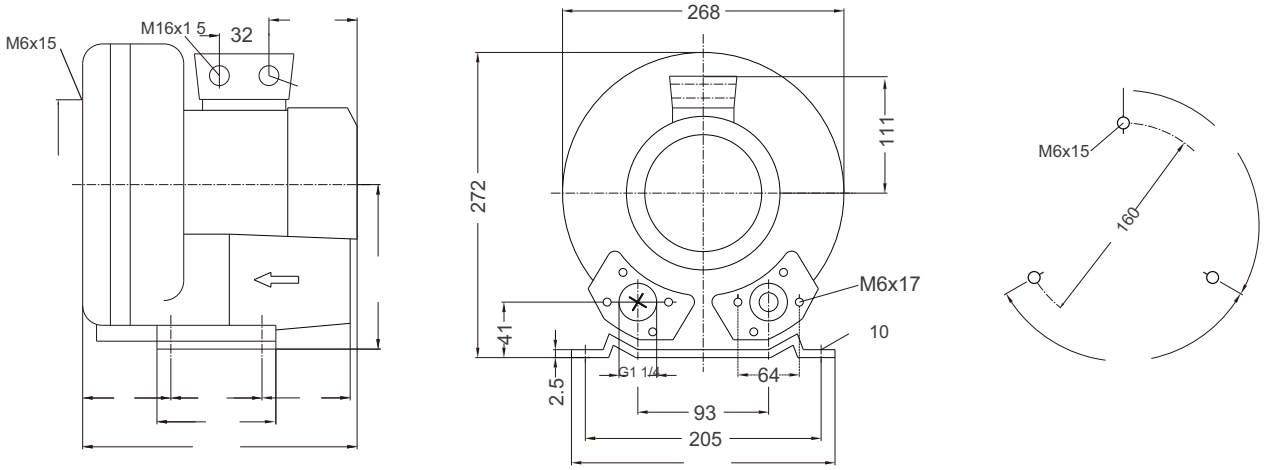

MIT BLOWER PARAMERTER									
Model	Frequency Hz	Power kW	Voltage V	Current A	Air Flow m³/h	Pressure		Noice dB (A)	Weight kg
						Vacuum mbar	Head mbar		
1~ 50/60Hz IP54 Protection Class F									
MIT B3TT-M-105	50	0.5	200-240	3.7	100	-120	120	57	13
MIT B3TT-M-105	60	0.62	220-275	4.5	120	-130	150	60	13

MIT Blowers have been tested under the following condition:
Performance tables were created by testing it with the aspiration of air at a temperature of 15 °C under 1 atm pressure.
If the temperature around the aspirated air and the blower is not more than 25 °C, the total pressure differences are as shown in the performance tables.
A deviation of +- 10% in values may occur.

MIT B3TT-M-107 Series Technical Data Sheet

MIT Blower Performance Curves

Vacuum Selection Curve

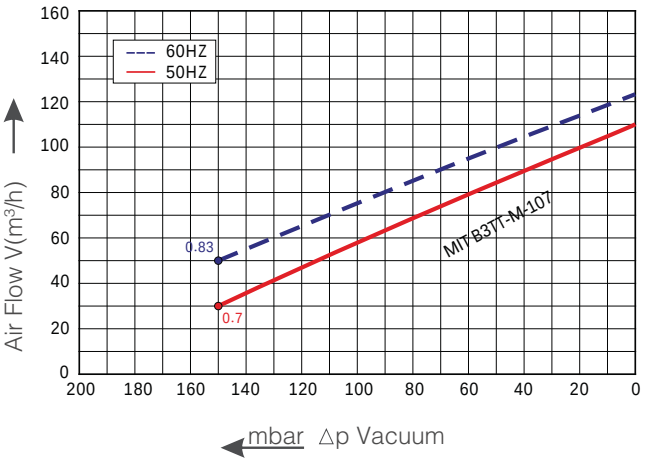

Compressor Selection Curves

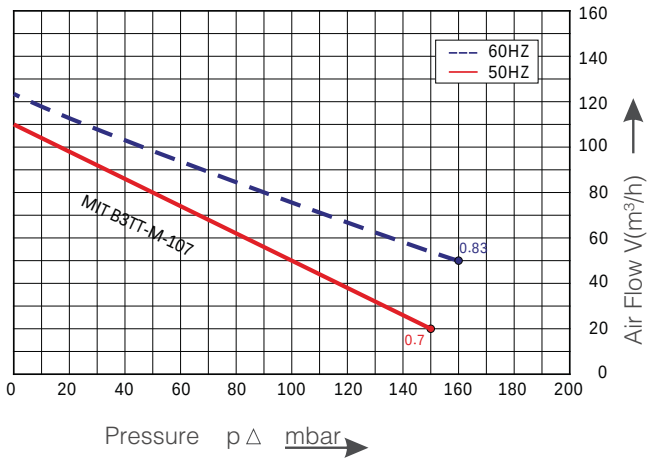

MIT Blower Technical Drawing

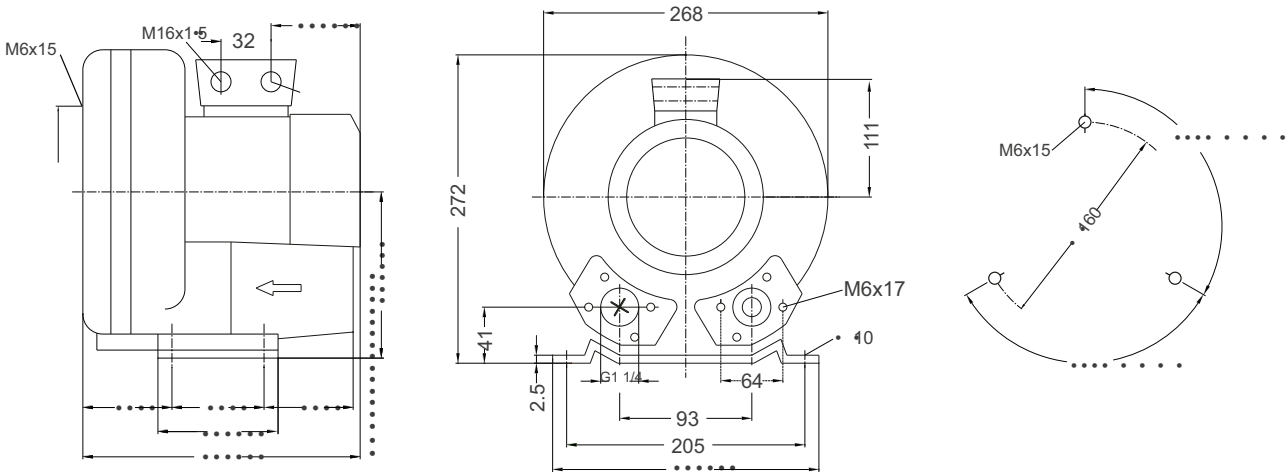

MIT BLOWER PARAMERTER									
Model	Frequency Hz	Power kW	Voltage V	Current A	Air Flow m³/h	Pressure		Noice dB (A)	Weight kg
						Vacuum mbar	Head mbar		
1~ 50/60Hz IP54 Protection Class F									
MIT B3TT-M-107	50	0.7	200-240	4.8	100	-150	150	55	14
MIT B3TT-M-107	60	0.83	220-275	4.1	120	-150	160	57	14

MIT Blowers have been tested under the following condition:
Performance tables were created by testing it with the aspiration of air at a temperature of 15 °C under 1 atm pressure.
If the temperature around the aspirated air and the blower is not more than 25 °C, the total pressure differences are as shown in the performance tables.
A deviation of +- 10% in values may occur.

MIT B4TT-M-107 Series Technical Data Sheet

MIT Blower Performance Curves

Vacuum Selection Curve

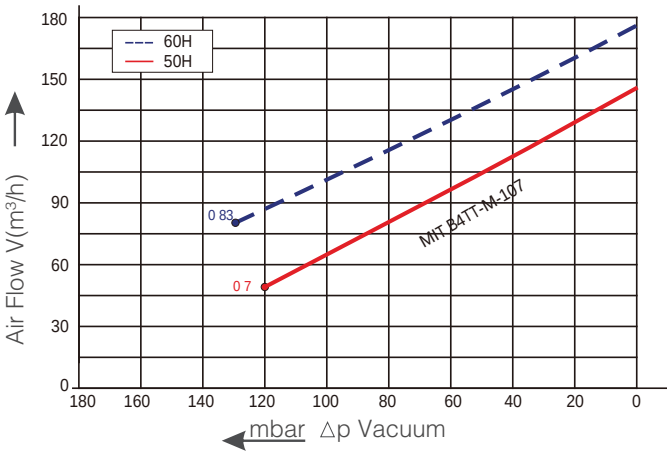

Compressor Selection Curves

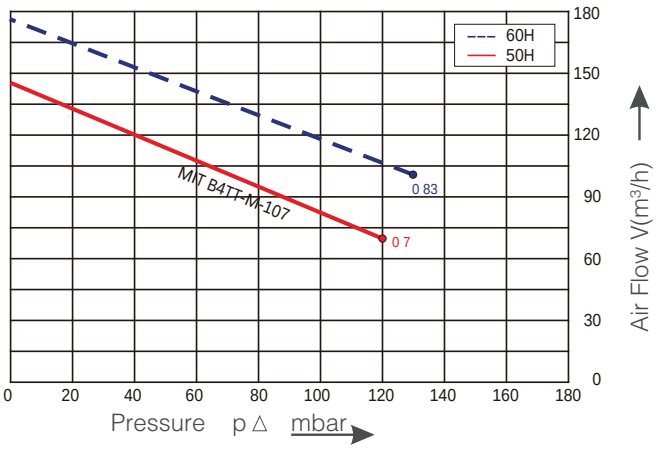

MIT Blower Technical Drawing

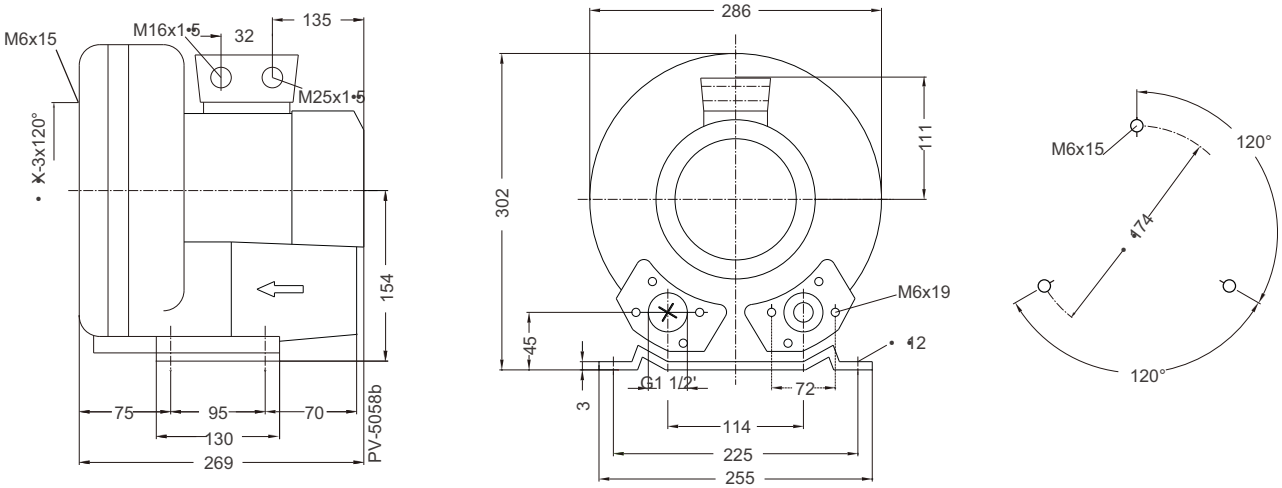

MIT BLOWER PARAMERTER									
Model	Frequency Hz	Power kW	Voltage V	Current A	Air Flow m³/h	Pressure		Noice dB (A)	Weight kg
						Vacuum mbar	Head mbar		
1~ 50/60Hz IP54 Protection Class F									
MIT B4TT-M-107	50	0.7	200-240	4.5	145	-120	120	63	14
MIT B4TT-M-107	60	0.83	220-275	5.6	150	-130	130	64	14

MIT Blowers have been tested under the following condition:
Performance tables were created by testing it with the aspiration of air at a temperature of 15 °C under 1 atm pressure.
If the temperature around the aspirated air and the blower is not more than 25 °C, the total pressure differences are as shown in the performance tables.
A deviation of +- 10% in values may occur.

MIT B4TT-M-108 Series Technical Data Sheet

MIT Blower Performance Curves

Vacuum Selection Curve

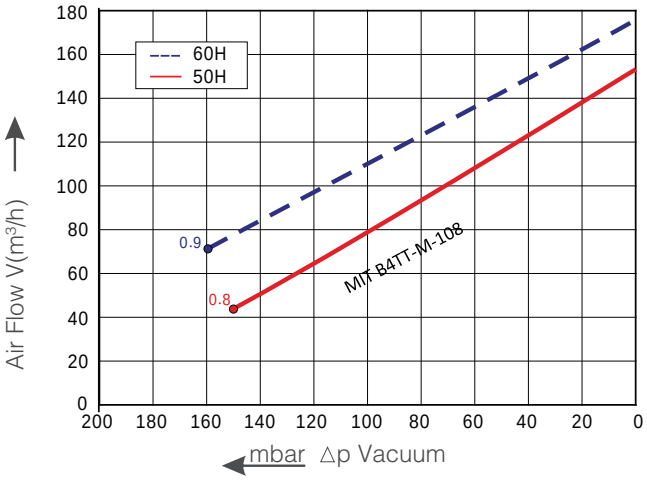

Compressor Selection Curves

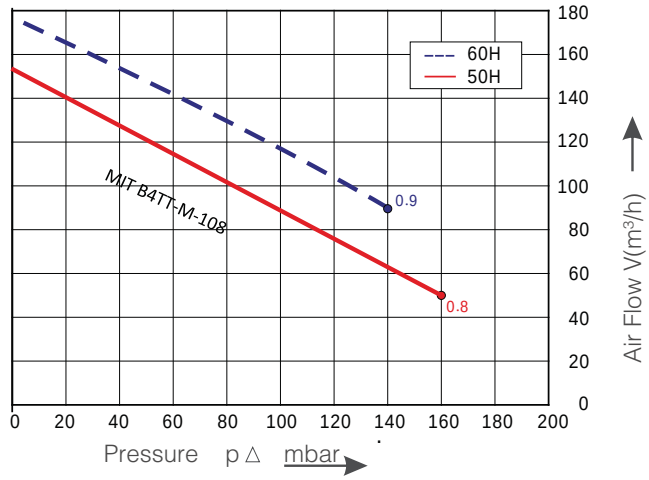

MIT Blower Technical Drawing

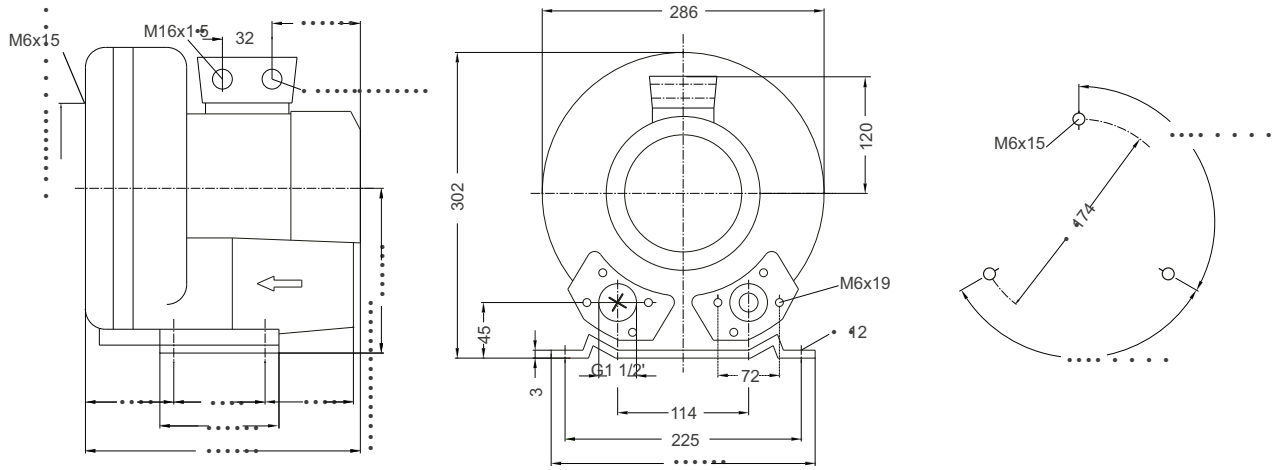

MIT BLOWER PARAMERTER									
Model	Frequency Hz	Power kW	Voltage V	Current A	Air Flow m³/h	Pressure		Noice dB (A)	Weight kg
						Vacuum mbar	Head mbar		
1~ 50/60Hz IP54 Protection Class F									
MIT B4TT-M-108	50	0.8	200-240	5.2	145	-150	160	63	15
MIT B4TT-M-108	60	0.9	220-275	5.8	175	-160	140	64	15

MIT Blowers have been tested under the following condition:
Performance tables were created by testing it with the aspiration of air at a temperature of 15 °C under 1 atm pressure.
If the temperature around the aspirated air and the blower is not more than 25 °C, the total pressure differences are as shown in the performance tables.
A deviation of +- 10% in values may occur.

MIT B4TT-M-113 Series Technical Data Sheet

MIT Blower Performance Curves

Vacuum Selection Curve

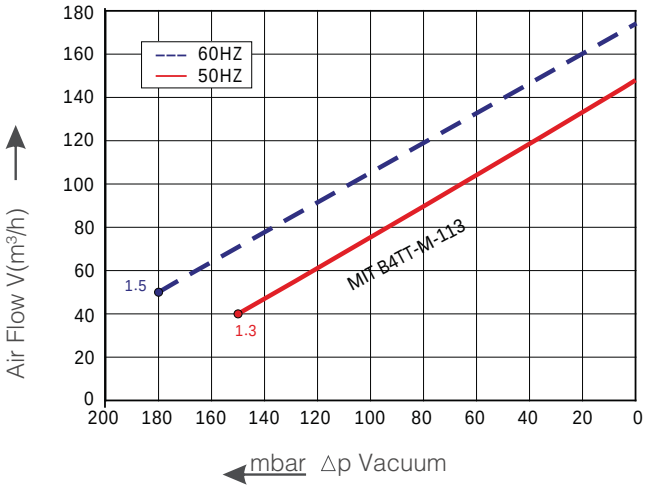

Compressor Selection Curves

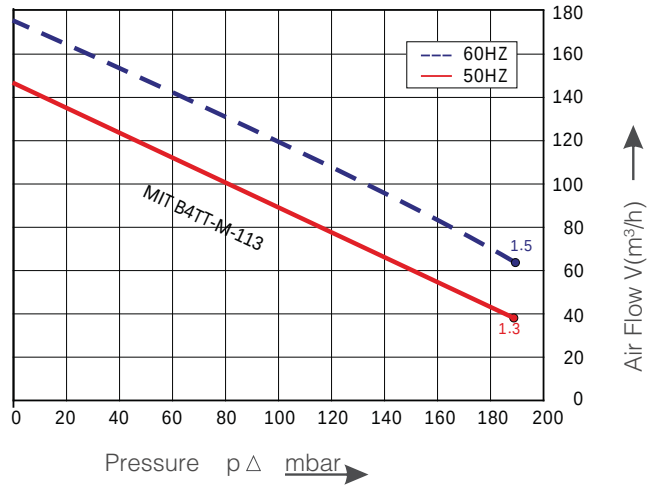

MIT Blower Technical Drawing

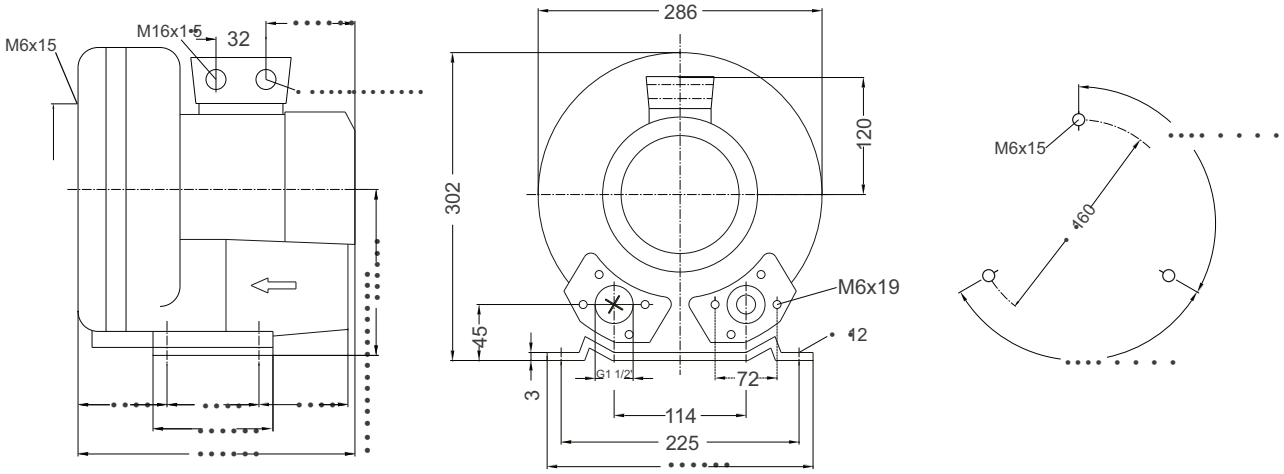

MIT BLOWER PARAMERTER									
Model	Frequency Hz	Power kW	Voltage V	Current A	Air Flow m³/h	Pressure		Noice dB (A)	Weight kg
						Vacuum mbar	Head mbar		
1~ 50/60Hz IP54 Protection Class F									
MIT B4TT-M-113	50	1.3	200-240	7.3	145	-150	190	63	16
MIT B4TT-M-113	60	1.5	220-275	8.3	175	-180	190	64	16

MIT Blowers have been tested under the following condition:
Performance tables were created by testing it with the aspiration of air at a temperature of 15 °C under 1 atm pressure.
If the temperature around the aspirated air and the blower is not more than 25 °C, the total pressure differences are as shown in the performance tables.
A deviation of +- 10% in values may occur.

MIT B5TT-M-116 Series Technical Data Sheet

MIT Blower Performance Curves

Vacuum Selection Curve

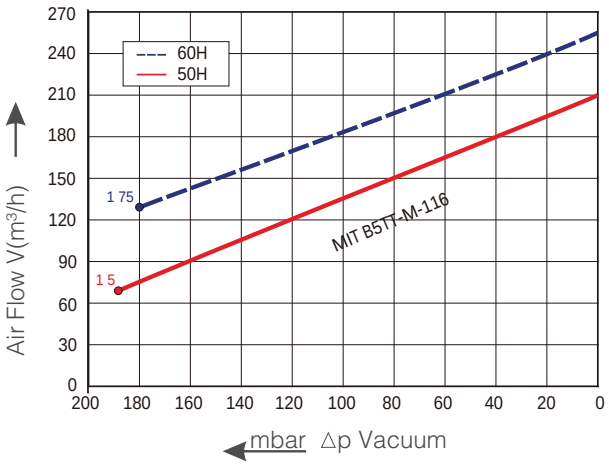

Compressor Selection Curves

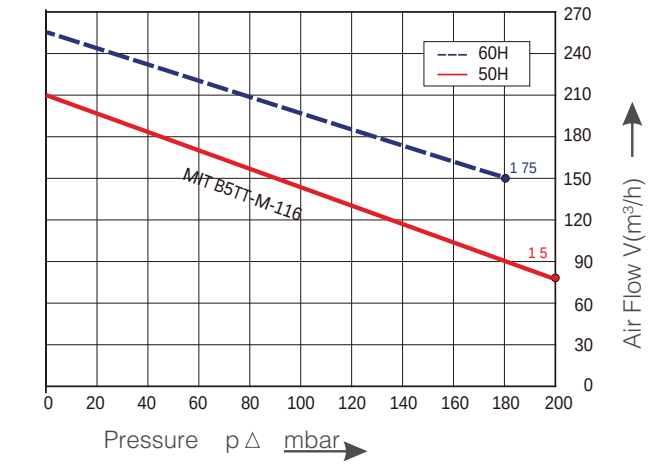

MIT Blower Technical Drawing

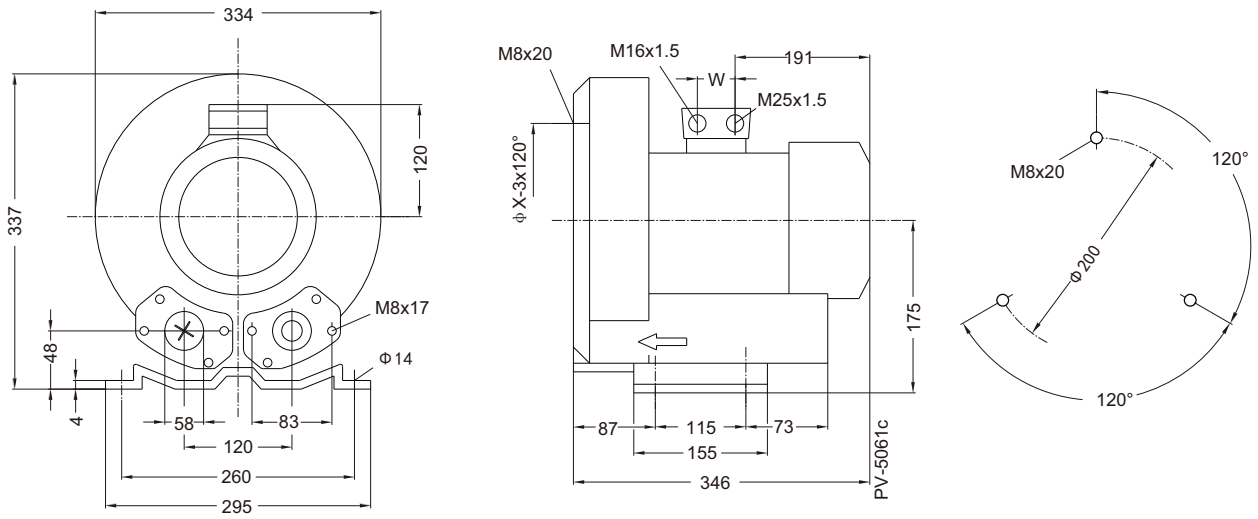

MIT BLOWER PARAMERTER									
Model	Frequency Hz	Power kW	Voltage V	Current A	Air Flow m³/h	Pressure		Noice dB (A)	Weight kg
						Vacuum mbar	Head mbar		
1~ 50/60Hz IP54 Protection Class F									
MIT B5TT-M-116	50	1.5	200-240	8	210	-190	200	64	24
MIT B5TT-M-116	60	1.75	220-275	9	255	-180	180	70	24

MIT Blowers have been tested under the following condition:
Performance tables were created by testing it with the aspiration of air at a temperature of 15 °C under 1 atm pressure.
If the temperature around the aspirated air and the blower is not more than 25 °C, the total pressure differences are as shown in the performance tables.
A deviation of +- 10% in values may occur.

MIT B2CC-207 Series Technical Data Sheet

MIT Blower Performance Curves

Vacuum Selection Curve

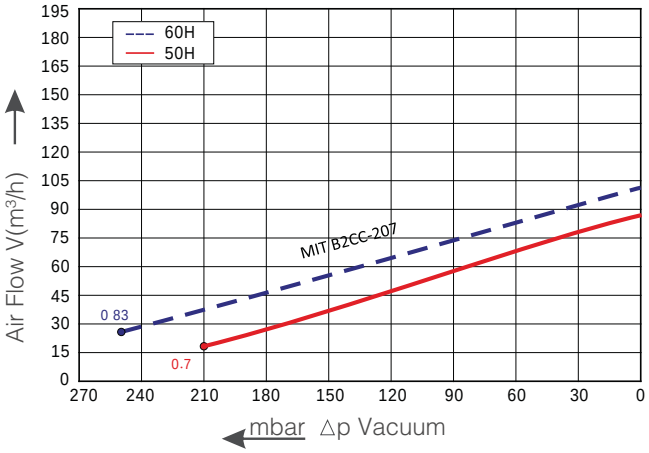

Compressor Selection Curves

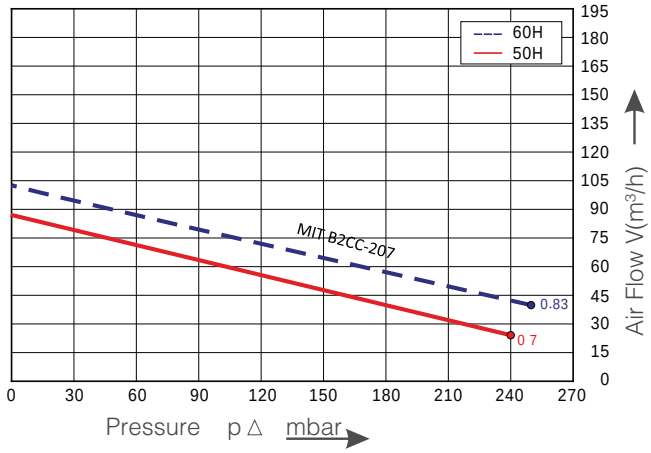

MIT Blower Technical Drawing

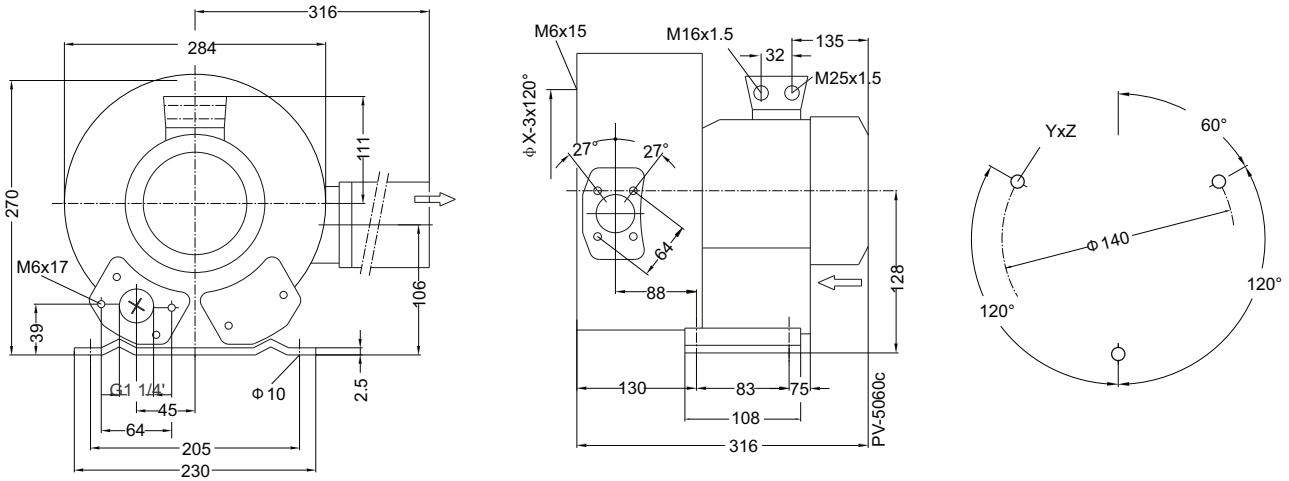

MIT BLOWER PARAMERTER									
Model	Frequency Hz	Power kW	Voltage V	Current A	Air Flow m³/h	Pressure		Noice dB (A)	Weight kg
						Vacuum mbar	Head mbar		
3~ 50/60Hz IP54 Protection Class F									
MIT B2CC-207	50	0,7	200-240△345-415Y	3.8 △2.2Y	88	-210	240	55	14
MIT B2CC-207	60	0,83	220-275△380-480Y	3.75 △2.15Y	103	-250	250	61	14

MIT Blowers have been tested under the following condition:
Performance tables were created by testing it with the aspiration of air at a temperature of 15 °C under 1 atm pressure.
If the temperature around the aspirated air and the blower is not more than 25 °C, the total pressure differences are as shown in the performance tables.
A deviation of +- 10% in values may occur.

MIT B5CC-230 Series Technical Data Sheet

MIT Blower Performance Curves

Vacuum Selection Curve

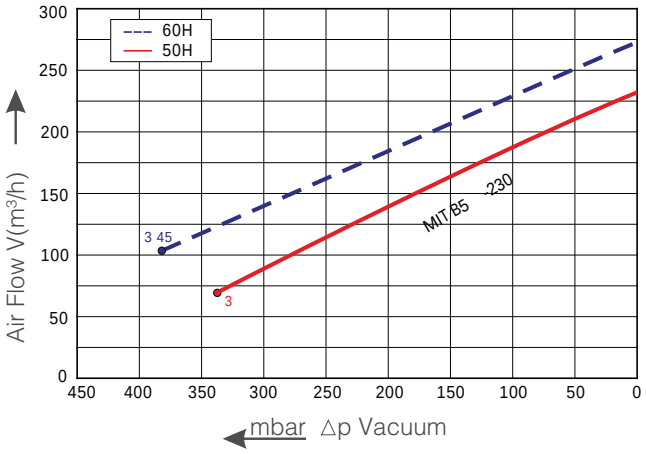

Compressor Selection Curves

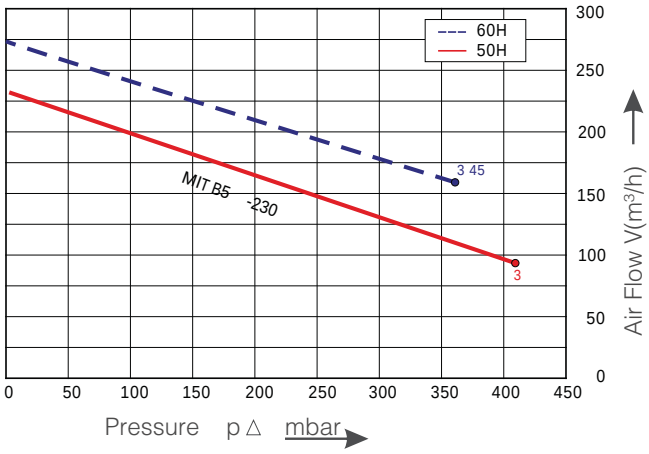

MIT Blower Technical Drawing

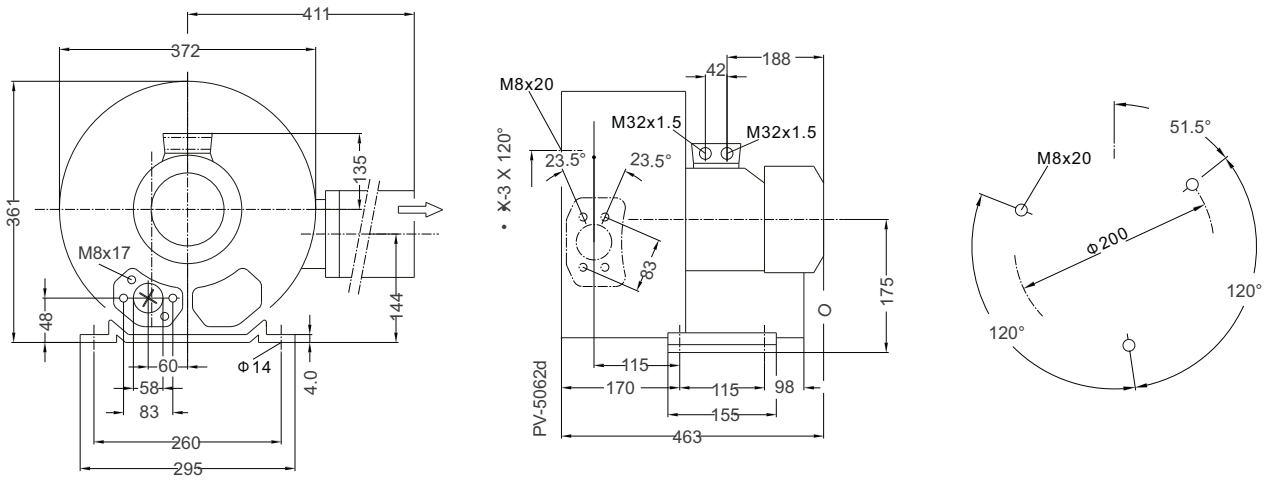

MIT BLOWER PARAMERTER									
Model	Frequency Hz	Power kW	Voltage V	Current A	Air Flow m³/h	Pressure		Noice dB (A)	Weight kg
						Vacuum mbar	Head mbar		
3~ 50/60Hz IP54 Protection Class F									
MIT B5CC-230	50	3.0	200-240Δ345-415Y	12.5 Δ 7.2Y	230	-340	410	72	39
MIT B5CC-230	60	3.45	220-275Δ380-480Y	12.5 Δ 7.3Y	275	-380	360	74	39

MIT Blowers have been tested under the following condition:
Performance tables were created by testing it with the aspiration of air at a temperature of 15 °C under 1 atm pressure.
If the temperature around the aspirated air and the blower is not more than 25 °C, the total pressure differences are as shown in the performance tables.
A deviation of +- 10% in values may occur.

MIT B5CC-240 Series Technical Data Sheet

MIT Blower Performance Curves

Vacuum Selection Curve

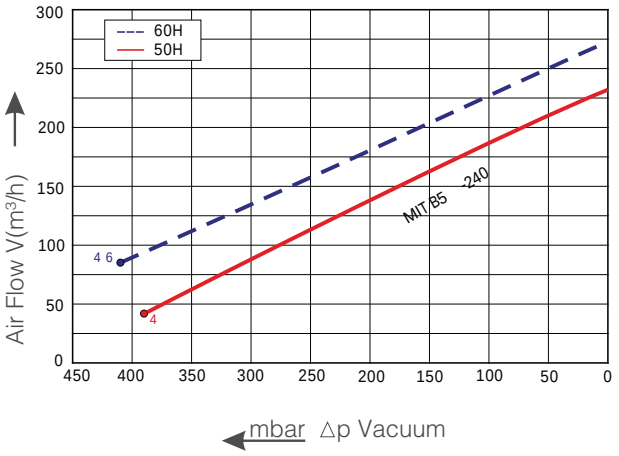

Compressor Selection Curves

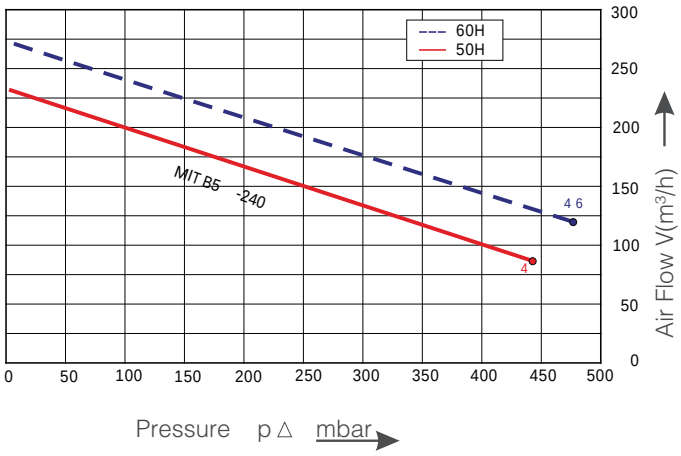

MIT Blower Technical Drawing

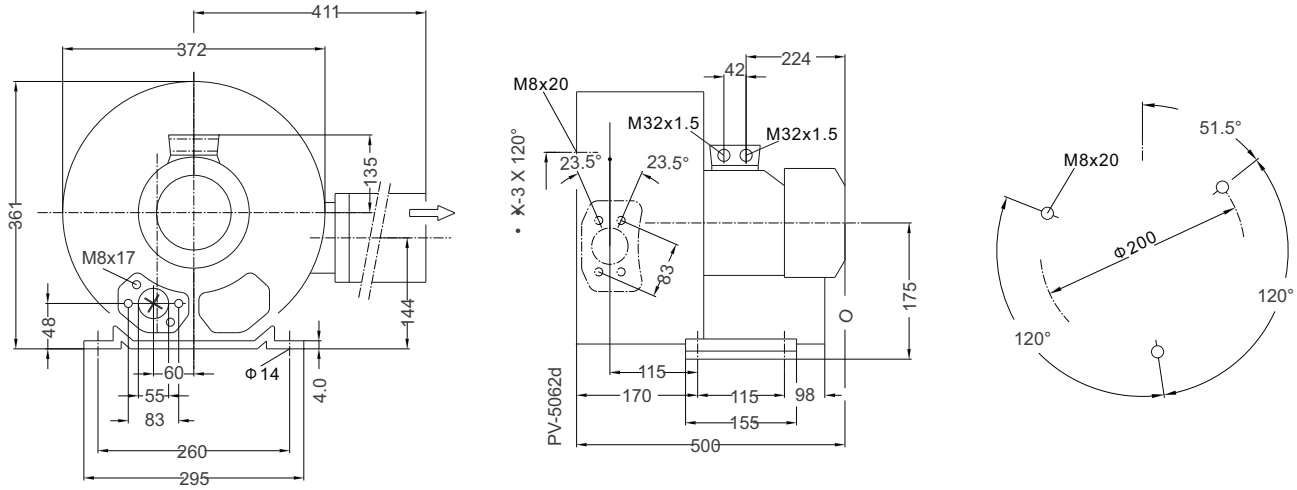

MIT BLOWER PARAMERTER									
Model	Frequency Hz	Power kW	Voltage V	Current A	Air Flow m³/h	Pressure		Noice dB (A)	Weight kg
						Vacuum mbar	Head mbar		
3~ 50/60Hz IP54 Protection Class F									
MIT B5CC-240	50	4.0	345-415 △600-690Y	9.5 △5.5Y	230	-390	440	72	43
MIT B5CC-240	60	4.60	380-480 △660-720Y	9.5 △5.5Y	275	-410	480	74	43

MIT Blowers have been tested under the following condition:
Performance tables were created by testing it with the aspiration of air at a temperature of 15 °C under 1 atm pressure.
If the temperature around the aspirated air and the blower is not more than 25 °C, the total pressure differences are as shown in the performance tables.
A deviation of +- 10% in values may occur.

MIT B7CC-222 Series Technical Data Sheet

MIT Blower Performance Curves

Vacuum Selection Curve

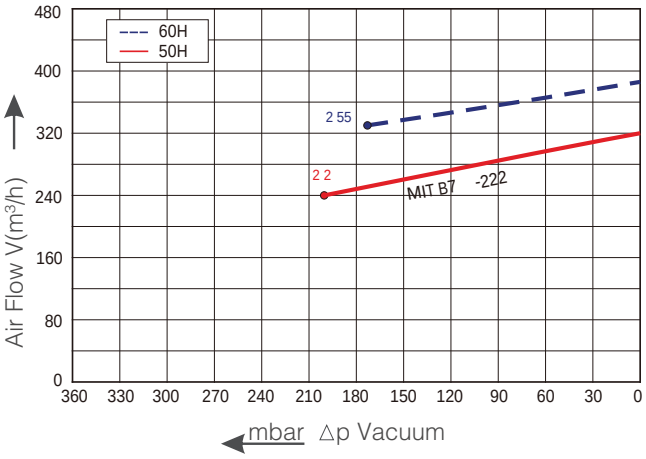

Compressor Selection Curves

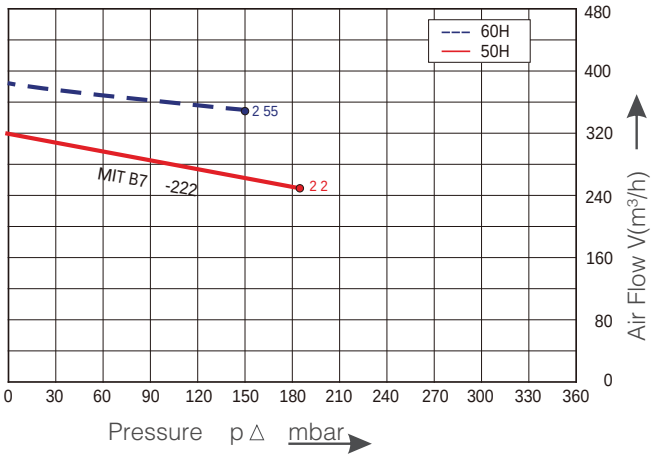

MIT Blower Technical Drawing

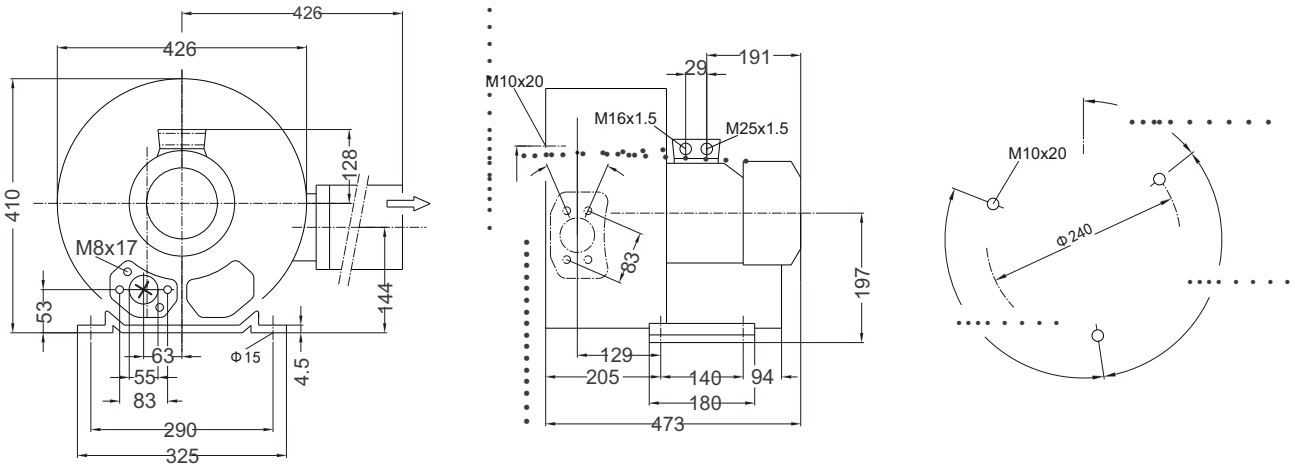

MIT BLOWER PARAMERTER									
Model	Frequency Hz	Power kW	Voltage V	Current A	Air Flow m³/h	Pressure		Noice dB (A)	Weight kg
						Vacuum mbar	Head mbar		
3~ 50/60Hz IP54 Protection Class F									
MIT B7CC-222	50	2.2	200-240△345-415Y	9.7 △ 5.6Y	320	-200	190	73	42
MIT B7CC-222	60	2.55	220-275△380-480Y	10 △5.8Y	385	-170	150	76	42

MIT Blowers have been tested under the following condition:
Performance tables were created by testing it with the aspiration of air at a temperature of 15 °C under 1 atm pressure.
If the temperature around the aspirated air and the blower is not more than 25 °C, the total pressure differences are as shown in the performance tables.
A deviation of +- 10% in values may occur.

MIT B7CC-230 Series Technical Data Sheet

MIT Blower Performance Curves

Vacuum Selection Curve

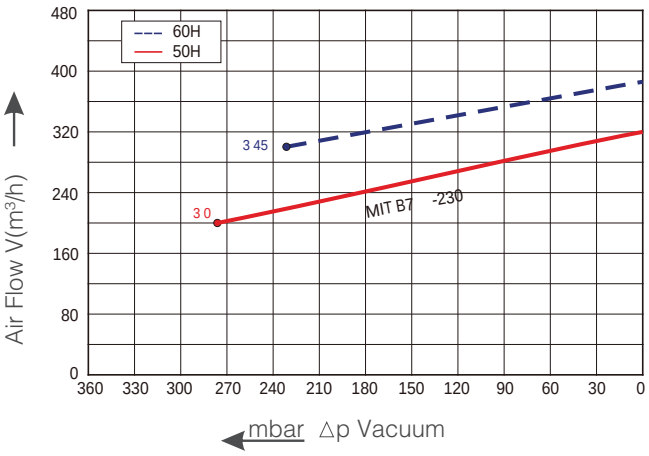

Compressor Selection Curves

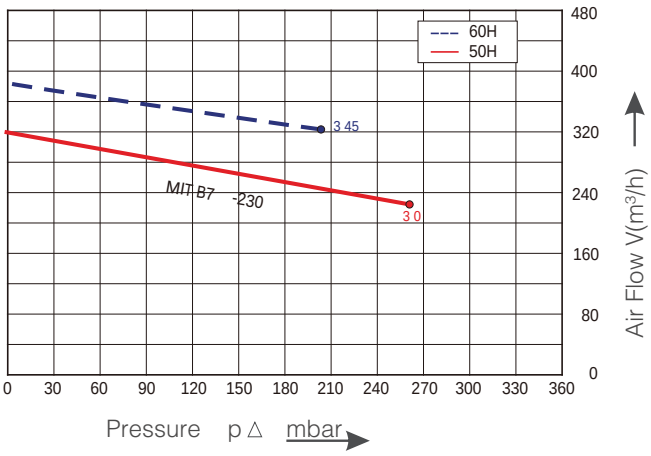

MIT Blower Technical Drawing

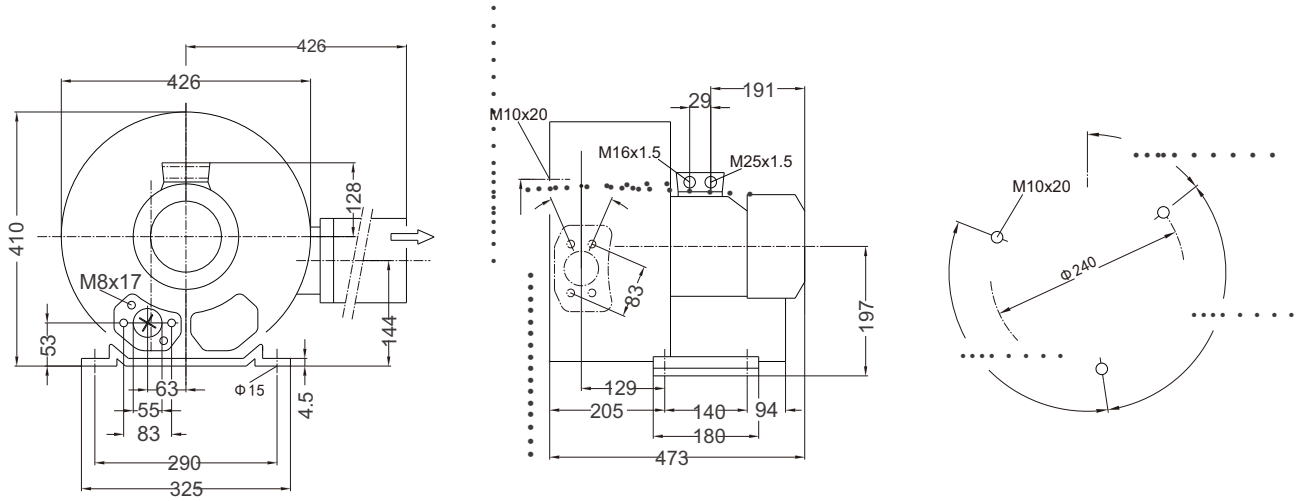

MIT BLOWER PARAMERTER									
Model	Frequency Hz	Power kW	Voltage V	Current A	Air Flow m³/h	Pressure		Noice dB (A)	Weight kg
						Vacuum mbar	Head mbar		
3~ 50/60Hz IP54 Protection Class F									
MIT B7CC-230	50	3.0	200-240△345-415Y	12.5 △ 7.2Y	320	-280	260	73	47
MIT B7CC-230	60	3.45	220-275△380-480Y	12.5 △ 7.3Y	385	-230	200	76	47

MIT Blowers have been tested under the following condition:
Performance tables were created by testing it with the aspiration of air at a temperature of 15 °C under 1 atm pressure.
If the temperature around the aspirated air and the blower is not more than 25 °C, the total pressure differences are as shown in the performance tables.
A deviation of +- 10% in values may occur.

MIT B7CC-243 Series Technical Data Sheet

MIT Blower Performance Curves

Vacuum Selection Curve

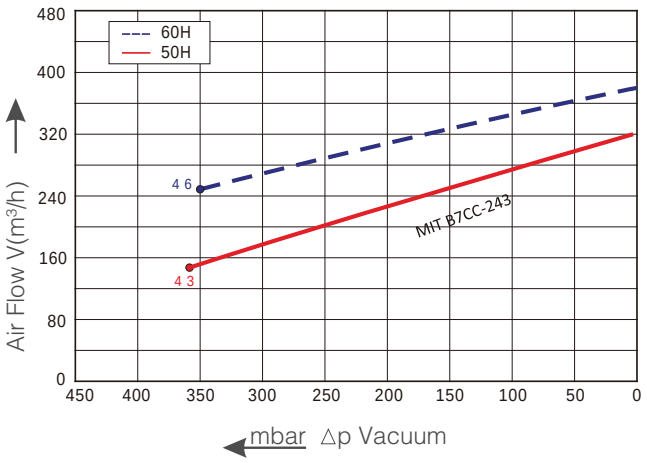

Compressor Selection Curves

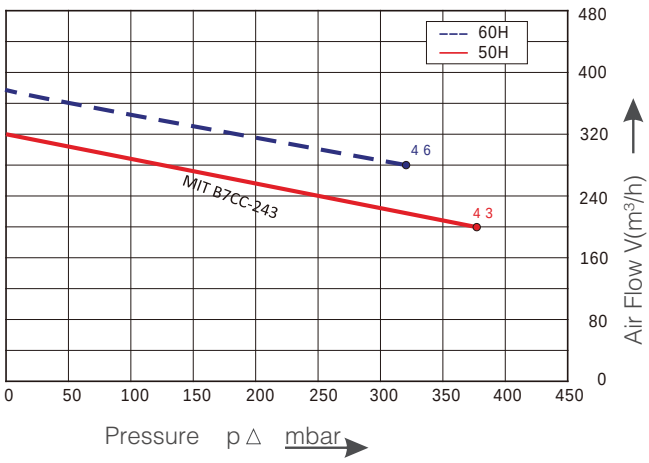

MIT Blower Technical Drawing

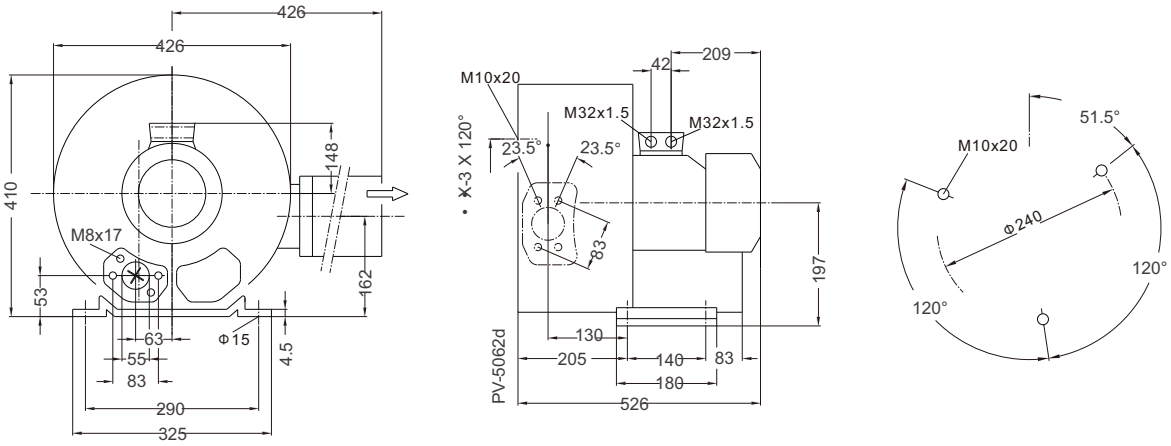

MIT BLOWER PARAMERTER									
Model	Frequency Hz	Power kW	Voltage V	Current A	Air Flow m³/h	Pressure		Noice dB (A)	Weight kg
						Vacuum mbar	Head mbar		
3~ 50/60Hz IP54 Protection Class F									
MIT B7CC-243	50	4.3	345-415 △600-690Y	10.0△ 5.8Y	320	-360	380	73	53
MIT B7CC-243	60	4.6	380-480 △660-720Y	10.4△ 6.0Y	385	-350	320	76	53

MIT Blowers have been tested under the following condition:
Performance tables were created by testing it with the aspiration of air at a temperature of 15 °C under 1 atm pressure.
If the temperature around the aspirated air and the blower is not more than 25 °C, the total pressure differences are as shown in the performance tables.
A deviation of +- 10% in values may occur.

MIT B7CC-255 Series Technical Data Sheet

MIT Blower Performance Curves

Vacuum Selection Curve

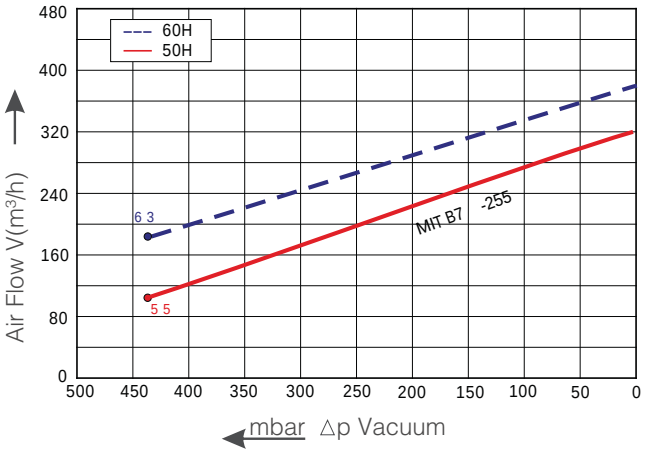

Compressor Selection Curves

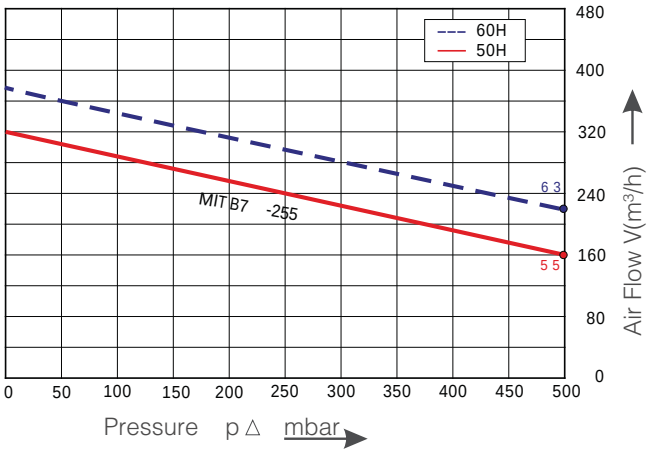

MIT Blower Technical Drawing

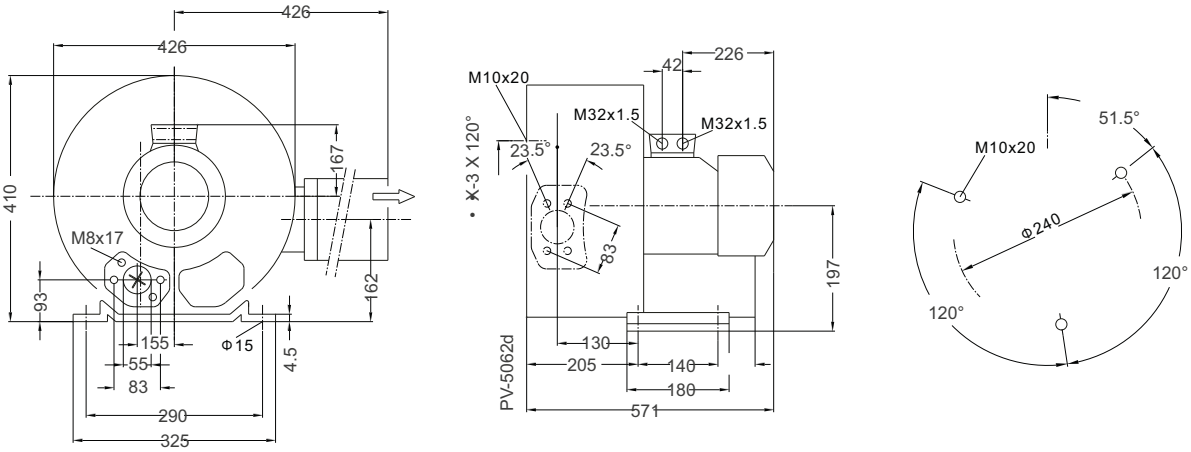

MIT BLOWER PARAMERTER									
Model	Frequency Hz	Power kW	Voltage V	Current A	Air Flow m³/h	Pressure		Noice dB (A)	Weight kg
						Vacuum mbar	Head mbar		
3~ 50/60Hz IP54 Protection Class F									
MIT B7CC-255	50	5.5	345-415 △ 600-690Y	13.3 △ 7.7Y	320	-440	500	73	70
MIT B7CC-255	60	6.3	380-480 △ 660-720Y	13.3 △ 7.7Y	385	-440	500	76	70

MIT Blowers have been tested under the following condition:
Performance tables were created by testing it with the aspiration of air at a temperature of 15 °C under 1 atm pressure.
If the temperature around the aspirated air and the blower is not more than 25 °C, the total pressure differences are as shown in the performance tables.
A deviation of +- 10% in values may occur.

MIT B7CC-275 Series Technical Data Sheet

MIT Blower Performance Curves

Vacuum Selection Curve

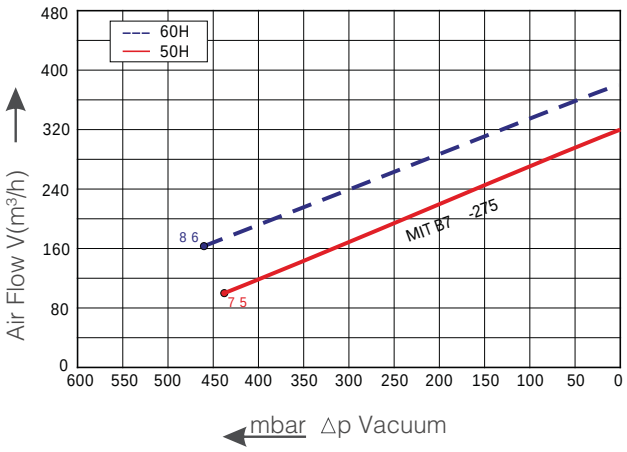

Compressor Selection Curves

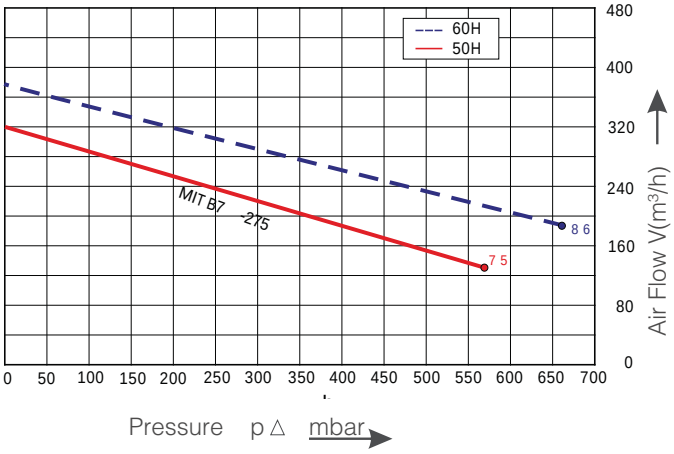

MIT Blower Technical Drawing

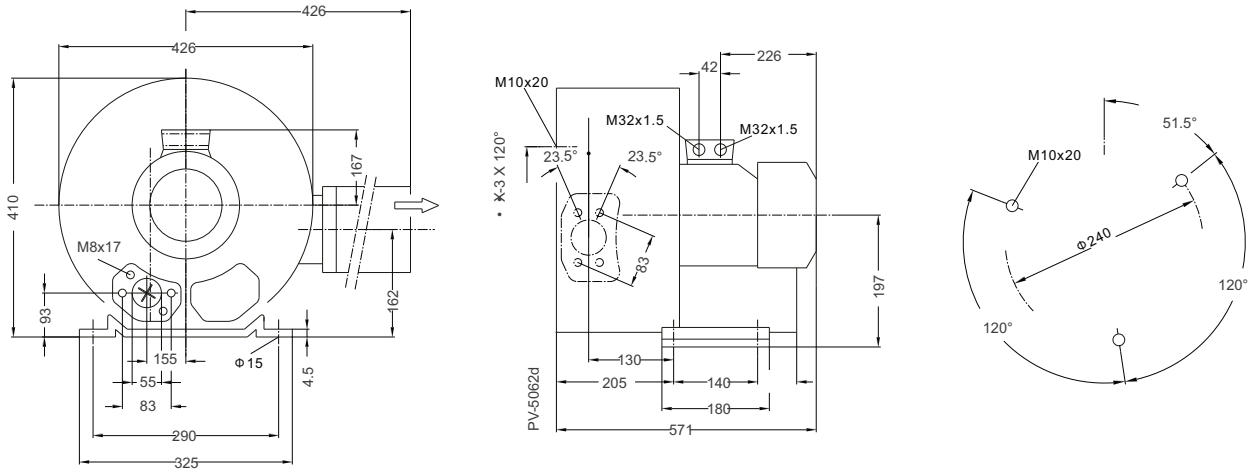

MIT BLOWER PARAMERTER									
Model	Frequency Hz	Power kW	Voltage V	Current A	Air Flow m³/h	Pressure		Noice dB (A)	Weight kg
						Vacuum mbar	Head mbar		
3~ 50/60Hz IP54 Protection Class F									
MIT B7CC-275	50	7.5	345-415△600-690Y	16.7△ 9.6Y	320	-440	570	73	77
MIT B7CC-275	60	8.6	380-480△660-720Y	17.3△10.0Y	385	-460	660	76	77

MIT Blowers have been tested under the following condition:
Performance tables were created by testing it with the aspiration of air at a temperature of 15 °C under 1 atm pressure.
If the temperature around the aspirated air and the blower is not more than 25 °C, the total pressure differences are as shown in the performance tables.
A deviation of +- 10% in values may occur.

MIT B8CC-275 Series Technical Data Sheet

MIT Blower Performance Curves

Vacuum Selection Curve

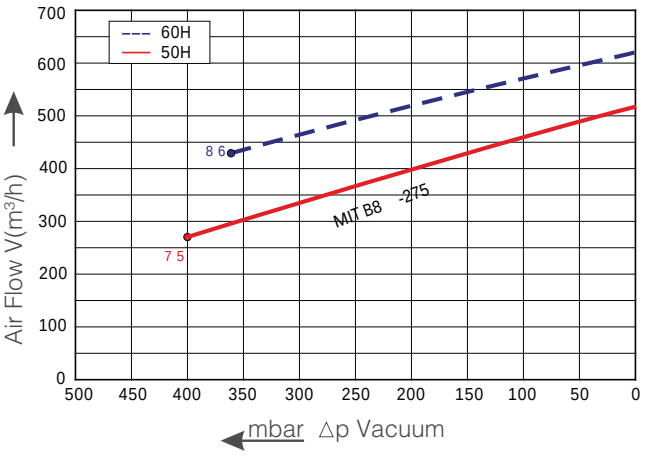

Compressor Selection Curves

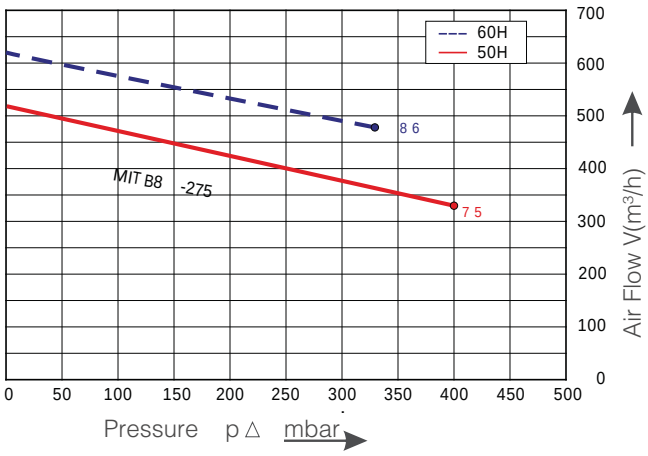

MIT Blower Technical Drawing

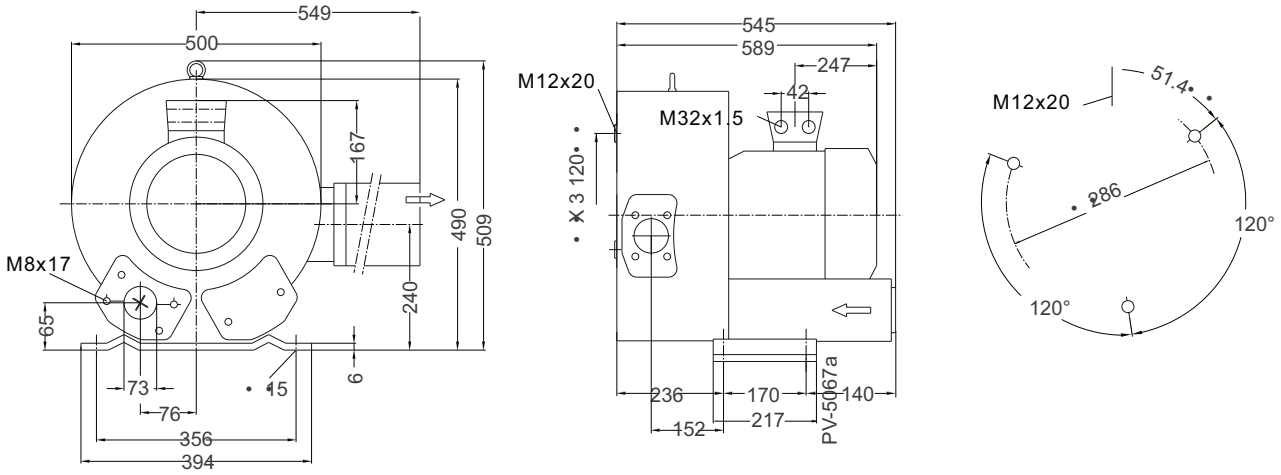

MIT BLOWER PARAMERTER									
Model	Frequency Hz	Power kW	Voltage V	Current A	Air Flow m³/h	Pressure		Noice dB (A)	Weight kg
						Vacuum mbar	Head mbar		
3~ 50/60Hz IP54 Protection Class F									
MIT B8CC-275	50	7.5	345-415 △ 600-690Y	16.7△ 9.6Y	520	-400	400	74	83
MIT B8CC-275	60	8.6	380-480 △ 660-720Y	17.3 △ 10.0Y	620	-360	330	78	83

MIT Blowers have been tested under the following condition:
Performance tables were created by testing it with the aspiration of air at a temperature of 15 °C under 1 atm pressure.
If the temperature around the aspirated air and the blower is not more than 25 °C, the total pressure differences are as shown in the performance tables.
A deviation of +- 10% in values may occur.

MIT B8CC-2110 Series Technical Data Sheet

MIT Blower Performance Curves

Vacuum Selection Curve

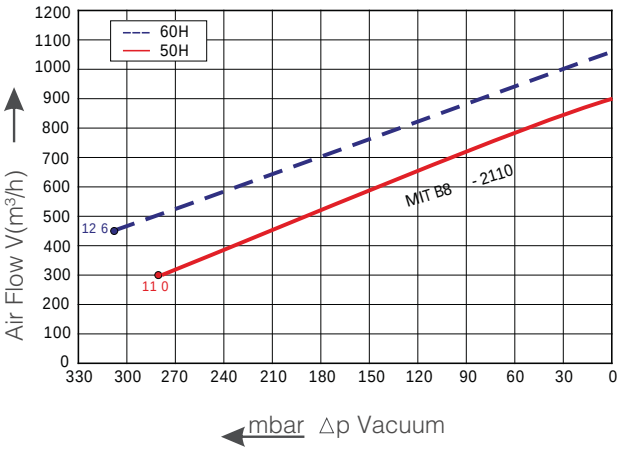

Compressor Selection Curves

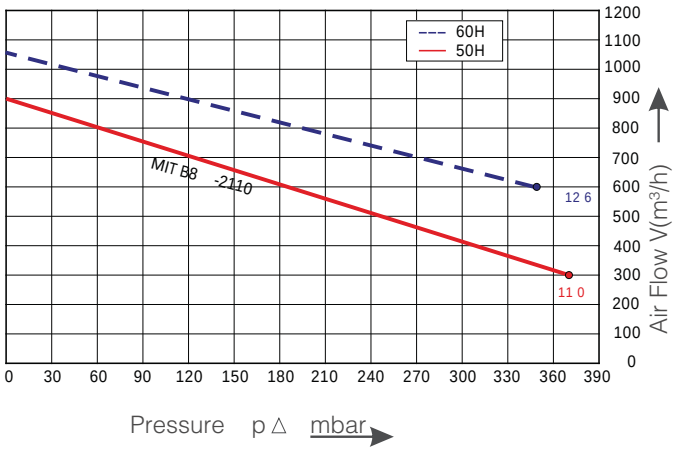

MIT Blower Technical Drawing

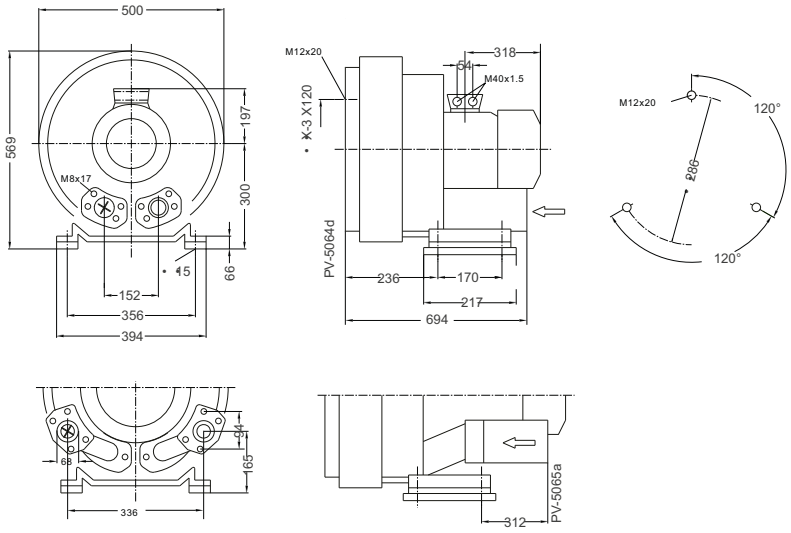

MIT BLOWER PARAMERTER									
Model	Frequency Hz	Power kW	Voltage V	Current A	Air Flow m³/h	Pressure		Noice dB (A)	Weight kg
						Vacuum mbar	Head mbar		
3~ 50/60Hz IP54 Protection Class F									
MIT B8CC-2110	50	11.0	345-415 △ 600-690Y	28.0 △ 16.2Y	900	-280	370	74	110
MIT B8CC-2110	60	12.6	380-480 △ 660-720Y	29.0 △ 16.7Y	1050	-310	350	78	110

MIT Blowers have been tested under the following condition:
Performance tables were created by testing it with the aspiration of air at a temperature of 15 °C under 1 atm pressure.
If the temperature around the aspirated air and the blower is not more than 25 °C, the total pressure differences are as shown in the performance tables.
A deviation of +- 10% in values may occur.

MIT B8CC-HP-2110 Series Technical Data Sheet

MIT Blower Performance Curves

Vacuum Selection Curve

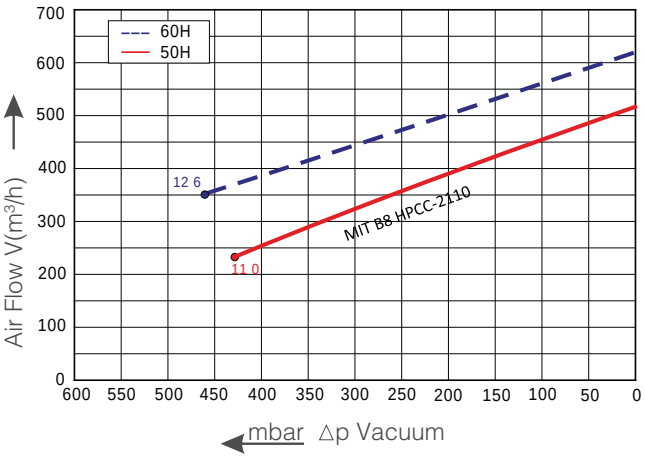

Compressor Selection Curves

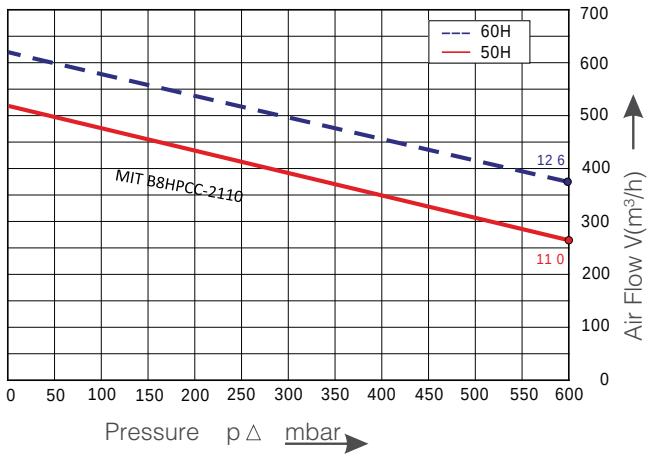

MIT Blower Technical Drawing

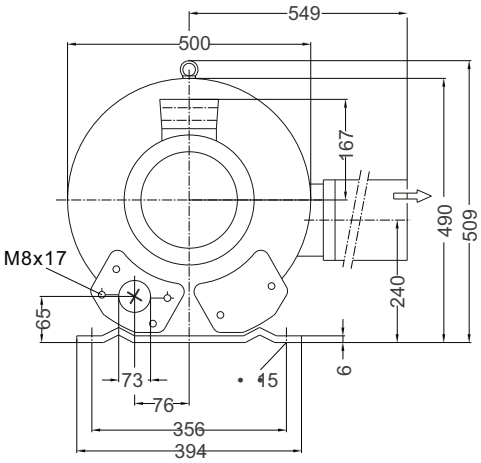

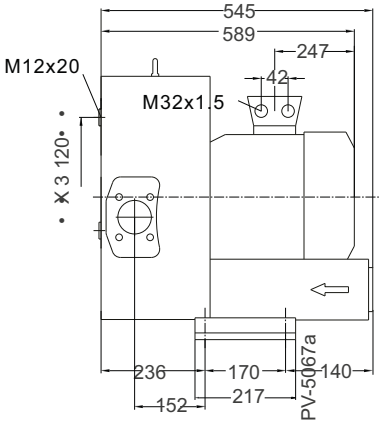

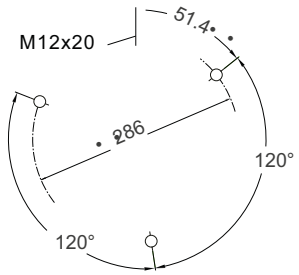

MIT BLOWER PARAMERTER									
Model	Frequency Hz	Power kW	Voltage V	Current A	Air Flow m³/h	Pressure		Noice dB (A)	Weight kg
						Vacuum mbar	Head mbar		
3~ 50/60Hz IP54 Protection Class F									
MIT B8CC-HP-2110	50	11.0	345-415 △600-690Y	28.0 △16.2Y	520	-430	600	74	104
MIT B8CC-HP-2110	60	12.6	380-480 △660-720Y	29.0 △16.7Y	620	-460	600	78	104

MIT Blowers have been tested under the following condition:
Performance tables were created by testing it with the aspiration of air at a temperature of 15 °C under 1 atm pressure.
If the temperature around the aspirated air and the blower is not more than 25 °C, the total pressure differences are as shown in the performance tables.
A deviation of +- 10% in values may occur.

MIT B9CC-2225 25,0 KW Series Technical Data Sheet

MIT Blower Performance Curves

Vacuum Selection Curve

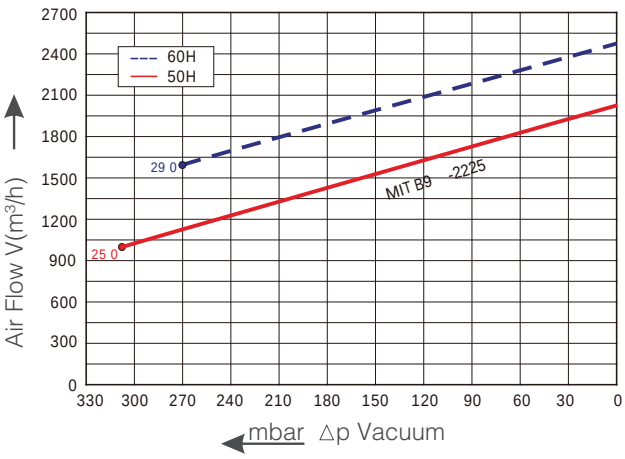

Compressor Selection Curves

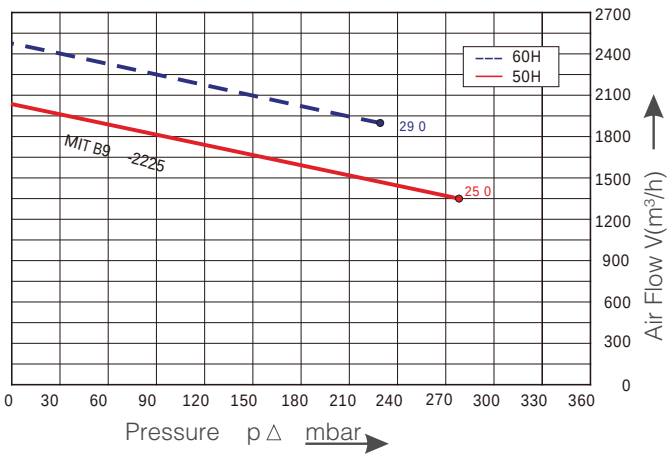

MIT Blower Technical Drawing

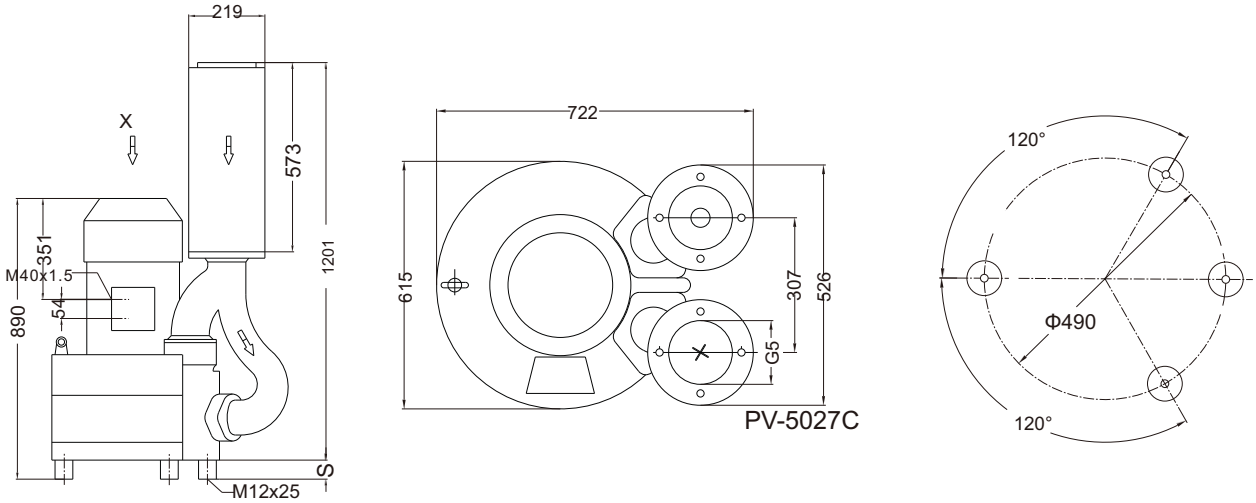

MIT BLOWER PARAMERTER									
Model	Frequency Hz	Power kW	Voltage V	Current A	Air Flow m³/h	Pressure		Noice dB (A)	Weight kg
						Vacuum mbar	Head mbar		
3~ 50/60Hz IP54 Protection Class F									
MIT B9CC-2225	50	25.0	345-415△600-690Y	52.0△30.0Y	2050	-310	280	75	235
MIT B9CC-2225	60	29.0	380-480△660-720Y	52.0△30.0Y	2480	-270	230	84	235

MIT Blowers have been tested under the following condition:
Performance tables were created by testing it with the aspiration of air at a temperature of 15 °C under 1 atm pressure.
If the temperature around the aspirated air and the blower is not more than 25 °C, the total pressure differences are as shown in the performance tables.
A deviation of +- 10% in values may occur.

MIT B9CC-HP-2225 25,0 KW Series Technical Data Sheet

MIT Blower Performance Curves

Vacuum Selection Curve

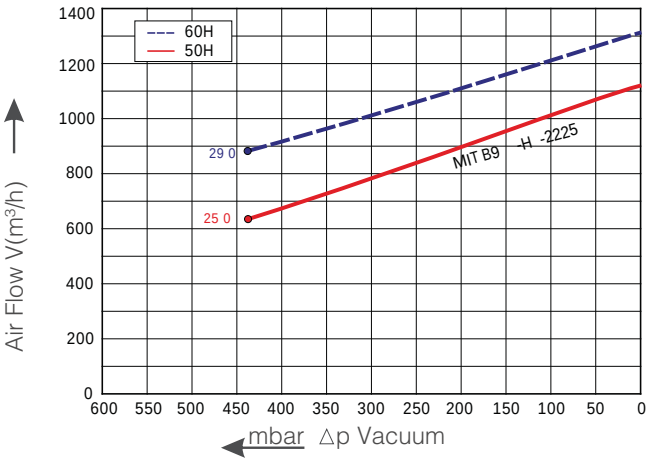

Compressor Selection Curves

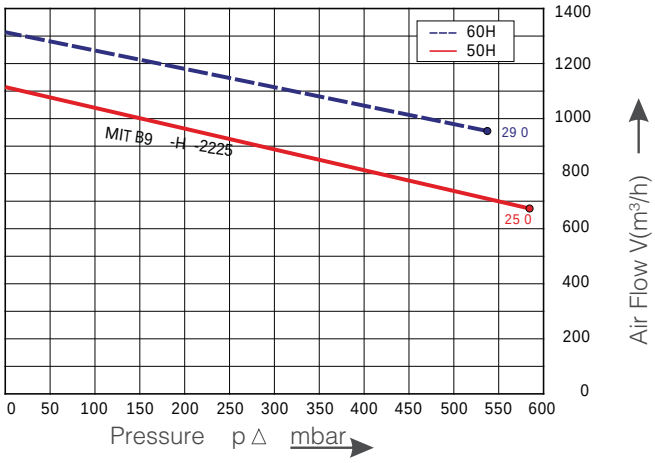

MIT Blower Technical Drawing

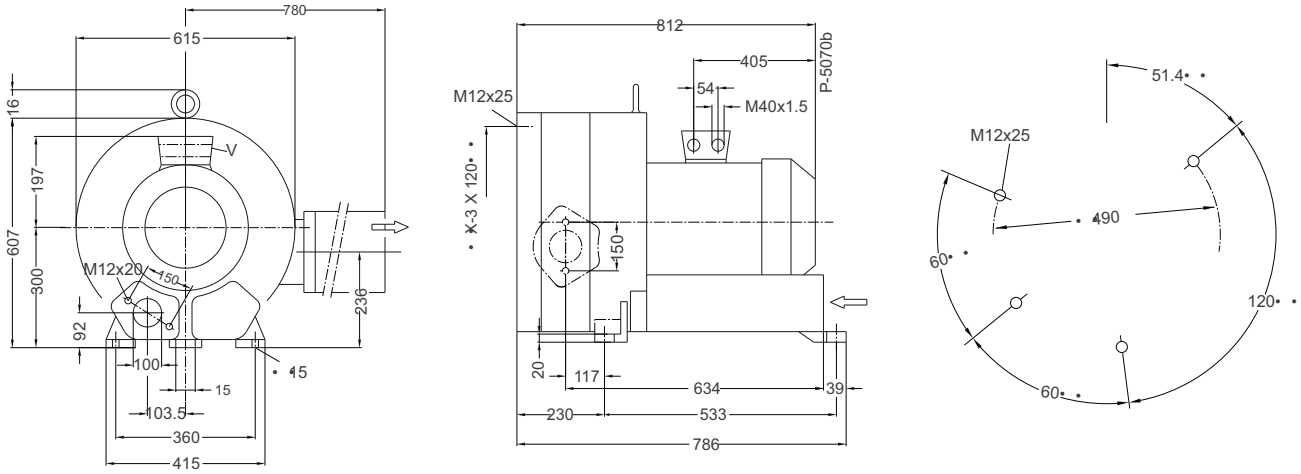

MIT BLOWER PARAMERTER									
Model	Frequency Hz	Power kW	Voltage V	Current A	Air Flow m³/h	Pressure		Noice dB (A)	Weight kg
						Vacuum mbar	Head mbar		
3~ 50/60Hz IP54 Protection Class F									
MIT B9CC-HP-2225	50	25.0	345-415 Δ 600-690Y	52.0 Δ 30.0Y	1110	-440	590	75	211
MIT B9CC-HP-2225	60	29.0	380-480 Δ 660-720Y	52.0 Δ 30.0Y	13130	-440	540	84	211

MIT Blowers have been tested under the following condition:
Performance tables were created by testing it with the aspiration of air at a temperature of 15 °C under 1 atm pressure.
If the temperature around the aspirated air and the blower is not more than 25 °C, the total pressure differences are as shown in the performance tables.
A deviation of +- 10% in values may occur.

EKİN ENDÜSTRİYEL

ROOTS
BLOWERS

FLUID TRANSFER PRODUCTS

HG Series Blower

HG series blower is a positive displacement type of machine used to convey air and gas and is widely used in almost every industry, we has earned a high reputation in pressure and vacuum area by HG series three lobe roots blower for it's high efficiency and energy saving.

With a broad capacity range up to 10,000 m3/hr and pressure range up to 1 bar for pressure performance and capacimbty range up to 10,000 m3/hr and vacuum range up to -500 mbar for vacuum performance, easy handling and quieter operation, HG series blower has been used for delivering air for sewage water treatment plant, shrimp aquaculture plant, cement plant, power plant, metallurgy, mining plant, sugar plant, pneumatic conveying system, and delivering gas for biogas power plant, landfili gas (LFG) power plant, gas extraction plants, oil and gas refinery plant, steel plant, foundry plant, metallurgical plant, chemical Plant etc.

EKIN ENDUSTRIYEL

HG Three Lobe Roots Blower
Pressure Performance Table

Qs: Inlet Air Flow Rate (m^3/min)
La: Bar Power (kW)
Po : Motor Power (kW)

Model	RPM	100 mBar			200 mBar			300 mBar			400 mBar			500 mBar			600 mBar			700 mBar			800 mBar			900 mBar			1000 mBar			Number Of Motor Poles
		Qs	La	Po	Qs	La	Po	Qs	La	Po	Qs	La	Po	Qs	La	Po	Qs	La	Po	Qs	La	Po	Qs	La	Po	Qs	La	Po	Qs	La	Po	
HG-50	1450	1.12	0.7	1.1	0.88	1.0	1.5	0.75	1.2	1.5	0.63	1.5	2.2	0.5	1.8	2.2																4
	2000	1.76	1.0	1.5	1.42	1.4	2.2	1.33	1.7	2.2	1.23	2.1	3	1.19	2.5	3	1.00	2.9	4													4
	2500	2.34	1.2	1.5	2	1.7	2.2	1.82	2.1	3	1.72	2.6	4	1.6	3.1	4	1.54	3.6	5.5	1.43	4	5.5	1.38	4.5	5.5							2
	3000	2.93	1.4	2.2	2.59	1.9	3	2.41	2.5	3	2.21	3.1	4	2.06	3.7	5.5	1.93	4.2	5.5	1.88	4.8	7.5	1.8	5.4	7.5	1.7	6	7.5				2
	3500	3.51	1.6	2.2	3.17	2.2	3	2.99	2.9	4	2.79	3.6	5.5	2.64	4.2	5.5	2.51	4.9	7.5	2.38	5.6	7.5	2.25	6.2	7.5	2.18	6.9	11	2.1	7.6	11	2
	4000	4.1	1.8	2.2	3.76	2.5	3	3.58	3.3	4	3.38	4.1	5.5	3.23	4.8	7.5	3.1	5.6	7.5	2.96	6.3	7.5	2.84	7.1	11	2.77	7.9	11	2.7	8.6	11	2
	4500	4.68	2	3	4.34	2.8	4	4.16	3.7	5.5	3.95	4.5	5.5	3.81	5.4	7.5	3.68	6.3	7.5	3.53	7.1	11	3.42	8	11	3.35	8.8	11	3.29	9.7	15	2
HG-65	2000	2.98	1.4	2.2	2.46	2.1	3	2.13	2.7	4	1.78	3.4	4	1.53	4.0	5.5	1.33	4.6	5.5													4
	2500	3.97	1.8	2.2	3.45	2.6	3	3.12	3.4	4	2.77	4.2	5.5	2.52	5.0	7.5	2.32	5.8	7.5													2
	3000	4.95	2.2	3	4.43	3.1	4	4.1	4.1	5.5	3.75	5.1	7.5	3.5	6	7.5	3.3	7	11	3.14	8	11	3	8.9	11	2.89	9.9	15	2.82	10.8	15	2
	3500	5.93	2.5	3	5.41	3.7	5.5	5.08	4.8	7.5	4.73	5.9	7.5	4.48	7	11	4.28	8.1	11	4.12	9.3	11	3.98	10.4	15	3.87	11.5	15	3.8	12.6	15	2
	4000	6.91	2.9	4	6.39	4.2	5.5	6.06	5.5	7.5	5.71	6.7	11	5.46	8	11	5.26	9.3	11	5.1	10.6	15	4.96	11.9	15	4.85	13.1	18.5	4.78	14.4	18.5	2
	4500	7.89	3.2	4	7.73	4.7	5.5	7.04	6.1	7.5	6.69	7.6	11	6.44	9	11	6.24	10.5	15	6.08	11.9	15	5.94	13.3	18.5	5.83	14.8	18.5	5.76	16.2	22	2
HG-80	2000	6.01	2.3	3	5.51	3.5	5.5	5.17	4.7	5.5	4.88	5.9	7.5	4.65	7.0	11	4.46	8.2	11													4
	2300	7.12	2.7	4	6.63	4.0	5.5	6.29	5.4	7.5	6.01	6.8	11	5.78	8.1	11	5.59	9.5	11													2
	2500	7.86	2.9	4	7.38	4.4	5.5	7.05	5.9	7.5	6.76	7.3	11	6.53	8.8	11	6.34	10.3	15	6.18	11.8	15	6.04	13.3	18.5	5.93	14.8	18.5	5.83	16.3	22	2
	2800	8.98	3.3	4	8.5	4.9	7.5	8.17	6.6	11	7.89	8.2	11	7.67	9.9	15	7.48	11.5	15	7.31	13.2	18.5	7.18	14.8	18.5	7.06	16.5	22	6.95	18.1	22	2
	3000	9.72	3.6	5.5	9.25	5.4	7.5	8.92	7.1	11	8.64	8.9	11	8.42	10.7	15	8.23	12.5	15	8.07	14.3	18.5	7.93	16	18.5	7.81	17.8	22	7.71	19.6	30	2
	3300	10.8	4	5.5	10.4	5.9	7.5	10.1	7.9	11	9.77	9.8	15	9.55	11.8	15	9.36	13.8	18.5	9.2	15.7	18.5	9.06	17.7	22	8.94	19.6	30	8.83	21.6	30	2
	3500	11.5	4.2	5.5	11.1	6.3	7.5	10.8	8.3	11	10.5	10.4	15	10.3	12.5	15	10.1	14.6	18.5	9.95	16.6	22	9.81	18.7	22	9.69	20.8	30	9.59	22.9	30	2
	3800	12.7	4.6	5.5	12.2	6.8	11	11.8	9.1	11	11.6	11.3	15	11.4	13.6	18.5	11.2	15.8	18.5	11.1	18.1	22	10.9	20.3	30	10.8	22.6	30	10.7	24.8	30	2
HG-100	2000	9.13	3.2	4	8.43	5.0	7.5	7.93	6.7	11	7.51	8.5	11	7.17	10.3	15	6.88	12.1	15													4
	2300	10.8	3.7	5.5	10.1	5.8	7.5	9.62	7.8	11	9.21	9.9	15	8.87	11.9	15	8.59	14.0	18.5													2
	2500	11.9	4.1	5.5	11.2	6.3	7.5	10.8	8.6	11	10.3	10.8	15	10	13	15	9.73	15.2	18.5	9.48	17.5	22	9.26	19.7	30	9.08	21.9	30	8.91	24.1	30	2
	2800	13.6	4.7	5.5	12.9	7.2	11	12.5	9.7	15	12	12.2	15	11.7	14.7	18.5	11.4	17.2	22	11.2	19.7	30	11	22.2	30	10.8	24.7	30	10.6	27.2	37	2
	3000	14.7	5.1	7.5	14.1	7.8	11	13.7	10.4	15	13.2	13.1	18.5	12.8	15.8	18.5	12.6	18.5	22	12.3	21.2	30	12.1	23.8	30	11.9	26.5	37	11.7	29.2	37	2
	3300	16.4	5.5	7.5	15.7	8.5	11	15.4	11.4	15	14.9	14.4	18.5	14.6	17.3	22	14.3	20.2	30	14	23.2	30	13.8	26.1	30	13.6	29.1	37	13.5	32	37	2
	3500	17.5	5.8	7.5	16.9	8.9	11	16.5	12.1	15	16	15.2	18.5	15.7	18.3	22	15.4	21.4	30	15.2	24.5	30	14.9	27.7	37	14.8	30.8	37	14.6	33.9	45	2
	3800	19.2	6.3	7.5	18.5	9.7	15	18.2	13	15	17.7	16.4	22	17.4	19.8	30	17.1	23.2	30	16.9	26.6	37	16.7	30	37	16.5	33.3	45	16.3	36.7	45	2

Model	RPM	100 mBar			200 mBar			300 mBar			400 mBar			500 mBar			600 mBar			700 mBar			800 mBar			900 mBar			1000 mBar			Number Of Motor Poles
		Qs	La	Po	Qs	La	Po	Qs	La	Po	Qs	La	Po	Qs	La	Po	Qs	La	Po	Qs	La	Po	Qs	La	Po	Qs	La	Po	Qs	La	Po	
HG-125	1450	13.4	4.1	5.5	12.5	7.0	11	11.9	9.7	15	11.3	12.4	15	10.9	14.5	18.5	10.6	17.7	22													4
	1750	16.7	4.9	7.5	15.8	8.1	11	15.3	11.3	15	14.7	14.5	18.5	14.3	17.6	22	13.9	20.8	30													4
	2000	19.5	5.6	7.5	18.6	9.2	11	18	12.9	15	17.5	16.5	22	17.1	20.2	30	16.7	23.8	30	16.4	27.9	37	16.2	31.1	37	16	34.8	45	15.8	38.4	45	4
	2300	22.8	6.4	7.5	21.9	10.6	15	21.4	14.8	18.5	20.8	18.9	22	20.4	23.1	30	20	27.3	37	19.8	31.5	37	19.5	35.7	45	19.4	39.9	55	19.2	4 4	55	2
	2600	26.1	7.2	11	25.2	12	15	24.7	16.7	22	24.1	21.4	30	23.7	26.2	37	23.4	30.9	37	23.1	35.6	45	22.9	40.4	55	22.7	45.1	55	22.5	49.8	75	2
	2800	28.3	7.8	11	27.5	12.9	15	26.8	18	22	26.4	23.1	30	26	28.2	37	25.6	33.3	45	25.4	38.4	45	25.1	43.5	55	24.9	48.6	55	24.7	53.7	75	2
HG-150	1450	21.8	6.3	7.5	20.5	10.6	15	19.6	14.8	18.5	18.8	19.0	22	18.2	23.2	30	17.7	27.4	37													4
	1750	27.1	7.5	11	25.8	12.6	15	24.9	17.7	22	24.2	22.7	30	23.6	27.8	37	23.2	32.9	45													4
	2000	31.6	8.5	11	30.3	14.3	18.5	29.4	20.1	30	28.7	25.9	30	28.2	31.8	37	27.7	37.6	45	27.3	43.4	55	27	46.7	55	26.7	55	75	26.5	60.8	75	4
	2300	36.9	9.7	15	35.7	16.3	22	34.9	23	30	34.2	29.7	37	33.6	36.4	45	33.2	43	55	32.8	49.7	75	32.5	56.4	75	32.2	63	75	32	69.7	90	2
	2600	42.3	10.8	15	41.1	18.3	22	40.4	25.9	30	39.6	33.4	45	39.1	40.9	55	38.6	48.5	55	38.2	56	75	37.9	63.5	75	37.7	71.1	90	37.4	78.6	90	2
	2800	45.9	11.6	15	44.7	19.7	30	43.8	27.8	37	43.2	35.9	45	42.7	44	55	42.3	52.2	75	41.9	60.3	75	41.6	68.4	90	41.3	76.5	90	41.1	84.6	110	2
HG-175	1150	23.5	5.1	7.5	22.1	9.7	11	20.9	14.2	18.5	19.9	18.7	22	19.1	23.3	30	18.3	27.8	37													4
	1450	30.6	6.8	11	29.1	12.5	15	28.1	18.2	22	27.0	24.0	30	26.2	29.7	37	25.4	35.4	45													4
	1750	37.7	8.7	11	36.2	15.6	18.5	35.1	22.5	30	34.1	29.4	37	33.2	36.6	45	32.5	43.2	55	31.8	50.1	75	31.1									4
	2000	43.6	10.3	15	42.1	18.2	22	41	26.1	37	40	33.9	45	39.2	41.8	55	38.4	49.7	75	37.7	57.6	75	37									4
	2300	50.7	12.5	15	49.2	21.5	30	48	30.6	37	47.1	39.7	55	46.2	48.7	75	45.5	57.8	75	44.7	66.9	90	44.1									2
	2600	57.8	14.9	18.5	56.3	25.2	30	55.1	35.4	45	54.2	45.7	55	53.3	55.9	75	52.5	66.2	90	51.8	76.4	90	51.2									2
	2800	62.5	16.6	22	61	27.8	37	59.9	38.7	55	58.9	49.7	75	58	60.8	75	57.3	71.8	90	56.6	82.9	110	55.9									2
HG-200	970	38.6	10.4	15	36.6	17.8	22	35.0	25.1	30	33.9	32.5	45	32.9	39.9	55	32.0	47.3	55													4
	1250	51.5	13.5	18.5	49.5	22.9	30	48.0	32.4	45	46.8	41.9	55	45.9	51.4	75	45.1	60.8	75													4
	1450	60.7	15.4	18.5	58.7	26.3	37	57.3	37.3	45	56.1	48.3	55	55.2	59.3	75	54.4	70.3	90	53.8	81.3	110	53.1	92.3	110	52.6	103	132	52.2	114	132	4
	1600	67.6	16.8	22	65.6	28.9	37	64.2	41	55	63.1	53.2	75	62.1	65.3	75	61.3	77.4	90	60.7	89.5	110	60.1	102	132	59.6	114	132	59.2	126	160	4
	1750	74.5	18.3	22	72.5	31.5	37	71.1	44.8	55	70	58.1	75	69.1	71.3	90	68.3	84.6	110	67.6	97.9	132	67.1	111	160	66.6	124	160	66.2	138	160	4
	1900	81.4	19.8	30	79.5	34.2	45	78.1	48.6	55	77	63	75	76.1	77.5	90	75.3	91.9	110	74.6	106	132	74.1	121	160	73.6	135	160	73.1	150	185	4
HG-250	970	49.8	12.9	15	47.5	22.2	30	45.8	31.5	37	44.5	40.9	55	43.5	50.2	75	42.6	59.6	75													4
	1250	66.2	16.4	22	63.9	28.5	37	62.3	40.6	55	61.1	52.7	75	60.1	64.8	75	59.2	76.8	90													4
	1450	77.9	18.7	22	75.7	32.8	45	74.1	46.7	55	72.9	60.9	75	71.9	74.9	90	71.1	89	110	70.4	103	132	69.9	117	160							4
	1600	86.7	20.6	30	84.5	36.2	45	83	51.7	75	81.8	67.2	90	80.8	82.8	110	80	98.3	132	79.3	114	132	78.8	129	160							4
	1750	95.5	22.5	30	93.4	39.5	55	91.8	56.5	75	90.6	73.5	90	89.7	90.5	110	88.9	108	132	88.2	125	160	87.8	142	160							4
	1900	104	24.5	30	102	43	55	101	61.5	75	99.5	80.1	110	98.6	98.6	132	97.8	117	160	97.1	136	160	96.6	154	185							4

HG Three Lobe Roots Blower
Vacuum Performance Table

Qs: Inlet Air Flow Rate (m^3/min)
La: Bar Power (kW)
Po : Motor Power (kW)

Model	RPM	-100 Mbar			-200 mBar			-300 mBar			-400 mBar			-500 mBar			Number Of Motor Poles
		Qs	La	Po	Qs	La	Po	Qs	La	Po	Qs	La	Po	Qs	La	Po	
HG-50V	2000	1.70	1.00	1.5	1.30	1.40	2.2	1.00	1.70	2.2							4
	2500	2.29	1.20	1.5	1.78	1.70	2.2	1.54	2.10	3	1.36	2.6	4				2
	3000	2.88	1.4	2.2	2.37	1.9	3	2.03	2.5	3	1.85	3.1	4				2
	3500	3.46	1.6	2.2	2.95	2.2	3	2.61	2.9	4	2.33	3.6	5.5				2
	4000	4.05	1.8	2.2	3.54	2.5	3	3.2	3.3	4	2.92	4.1	5.5	2.68	4.8	7.5	2
	4500	4.63	2	3	4.12	2.8	4	3.78	3.7	5.5	3.5	4.5	5.5	3.16	5.4	7.5	2
HG-65V	2500	3.88	1.80	2.2	3.20	2.60	3	2.70	3.40	4	2.46	4.2	5.5				2
	3000	4.87	2.20	3	4.18	3.10	4	3.68	4.10	5.5	3.24	5.1	7.5				2
	3500	5.85	2.5	3	5.16	3.7	5.5	4.66	4.8	5.5	4.22	5.9	7.5				2
	4000	6.83	2.9	4	6.14	4.2	5.5	5.64	5.5	7.5	5.2	6.7	11	4.86	8	11	2
	4500	7.81	3.2	4	7.12	4.7	5.5	6.62	6.1	7.5	6.18	7.6	11	5.84	9	11	2
HG-80V	2000	5.94	2.30	3	5.31	3.50	5.5	4.76	4.70	5.5	4.21	5.9	7.5				4
	2300	7.05	2.70	4	6.44	4.00	5.5	5.89	5.40	7.5	5.35	6.8	11				2
	2500	7.8	2.9	4	7.19	4.4	5.5	6.65	5.9	7.5	6.11	7.3	11	5.52	8.8	11	2
	2800	8.91	3.3	4	8.31	4.9	7.5	7.78	6.6	11	7.24	8.2	11	6.66	9.9	15	2
	3000	10.9	3.6	5.5	9.06	5.4	7.5	8.53	7.1	11	8	8.9	11	7.42	10.7	15	2
	3300	10.9	4	5.5	10.2	5.9	7.5	9.67	7.9	11	9.14	9.8	15	857	11.8	15	2
	3500	11.5	4.2	5.5	10.9	6.3	7.5	10.4	8.3	11	9.9	10.4	15	9.33	12.5	15	2
	3800	12.7	4.6	5.5	12.1	6.8	11	11.6	9.1	11	11	11.3	15	10.5	13.6	18.5	2
HG-100V	2000	9.04	3.20	4	8.14	5.00	7.5	7.35	6.70	11	6.55	8.5	11				4
	2300	10.8	3.70	5.5	9.83	5.80	7.5	9.05	7.80	11	8.26	9.90	15				2
	2500	11.9	4.1	5.5	11	6.3	7.5	10.2	8.6	11	9.41	10.8	15	8.55	13	15	2
	2800	13.6	4.7	5.5	12.7	7.2	11	11.9	9.7	15	11.1	12.2	15	10.3	14.7	18.5	2
	3000	14.7	5.1	7.5	13.8	7.8	11	13	10.4	15	12.3	13.1	18.5	11.4	15.8	18.5	2
	3300	16.4	5.5	7.5	15.5	8.5	11	14.7	11.4	15	14	14.4	18.5	13.2	17.3	22	2
	3500	17.5	5.8	7.5	16.6	8.9	11	15.9	12.1	15	15.1	15.2	18.5	14.3	18.3	22	2
	3800	19.2	6.3	7.5	18.3	9.7	15	17.6	13	15	16.8	16.4	22	16	19.8	30	2
HG-125V	1450	13.4	4.10	5.5	12.1	7.00	11	11.1	9.70	15	10.1	12.4	15				4
	1750	16.6	4.90	7.5	15.5	8.10	11	14.5	11.3	15	13.4	14.5	18.5				4
	2000	19.5	5.6	7.5	18.2	9.2	11	17.2	12.9	15	16.2	16.5	22	15.1	20.2	30	4
	2300	22.7	6.4	7.5	21.6	10.6	15	20.6	14.8	18.5	19.6	18.9	22	18.5	23.1	30	2
	2600	26.1	7.2	11	24.9	12	15	23.9	16.7	22	23	21.4	30	21.9	26.2	37	2
	2800	26.3	7.8	11	27.1	12.9	15	26.2	18	22	25.2	23.1	30	24.2	28.2	37	2

Model	RPM	-100 Mbar			-200 mBar			-300 mBar			-400 mBar			-500 mBar			Number Of Motor Poles
		Qs	La	Po	Qs	La	Po	Qs	La	Po	Qs	La	Po	Qs	La	Po	
HG-150V	1450	21.7	6.30	7.5	19.9	10.6	15	18.4	14.8	18.5	16.9	19.0	22				4
	1750	27.0	7.50	11	25.3	12.6	15	23.9	17.7	22	22.4	22.7	30				4
	2000	31.4	8.5	11	29.8	14.3	18.5	28.4	20.1	30	27	25.9	30	25.5	31.8	37	4
	2300	36.8	9.7	15	35.2	16.3	22	33.9	23	30	32.5	29.7	37	31	36.4	45	2
	2600	42.1	10.8	15	40.6	18.3	22	39.3	25.9	30	38	33.4	45	36.5	40.9	55	2
	2800	45.7	11.6	15	44.2	19.7	30	42.9	27.8	37	41.7	35.9	45	40.2	44	55	2
HG-175V	1150	23.4	5.10	7.5	21.5	9.7	11	19.7	14.2	18.5	17.9	18.7	22				4
	1450	30.4	6.80	11	28.6	12.5	15	26.8	18.2	22	25.1	24.0	30				4
	1750	37.5	8.7	11	35.6	15.6	18.5	33.9	22.5	30	32.2	29.4	37	30.1	36.3	45	4
	2000	43.4	10.3	15	41.5	18.2	22	39.8	26.1	37	38.1	33.9	45	36	41.8	55	4
	2300	50.5	12.5	15	48.6	21.5	30	46.9	30.6	37	45.2	39.7	55	43	48.7	75	2
	2600	57.6	14.9	18.5	55.7	25.2	30	54	35.4	45	52.3	45.7	55	50.1	55.9	75	2
	2800	62.3	16.6	22	60.5	27.7	37	58.7	38.7	55	58.8	49.7	75	54.8	60.8	75	2
HG-200V	970	38.3	10.4	15	35.8	17.8	22	33.3	25.1	30	30.8	32.5	45				4
	1250	51.2	13.5	18.5	48.6	22.9	30	46.3	32.4	45	44.1	41.9	55				4
	1450	60.4	15.4	18.5	57.8	26.3	37	55.6	37.3	45	53.3	48.3	55	50.8	59.3	75	4
	1600	67.3	16.8	22	64.9	28.9	37	62.6	41	55	60.3	53.2	75	57.8	65.3	75	4
	1750	74.2	18.3	22	71.8	31.5	37	69.5	44.8	55	67.3	58.1	75	64.9	71.3	90	4
	1900	81.1	19.8	30	78.6	34.2	45	76.5	48.6	55	74.3	63	75	71.9	77.5	90	4
HG-250V	970	49.5	12.9	15	40.5	22.2	30	43.8	31.5	37	41.2	40.9	55				4
	1250	65.9	16.4	22	62.9	28.5	37	60.4	40.6	55	57.8	52.7	75				4
	1450	77.5	18.7	22	74.8	32.8	45	72.2	46.8	55	69.7	60.9	75	67	74.9	90	4
	1600	86.4	20.6	30	83.7	36.2	45	81.1	51.7	75	78.7	67.2	90	76	82.8	110	4
	1750	95.2	22.5	30	92.5	39.5	55	90	56.5	75	87.6	73.5	90	85	90.5	110	4
	1900	104	24.5	30	101.1	43	55	98.9	61.5	75	96.5	80.1	110	93.9	98.6	132	4

Roots Blower Unit Installation Drawing

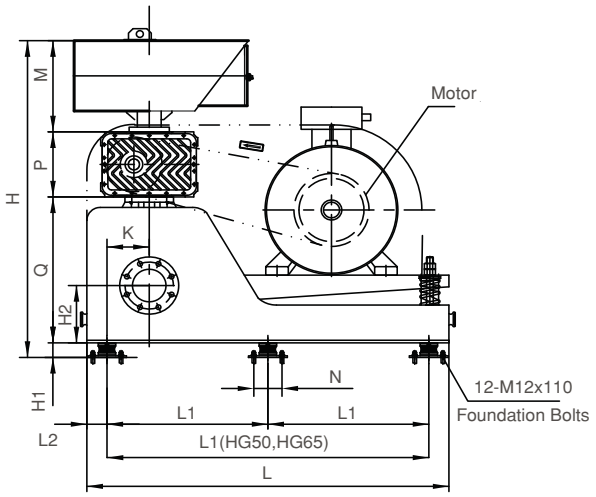

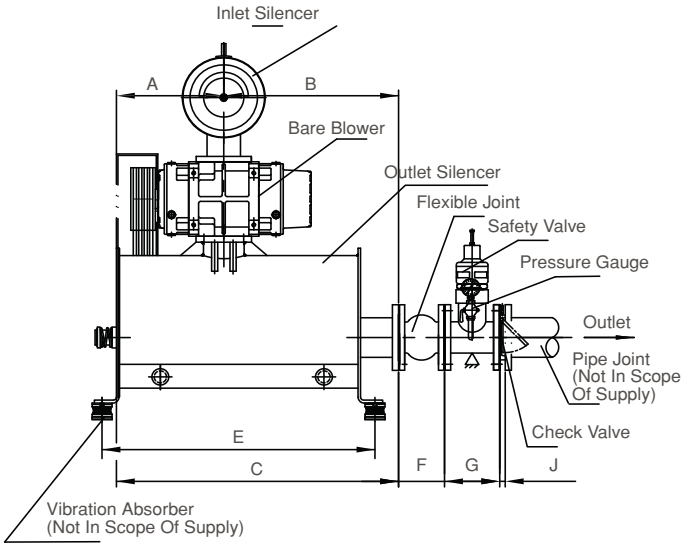

Foundation Drawing

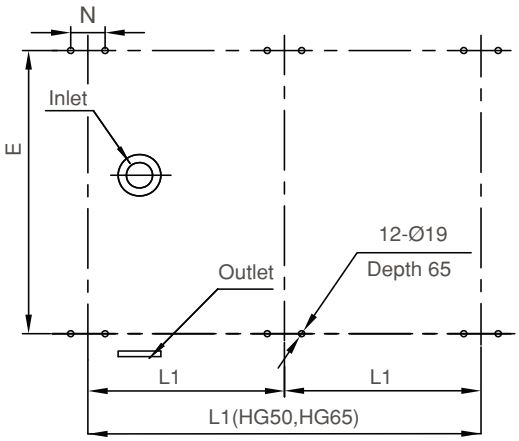

Outlet Flange

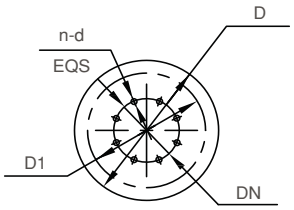

DIMENSIONS																							
Blower Model	A	B	C	E	F	G	J	H	H1	H2	K	L	L1	L2	M	N	P	Q	DN	D1	D	n	d
HG 50	300	400	700	698	105	140	18	949	56	178	90	1000	850	75	310	105	173	410	50	125	165	4	18
HG 65	300	400	700	698	115	150	18	978	56	178	90	1000	850	75	310	105	173	410	65	145	185		
HG 80	308	510	818	810	135	180	18	1216	56	220	157.5	1350	600	75	350	105	250	560	80	160	200	8	
HG 100	340	570	920	890	150	180	18	1216	56	220	157.5	1350	600	75	350	105	250	560	100	180	220		
HG 125	435	615	1050	1020	165	200	18	1750	56	290	215	1640	720	100	595	105	356	743	125	210	250		
HG 150	505	615	1120	1090	180	220	18	1762	66	290	215	1640	720	100	595	134	356	745	150	240	285		22
HG 175	578	725	1303	1220	190	250	23	1834	66	290	215	1640	720	100	647	134	376	745	200	295	340		
HG-200	620	860	1480	1445	190	250	23	2189	66	305	300	2155	950	125	683	134	505	935	200	295	340		
HG-250	720	760	1480	1445	230	300	45	2191	66	305	300	2155	950	125	683	134	505	937	250	350	395	12	

Roots Blower Unit Installation Drawing (With Acoustic Enclosure)

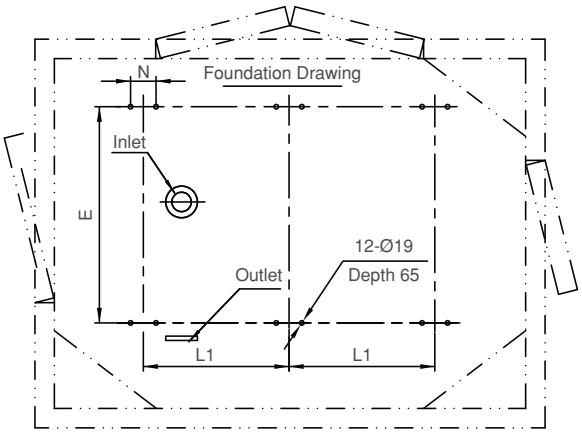

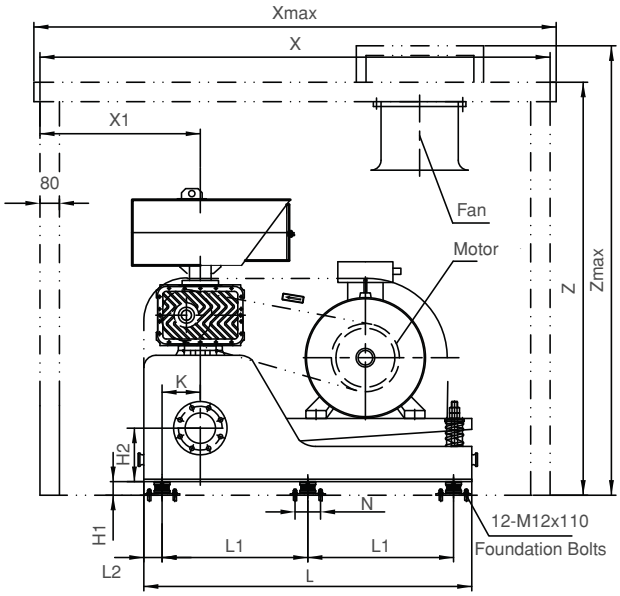

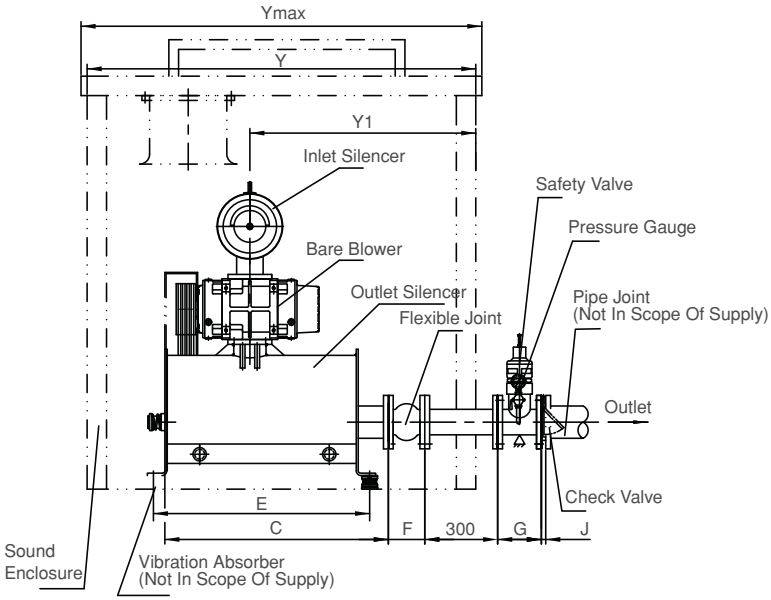

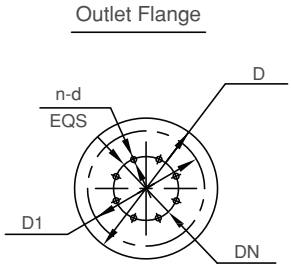

DIMENSIONS																									
Blower Model	C	E	F	G	J	H1	H2	K	L	L1	L2	N	X	X1	Xmax	Y	Y1	Ymax	Z	Zmax	DN	D1	D	n	d
HG 50	700	698	105	140	18	56	178	90	1000			105	1800	565	1850	1300	680	1350	1300	1450	50	125	165	4	18
HG 65	700	698	115	150	18	56	178	90	1000			105	1800	565	1850	1300	680	1350	1300	1450	65	145	185		
HG 80	818	810	135	180	18	56	220	157.5	1350	600	75	105	2100	660	2150	1600	870	1650	1700	1850	80	160	200	8	
HG 100	920	890	150	180	18	56	220	157.5	1350	600	75	105	2100	660	2150	1600	930	1650	1700	1850	100	180	220		
HG 125	1050	1020	165	200	18	56	290	215	1640	720	100	105	2200	650	2250	1850	980	1900	2000	2240	125	210	250		
HG 150	1120	1090	180	220	18	66	290	215	1640	720	100	134	2200	650	2250	1850	980	1900	2000	2250	150	240	285		22
HG 175	1303	1220	190	250	23	66	290	215	1640	720	100	134	2400	700	2450	2100	1100	2150	2000	2300	200	295	340		
HG-200	1480	1445	190	250	23	66	305	300	2155	950	125	134	2800	760	2850	2400	1250	2450	2600	2900	200	295	340		
HG-250	1480	1445	230	300	45	66	305	300	2155	950	125	134	2800	760	2850	2400	1250	2450	2600	2900	250	350	395	12	

EKİN ENDÜSTRİYEL

EKİN ENDÜSTRİYEL

FLOW CONTROL
UNITS

FLOW CONTROL UNITS

Truevalve Butterfly Valve

What is a Butterfly Valve?

Butterfly valves are a versatile valve type used for open/close and flow setting.. They can be used for adjusting flow setting or opening and closing of the system. Butterfly valves take up little space in the pipeline, provide perfect sealing in both directions, work with low pressure losses and can be adapted to automation easily and economically. These features have made butterfly valves one of the most preferred products in plumbing since the 1960's when they were was first designed.
Butterfly valves are used in many processes such as fire extinguishing, water and wastewater installations, power stations, compressor lines, air handling units, treatment centers. There are two types of butterfly vales: wafer and lug. For detailed information about these valve types, you can see our Butterfly Valve Types page.

Types of Butterfly Valves?

There are two types of butterfly valves: wafer and lug. Both butterfly valve types have different properties. Since each flange has its own bolts in lug type butterfly valves, it is possible to clean, inspect and repair the valve without closing the system completely. On the other hand, wafer style butterfly valves are designed to prevent back flow of the one-way flow system. They have high impermeability and protect the system against two-way pressure difference. Both valve types have their own subtypes.

Truevalve Teflon Materialed Butterfly Valve

Shaft	:	AISI416
Gasket	:	PTFE
Body Material	:	GGG40
Disc	:	PTFE
Max. Operating Temperature	:	180 °C
Max. Operating Pressure	:	16 Bar

Truevalve Wafer Type Butterfly Valve

Shaft	:	AISI416
Gasket	:	EPDM - NBR - VITON
Body Material	:	GGG40 - GG25
Disc	:	GGG40 - AISI304 - AISI316
Max. Operating Temperature	:	120 °C
Max. Operating Pressure	:	16 Bar

Truevalve Wafer Type Ptfe Sealed Butterfly Valve

Shaft	:	AISI416
Gasket	:	PTFE
Body Material	:	GGG40 - GG25
Disc	:	GGG40 - AISI304 - AISI316
Max. Operating Temperature	:	180 °C
Max. Operating Pressure	:	16 Bar

Truevalve Lug Type Butterfly Valve

Shaft	:	AISI416
Gasket	:	PTFE - NBR - EPDM
Body Material	:	GGG40 - GG25
Disc	:	GGG40 - AISI304 - AISI316
Max. Operating Temperature	:	120 °C
Max. Operating Pressurez	:	16 Bar

Truevalve Wafer Type Butterfly Valve With Gear Box

Shaft	:	AISI416
Gasket	:	PTFE - NBR - EPDM
Body Material	:	GGG40 - GG25
Disc	:	GGG40 - AISI304 - AISI316
Max. Operating Temperature	:	120 °C
Max. Operating Pressure	:	16 Bar

Lug Type Butterfly Valve With Gear Box

Shaft	:	AISI416
Gasket	:	PTFE - NBR - EPDM
Body Material	:	GGG40 - GG25
Disc	:	GGG40 - AISI304 - AISI316
Max. Operating Temperature	:	120 °C
Max. Operating Pressure	:	16 Bar

Wafer Type Butterfly Valve With Pneumatic Actuator

Shaft	:	AISI416
Gasket	:	PTFE - NBR - EPDM
Body Material	:	GGG40 - GG25
Disc	:	GGG40 - AISI304 - AISI316
Max. Operating Temperature	:	120 °C
Max. Operating Pressure	:	16 Bar

Lug Type Butterfly Valve With Pneumatic Actuator

Shaft	:	AISI416
Gasket	:	PTFE - NBR - EPDM
Body Material	:	GGG40 - GG25
Disc	:	GGG40 - AISI304 - AISI316
Max. Operating Temperature	:	120 °C
Max. Operating Pressure	:	16 Bar

Wafer Type Butterfly Valve With Electrical Actuator

Shaft	:	AISI416
Gasket	:	PTFE - NBR - EPDM
Body Material	:	GGG40 - GG25
Disc	:	GGG40 - AISI304 - AISI316
Max. Operating Temperature	:	120 °C
Max. Operating Pressure	:	16 Bar
Actuator	:	220V - 24DC

Lug Type Butterfly Valve With Electrical Actuator

Shaft	:	AISI416
Gasket	:	PTFE - NBR - EPDM
Body Material	:	GGG40 - GG25
Disc	:	GGG40 - AISI304 - AISI316
Max. Operating Temperature	:	120 °C
Max. Operating Pressure	:	16 Bar
Actuator	:	220V - 24DC

Truevalve Double Flange Butterfly Valve

Shaft	:	AISI416
Gasket	:	PTFE - NBR - EPDM
Body Material	:	GGG40
Disc	:	GGG40 –Stainless
Max. Operating Temperature	:	120 °C
Max. Operating Pressure	:	16 Bar

Butterfly Valve of Usages Areas

Ball valves are a type of metal valve used in many industries with their light weight, easy handling, small footprint as well as low pressure loss and good sealing properties.

Ball valves, which we are accustomed to see, especially in drinking water installations and natural gas installations in buildings, are often used in the following areas as well as these most common areas.

- Fire Extinguishing Installation
- Water and Waste Water
- Energy Stations
- Compressor Lines
- Air Handling Units
- Treatment Centers
- Heating-Cooling Lines
- Chemical and Petrochemical Facilities
- Shipbuilding Industry
- Food Industry
- Gas and Exhaust Lines
- Paper Industry

Truevalve Ball Valve

What is a Ball Valve?

Ball valves take their name from the perforated and rotating sphere inside them. Basically, this perforated sphere is rotated at 90-degree angles by the handle on the valve and by doing so, the flow through the system is controlled. As the valve handle is aligned with the flow, the hole of the sphere is also in line with the flow and the fluid is free to flow. When the handle is turned 90 degrees so that it is perpendicular to the valve, the system shuts down and the flow is interrupted. Ball valves are preferred primarily in places that open and close very quickly or need to be opened and closed quickly. Ball valves are one of the most preferred types of metal valves due to their good sealing properties, low pressure loss, easy open/ close and small footprint in the pipeline.

Ball Valve Features

- Low pressure losses
- Easy to open/close
- Good sealing
- Lightweight
- Small footprint

Types of Ball Valves

There are sub-types of ball valve suitable for different needs. For example, the natural gas ball valve used in natural gas installation must be produced in accordance with EN 331 European standards. Some other types of ball valves include flanged ball valves used in systems where sealing is a priority, or butterfly valves with butterfly arms used in tight spaces where the normal arm cannot rotate.

The main types of ball valves can be listed as follows..

- Threaded ball valve
- Flanged ball valve
- Ball valves with butterfly handles
- Mini ball valve
- Natural gas ball valve

Two Pieces Threaded Stainless Steel Ball Valve

Gasket	:	PTFE
Body Material	:	AISI304 - AISI316
Max. Operating Temperature	:	180 °C
Max. Operating Pressure	:	63 Bar

Three Pieces Threaded Stainless Steel Ball Valve

Gasket	:	PTFE
Body Material	:	AISI304
Max. Operating Temperature	:	180 °C
Max. Operating Pressure	:	25 Bar

Two Pieces Threaded Stainless Steel Ball Valve

Gasket : PTFE
Body Material : AISI304 - AISI316
Max. Operating Temperature : 180 °C
Max. Operating Pressure : 16 Bar
Connection : ISO5211

Stainless Flanged Three Piece Ball Valve

Gasket : PTFE
Body Material : AISI304 - AISI316
Max. Operating Temperature : 180 °C
Max. Operating Pressure : 16 Bar
Connection : ISO5211

Cast Body Ball Valve

Gasket : PTFE
Body Material : Cast iron
Max. Operating Temperature : 150 °C
Max. Operating Pressure : 10 Bar
Connection : Flange

Cast Body Ball Valve

Gasket : PTFE
Body Material : Cast iron
Max. Operating Temperature : 150 °C
Max. Operating Pressure : 16 Bar
Connection : Flange

Electric Actuator Flanged Ball

Gasket : PTFE
Body Material : Stainless
Max. Operating Temperature : 180 °C
Max. Operating Pressure : 16 Bar
Connection : Flange

Threaded Ball Valve With Electrical Actuator

Gasket : PTFE
Body Material : Stainless
Max. Operating Temperature : 180 °C
Max. Operating Pressure : 16 Bar
Connection : Flange

Flanged Ball Valve With Pneumatic Actuator

Gasket : PTFE
Body Material : Stainless
Max. Operating Temperature : 180 °C
Max. Operating Pressure : 16 Bar
Connection : Flange

Threaded Ball Valve With Pneumatic Actuator

Gasket	:	PTFE
Body Material	:	Stainless
Max. Operating Temperature	:	180 °C
Max. Operating Pressure	:	16 Bar
Connection	:	Flange

Ball Valve Usage Areas

Ball valves are a type of metal valve used in many sectors with their lightness, ease of use, small footprint, low pressure loss and good sealing properties. Ball valves, which we are accustomed to seeing especially in drinking water installations and natural gas installations in buildings, are frequently used in the following areas besides these most aforementioned areas.

- Heating-Cooling Lines
- Chemistry Industry
- Food Processing Facilities
- Natural Gas Lines
- Paper Mills
- Ship Construction

Knife Gate Valve

What is a Knife Gate Valve?

Knife Gate Valves are developed for mud and abrasive applications. They are especially used in fluids containing abrasive particles. These valves are bladed valves because they cut the fluid passage with a blade (slide) perpendicular to the flow. This blade works by closing and opening vertically between two sealing rings. It is preferred to work fully open or fully closed. They are not suitable for precise flow control.
Knife gate valves are suitable for use in multi-fiber fluids, for example in the paper industry and waste water lines. They provide full sealing with their one-piece body and elastomer (EPDM, NBR, NR) site. They can also be produced in metal style according to their fluid properties. They can be flywheel, gearbox, chain wheel, pneumatic actuator and electric actuator.

Truevalve Knife Gate Valves

Body Material	:	GGG40 Ductile Iron - Stainless
Knife	:	AISI304 Stainless
Max Operating Temperature	:	200 °C
Pressure Class	:	Manual – Piston

Knife Gate Valve Fields of Application

Knife gate valves are used in systems that do not require precise flow control in systems with solid materials such as mud, sediment and fiber. The blade (slider) that moves perpendicular to the flow direction is not affected by the solid substances contained in these fluids that may restrict movement, like butterfly valves. Therefore, it is a preferred valve type in impure fluids.
The main usage areas are as follows.

- Fibrous fluids
- Wastewater
- Hot water
- Cold water
- Non-Acid and non-alkaline fluids

Truevalve Compensators

What is a Compensator?

Expansion joints absorb the expansion, contraction and vibrations that occur in the pipe systems and ensure the flexible and uninterrupted operation of the system. Compensator bellows have a lifetime of 5000 cycles if worked within the allowed amount of movement.

Compensator Types

It differs according to usage areas and fluids. The most known types of installations are as follows.

- Metal Bellows
- Rubber
- Teflon
- Limit Rods
- Articulated Shaft (Cardan Shaft)

Axial Type Expansion Jointss

Bellows	:	304 Stainless Steel
Shim	:	304 Stainless Steel
Flange	:	Carbon Steel
Pressure	:	40 Bar

External Pressure Compensators

Bellows	:	304 Stainless Steel
Flange	:	Carbon Steel
Pressure	:	16 Bar

Compensator Usage Areas

The usage areas of the compensators are very wide. It is widely used in the thermal pressure vessels, piping and transportation industries. Compensators are produced to absorb various movements in pipes carrying all kinds of substances in all diameters, at all pressures and temperatures. These movements can be summarized as follows.

- Axial Movements.
- Lateral Movements.
- Angular Movements.
- Combined Movements related to those listed above.
- Vibrations Created by System Dynamics.

Truevalve Pneumatic Piston Valve

What is Pneumatic Piston Valve?

Pneumatic piston valves are valves that allow the piston to cut off or open the flow with linear motion by moving away from the seating surface with the air power supplied to the actuator. As long as no air is supplied to the actuator, the pneumatic piston valve remains in the closed position with the power of the spring and ensures that the fluid does not pass. It has good sealing and long lifetime.
It is available in threaded, flanged and weld-neck variants as connection options.

Pneumatic Piston Valve Variants

Pneumatic Piston Flanged Valve

Shell	:	316 Stainless Steel
Piston	:	304 Stainless Steel
Max. Operating Temperature	:	220 °C
Supply Pressure	:	4-7 Bar

Threaded Piston Valve

Shell	:	316 Stainless Steel
Piston	:	304 Stainless Steel
Max. Operating Temperature	:	220 °C
Supply Pressure	:	4-7 Bar

Pneumatic Piston Valve Usage Areas

It is used in many areas thanks to its ease of maintenance, fast opening and closing, low pressure loss, high allowed flow rate and resistance to impact.
The main ones are;

- In the Food
- Textile
- Machinery
- Chemistry
- Iron and Steel
- Cement
- Pharmaceutical
- Cosmetic
- Petrol
- Gas Lines
- Chemical Material
- Steam
- Air
- Water

Truevalve Selenoid Valve

What is a Solenoid Valve?

The solenoid valve is an electromechanical valve used to control the flow of liquids and gases. By supplying electrical energy (220V, 110V, 24V, 12V, 6V etc. AC, DC voltage) to the coil on the solenoid valve, the position of the valve is changed. Solenoid valves are designed to shut down the system when needed. Therefore, it can be used in any desired system.

Truevalve Selenoid Valve

Shell	:	Brass – Stainless
Piston	:	NBR
Max. Operating Temperature	:	-10 + 80 °C
Supply Pressure	:	4-7 Bar

Solenoid Valve Usage Areas

- Air
- Water
- Gas
- It is preferred to put a filter in front of it when used with contaminated fluids.

Truevalve Actuators

What is an Actuator?

The actuator is an operator mechanism that provides automation of the valve's opening/closing process. It is mounted on the valve and connected to the valve shell. There are different types of actuators and these types have different uses. Power actuated actuators are basically divided into three.
Electric Actuator: Uses the electric motor to open and close the valve.
Pneumatic Actuator: Uses pneumatic systems powered by compressed air to open and close the valve.
Hydraulic Actuator: Uses hydraulic systems powered by pressurized fluid to open and close the valve.

What all three types have in common is that they make the valves work faster than manual operation. They are frequently used, especially in large valves. All actuators are actuated by electrical energy. Actuators allow intermediate positions in addition to opening and closing the valve. With the limit switch boxes, i/p converters and positioners mounted on these actuators, the open/closed position of the valve can be monitored, and the position information can be transmitted to the automation system.

Truevalve Electric Actuator

Method of Operation : 220V AC - 24V DC - 4/20mA (Proportional)
Protection Grade : IP 67
Shell : Aluminum Injection

Truevalve Pneumatic Actuator

Method of Operation : Double Acting Pneumatic Actuator/Single Acting Pneumatic
Protection Grade : IP 67
Shell : Aluminum Extrusion

Electric Actuator

Electric actuators use an electric motor to open and close the valve. The driving force obtained by the electric motor provides the circular movement of the gears inside the shell. Since the gear system is used, a constant torque is provided from the beginning to the end of the on/off process. Electric actuators, which can be used with many different valves such as butterfly and ball valves, perform valve on-off operation more slowly than pneumatic and hydraulic actuators due to the gear systems inside.

Advantages of Electric Actuators

- The availability of electricity everywhere.
- Their longevity.
- More compact and lighter.
- Allows for precise control.
- Wide operating voltage range.
- Large maximum rotational angle tolerance.
- Quiet operation.

Pneumatic Actuators

Pneumatic actuators are actuators powered by compressed air. Pneumatic actuators are preferred in most applications due to their lightweight and durable construction. The advantages are that they are cost-effective and reliable, can be used in explosive atmospheres, and can be used as a fail-safe actuator.

Single-acting pneumatic actuator is produced as a model that opens/closes with spring force. Therefore the actuator is in the open or closed position as long as it is not operated. When these actuators are operated in open or closed position the position reverses. It is the spring inside that allows it to return to its original state.

Since pneumatic actuators work with a compressor, the installation cost is slightly higher, but the operating cost is low as they use air as a raw material. They are noisier than electric actuators.

Types of Pneumatic Actuators

- Diaphragm Type
- Piston - Cylinder Type

Valve Types Compatible With Pneumatic Actuators

- Linear
  - o Gate
  - o Diaphragm
- Rotary
  - o Globe
  - o Butterfly
  - o Plug

Truevalve Plastic Valve

What is Plastic Valve?

Plastic valves are valves with high chemical resistance and are used to direct almost all kinds of fluids. Thanks to their high durability, plastic valves are often preferred especially in systems containing corrosive fluids. In addition, they are long-lasting due to their high impermeability.

Another feature of plastic valves taken advantage of in acid and chemical transfer lines, especially in the chemical industry, food industry, natural gas lines, ship constructions, paper mills and heating-cooling lines, is that their pressure losses are very low.

The type of plastic used in the construction of the plastic valves, which offer ease of use with their easy operation, lightness and small footprint, can be PVC-U, PVC-C, PP-H or PVDF.

Plastic Valve Types

Plastic valves are generally divided into two as manual and actuated. Both valve types have their own sub-types.

Manual Plastic Valves

Manual plastic valves are manually controlled valves. Since plastic valves are easily operated, they are relatively easier to use in their manual versions compared to other valves.

Manual Plastic Valve Types

- 2 Way Ball Valve
- 3 Way Ball Valve
- Butterfly Valve
- Diaphragm Valve
- Check Valve
- Pressure Control Valve
- Auxiliary Valve

Actuated Plastic Valves

Actuated plastic valves are plastic valves that open and close depending on an operator system. Actuated versions are generally preferred as manual handling will be difficult for large valves. In addition, actuated plastic valves are used in systems where the valve must be opened and closed quickly.

Types of Actuated Plastic Valves

- Globe Valve
- Butterfly Valve
- Diaphragm Valve
- Solenoid Valve

Plastic Valves Materials

Plastic valves, which offer ease of use with their easy opening and closing, light weight and small footprint, can be produced from different types of plastic.

Plastic Valve Material Types

- PVC-U
- PVC-C
- PP-H
- PVDF

Each of the types of plastic listed above has its own characteristics. For example, PVC-U is resistant to temperatures between 0-60 °C, while PVC-C can be used up to 90 °C. Or, while PVDF is resistant to acidic fluids, it is a material with low resistance to basic fluids above 11 pH. PP-H, on the other hand, is resistant to organic solvents, degreasers and generally corrosive environments. The type of plastic valve to be used in fluid routing is completely determined by the pH value of the fluid, its corrosive properties and operating temperature.

Plastic Valve Usage Areas

Plastic valves are frequently used in many sectors with their easy opening and closing, their lightness, small footprint and high resistance to corrosive fluids. In addition, the fact that it has both manual and actuated options and that different types of plastic valves can be produced suitable for different fluids expands the usage areas of plastic valves. Although not limited to these, the main sectors in which plastic valves are used are as follows.

- Natural Gas Lines
- Heating-Cooling Lines
- Chemistry Industry
- Food Facilities
- Paper Mills
- Ship Construction

Truevalve Globe Valve

What is a Globe Valve?

Globe valve is the most commonly used valve type in installations all over the world. Like all frequently preferred products, the technology of these valves is developing rapidly. They are durable, long-lived, suitable for frequent open closure.
Offering precise flow control, globe valves are suitable for use at high pressure and temperature. The most important reason for these valves to be preferred frequently is their impermeability at three different points. These valves, which owe the circuit sealing to the system that is closed by the rotating of the valve flywheel, provide the outer sealing with two different solutions. It ensures the sealing between the body and the cover with a seal, and the sealing from the drive shaft to the outer environment with the packing rings.

Truevalve Globe Valves

Shaft	:	AISI304 - AISI 316
Body Material	:	GG25 - GGG40
Cap Material	:	GG25 - GGG40
Flywheel	:	GG20
Max. Operating Temperature	:	-10 °C / 220 °C
Pressure Class	:	PN16

Truevalve Metal Bellow Sealed Globe Valves

Shaft	:	AISI304 - AISI 316
Body Material	:	GG25 - GGG40
Cap Material	:	GG25 - GGG40
Flywheel	:	GG20
Max. Operating Temperature	:	-10 °C / 220 °C
Pressure Class	:	PN16 - PN25 - PN40

Types of Globe Valves

Glob valve, which is the most frequently used valve type in installations all over the world, has three different types in terms of sealing methods.

Printed Globe Vans

Sealing system in pressure-type valves is made by closing the valve, which is a metal closing element, by sitting on a metal disc. So the sealing system is in the form of metal-metal.

Metal Bellow Sealed Globe Valves

Shaft sealing systems of these valves are developed with stainless steel bellows. Sealing of the shaft bearing is supported by the bowl-bellows-shaft system installed between the cover and the body. In addition, as a temporary solution against leakage risk as a result of problems that may occur in the bellows, there is a packing group.

Piston Type Globe Valve

Sealing system of piston type globe valves is metal to elastic. These valves have two ring-shaped elastic rings and a piston that enters them. This piston acts as a closing element. The pressure from the cap nuts wraps the piston in the rings with radial pressure. Sealing is provided by this pressure. Unlike other globe valves, the sediment and dirt that may form in the circuit are also cleaned thanks to the piston's closing style.

Globe Valves Fields of Application

Globe valves, which are resistant to high pressure and high temperatures, provide precise flow control as well as these features. The main headings in which globe valves, which have higher pressure losses than other valves, are used in fluid control are as follows.

Fields of Application

- Hot and cold-water processes
- Hot oil processes
- Steam processes
- Compressed air processes
- Cooling water systems
- Fuel oil systems
- Feed water or chemical feeding systems
- Boiler and main steam outlets and sewer channels
- Turbine lubrication system and others

Truevalve A Chek Valve

What is A Check Valve?

Check valves are safety armatures that prevent fluid from returning in fluid transfer systems. There are many types of check valves to choose from, based on system requirements and other criteria. The main factors to consider when choosing check valves are pressure loss, closing feature and costs.
Check valves are valves that allow one-way flow of fluid. These valves provide this with ball, spring, or conical structures inside them. They are used in different systems for different reasons. In systems such as LPG motor vehicles, where return flow will adversely affect the operation of the system, the check valve ensures system stabilization and prevents the loss of pressure in hydraulic systems as a result of the returning fluid.

Types of Check Valves

There are different types of check valves have different uses in different systems depending on the process and the fluid used. Most common types of check valves are as follows.

- Disc check valve
- Swing check valve
- Ball check valve
- Wafer type check valve
- Toilet check valve
- Lift type spring check valve
- Double throttle check valve

Truevalve Stainless Steel Disc Check Valve

Body Material	:	AISI304
Disc	:	AISI304
Max. Operating Temperature	:	200 °C
Max. Operating Pressure	:	40 Bar

Truevalve Stainless Steel Swing Check Valve

Body Material	:	AISI304
Max. Operating Temperature	:	-20 °C / 180 °C
Max. Operating Pressure	:	PN16

Truevalve Dual Check Valve

Gasket	:	EPDM
Body Material	:	GG25
Disc	:	GGG40 - AISI304
Max. Operating Temperature	:	120 °C

Truevalve Swing Type Cast Steel Check Valve

Body Material	:	Cast iron
Max. Operating Temperature	:	120 °C
Max. Operating Pressure	:	16 Bar

Truevalve Strainer Valve

What is Strainer Valve?

Strainer valves are plumbing equipment that filters foreign matter in the pipelines. Strainers have a wide range of uses and are indispensable for the health and safety of the system they are used. These valves ensure a healthy and long-lasting operation of many equipment such as pumps, water meters and control valves. These valves can be easily cleaned without disassembling and are very easy to maintain.

Types of Strainer Valves

Strainers, which are indispensable equipment for system health, are suitable to different types oof fluids. Types of strainers with different properties are as follows.

- Y Type Flanged Strainer
- Brass Threaded Strainer
- Stainless Steel Threaded Type Strainer
- T type flanged strainer
- Mud type strainer

Truevalve Flanged Strainer Valves

Body Material	:	Cast iron
Gasket	:	Klingrite
Max. Operating Temperature	:	180 °C
Max. Operating Pressure	:	16 Bar

Truevalve Y-Type Stainless Steel Strainers

Body Material	:	AISI304
Max. Operating Temperature	:	-20 °C / 180 °C
Pressure Class	:	PN16

Strainer Valve Fields of Application

Strainers are used in almost all processes, as they ensure the smooth operation of fluid transfer systems. The main fields of application are as follows.

- Central heating
- Petrochemical plants
- Food facilities
- Paper factories
- Tobacco factories
- Iron and steel factories
- Chemical industry
- Energy production

Gate Valve

What is Gate Valve?

Gate valves are also known as sliding valves. Gate valves control the flow of fluid by sliding a disc perpendicular to the flow direction of the fluid located between two sealing rings.They may be closed by a flat surface, disc or slider to cut off the flow. The slider of these valves can be made of a single piece, or more. Gate valves can operate as fully open or fully closed, and this may preferable in workflows that can take advantage of this.

Truevalve Gate Valve

Shell	:	Cast iron
Cover	:	Cast iron
Disc	:	Rubber Coated Casting
Max. Operating Temperature	:	120 °C

Gate Valve Usage Areas

In systems with sensitive flow rates, their usage is not a matter of preference. Gate valves are mostly used to regulate and control the flow of fluids such as water, hot water, superheated water, compressed air, fuel oil and chemical fluids.

- Textile Industry
- Energy Production Facilities
- Refineries
- Petrochemical Plants
- Paper Mills
- Food Factories
- Ship Construction

EKİN ENDÜSTRİYEL

BOILERS

ENERGY SYSTEMS

Water Cooled Grating

In manual-loaded central system hot water boilers produced with MIT brand, Ekin Endüstriyel patented "Water Cooled Grating System" is used. In standard boilers in which cast gratings are used, cracking or melting problems may also occur due to excessive heat. These problems constitute change and refurbishment costs for the end user. Thanks to our Water Cooled Grating design, this extra cost is avoided and also boiler efficiency increases due to extra heat transfer surface, fuel cost is lowered.

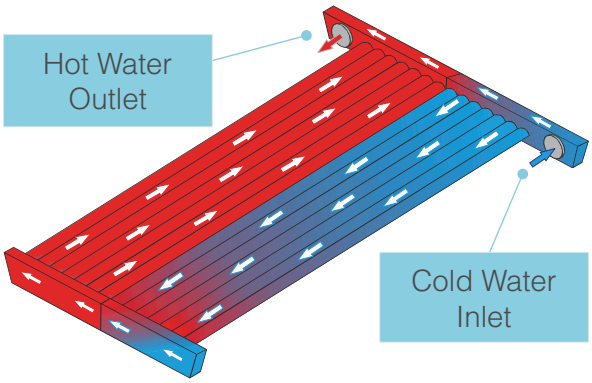

Window Type Flame Breaker (Turbulator)

Thanks to window-type turbulators (flame breaker) found in second pass pipes, combustion efficiency increases and fuel consumption decreases.

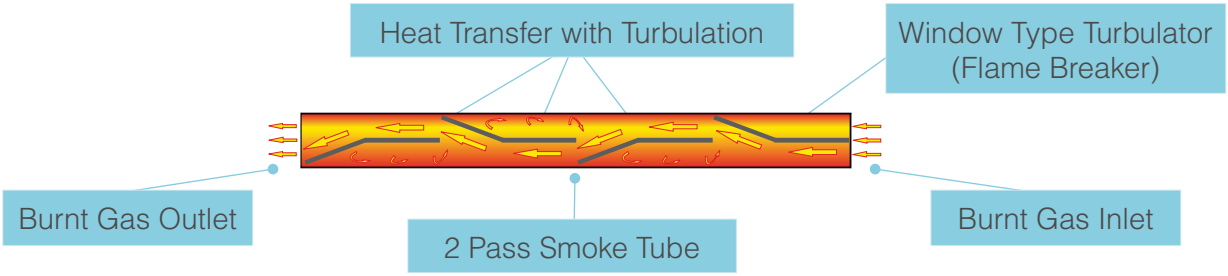

Water Cooled Cover

In all solid, liquid and gas-fueled central system hot water boilers produced under the brand name MIT, water cooled cover system is used. Thanks to Ekin Endüstriyel patented "Water Cooled Cover System, this device allows longer life than covers with refractory material, and fault and service costs are eliminated before occurring. Besides, since heat losses occurring on front cover are transferred to installation water as energy within the system, fuel consumption costs are reduced.

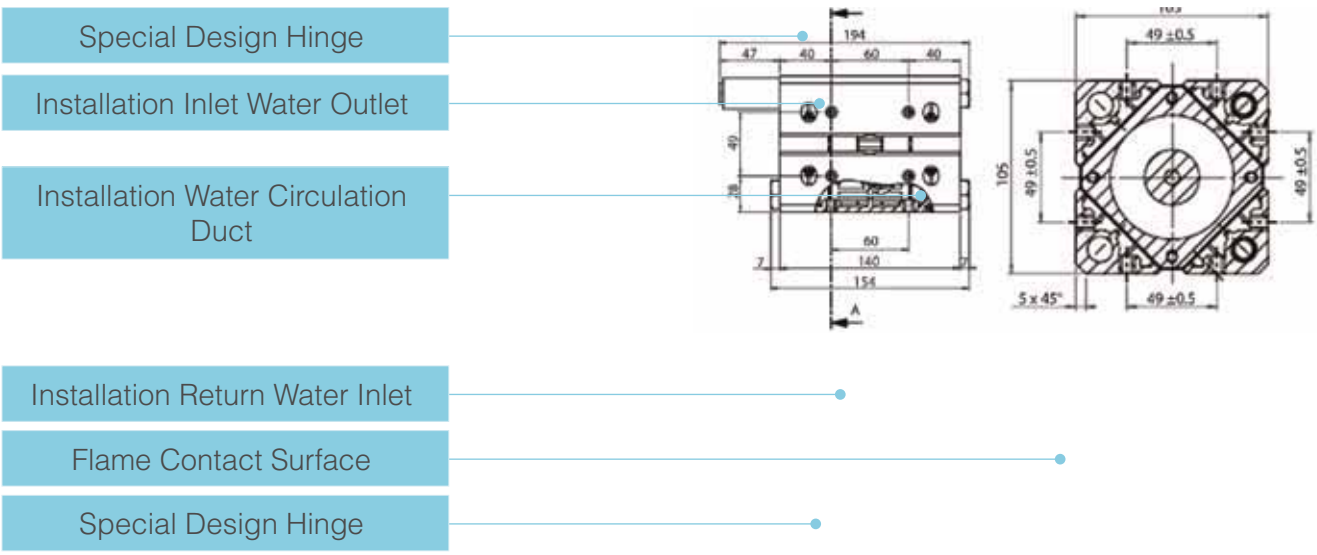

Standard Control Panel

Digital control panel provided on all solid fueled boilers as a standard to our customers;

- Adjusting installation water to desired temperature.
- Heat tracking with digital display.
- Adjusting installation water temperature according to exterior ambient temperature.
- Protection against excessive heatings thanks to safety thermostat.
- Preventing unnecessary electricity consumption by controlling circulation pump as per installation water temperature are all provided.

Solid Fueled Three-Pass Automatic Loaded (Stoker) Hot Water Boiler

TKOS Series; Three pass, solid fueled, automatic loading (stoker) steel hot water boilers, are specially designed for central heating systems with their long service life with low operating costs. While fuel loading is performed via automatic fuel loading system in TKOS model boilers, burning continues above via spiral. Thanks to special design of spiral loading system, passage of smoke from spiral pipe to bunker is prevented, and an efficient burning is provided.

Features

- High combustion efficiency up to 85%.
- Window type flame crushers in smoke pipes (turbulators).
- Low gas emission values with eco-friendly design.
- Protection against all kinds of outer effect with steel construction in prismatic structure.
- Coating with electrostatic power paint on galvanized sheet.
- Water cooled cover system.
- Standard operating pressure 4 bars.
- Production amount up to 8 bar.
- Full cylindrical boiler review.
- State-of-the-art manufacturing techniques.
- Pipe bundle between passes excluding three pass burning room.
- Use of 3.1 certificated boiler tube compatible with 10217-2 norm.
- Mobile and removable bunker towards protection against coal jamming.
- Extensive service network.
- Compliance with national and International norms.

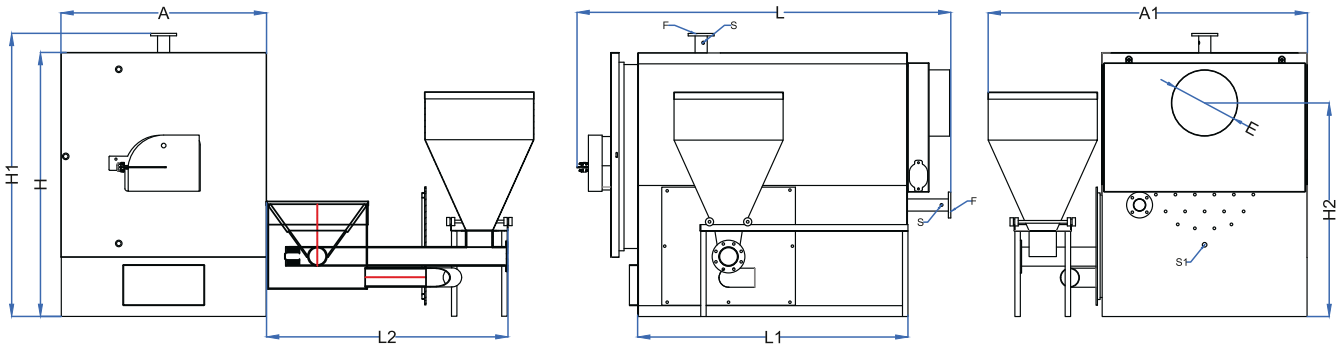

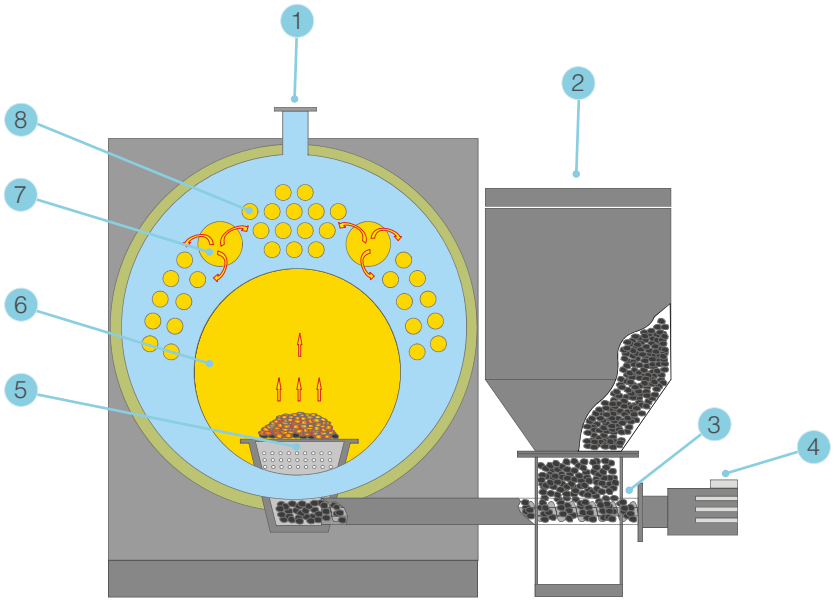

1	Installation Putlet Flange
2	Bunker
3	Helical Shaft
4	Reducer
5	Pot
6	Burning Room (1st Pass)
7	Smoke Pipe (2nd Pass)
8	Smoke Pipe (3rd Pass)

TKOS TECHNICAL SPECIFICATIONS								
Model			TKOS 175	TKOS 200	TKOS 250	TKOS 300	TKOS 350	TKOS 400
Capacity		kcal/h	175.000	200.000	250.000	300.000	350.000	400.000
		kW	203	232	290	348	406	464
Width	A	mm	1150	1150	1347	1347	1347	1500
Width	A1	mm	1780	1780	2180	2180	2180	2340
Height	H	mm	1410	1410	1600	1600	1600	1935
Height	H1	mm	1574	1574	1760	1760	1760	2075
Length	L	mm	1901	2101	2178	2178	2424	2481
Foot Length	L1	mm	1187	1387	1489	1489	1739	1732
Bunker Exit Distance	L2	mm	1340	1340	1612	1612	1612	1770
Chimney Diameter	E	mm	250	250	300	300	300	500
Chimney Height	H2	mm	1130	1130	1340	1340	1340	1565
Hot Water Trip (PN 16)	F	DN	65	65	65	65	80	80
Water Volume		lt	450	605	786	720	852	1074
Anhydrous Weight		kg	1495	1600	2300	2475	2645	3165
Safety Trip	S	inch	1 1/4”	1 1/4”	1 1/4”	1 1/4”	1 1/4”	1 1/4”
Filling/Discharging	S1	inch	1/2”	1/2”	1/2”	1”	1”	1”
Bunker Capacity		lt	275	275	400	400	400	400
Fan Model			ERF 3	ERF 3	ERF 3	ERF 3	ERF 4	ERF 4
Fan Flow		m^3	1600	1600	1600	1600	1900	1900
Gearhead Power		kW	0.75	1.1	1.1	1.1	1.1	1.1
Fan and Reducer Operating Voltage		V	380	380	380	380	380	380
Operational Pressure		bar	4	4	4	4	4	4

TKOS TECHNICAL SPECIFICATIONS							
Model			TKOS 450	TKOS 500	TKOS 600	TKOS 700	TKOS 800
Capacity		kcal/h	450.000	500.000	600.000	700.000	800.000
		kW	522	580	696	812	928
Width	A	mm	1500	1500	1780	1780	1780
Width	A1	mm	2340	2340	2600	2600	2600
Height	H	mm	1935	1935	2207	2207	2207
Height	H1	mm	2075	2075	2385	2385	2385
Length	L	mm	2481	2731	2716	2888	3060
Foot Length	L1	mm	1732	1982	1984	1984	2314
Bunker Exit Distance	L2	mm	1770	1770	1955	1955	1955
Chimney Diameter	E	mm	500	500	580	580	580
Chimney Height	H2	mm	1565	1565	1740	1740	1740
Hot Water Trip (PN 16)	F	DN	100	100	125	125	125
Water Volume		lt	1030	1172	1404	1638	1872
Anhydrous Weight		kg	3220	3565	4370	4830	5375
Safety Trip	S	inch	1 1/4”	1 1/4”	1 1/4”	1 1/4”	1 1/4”
Filling/Discharging	S1	inch	1”	1”	1”	1”	1”
Bunker Capacity		lt	400	400	1100	1100	1100
Fan Model			ERF 4	ERF 4	ERF 4	ERF 4	ERF 4
Fan Flow		m^3	1900	1900	2500	2500	3500
Gearhead Power		kW	2.2	2.2	2.2	2.2	2.2
Fan and Reducer Operating Voltage		V	380	380	380	380	380
Operational Pressure		bar	4	4	4	4	4

TKM Series

Solid Fuel Fired Three-Pass Manual Loaded Hot Water Boiler

TKM Series; Fueled manual loaded hot water boilers are manufactured with three-pass. It allows maximum heat transfer and fuel saving by distributing the heat equally obtained through its three-pass design. Combustion air is provided with thermostatically controlled fan. Air obtained from fan located at the rear of boiler is transferred to combustion chamber uniformly. Flame within the burning chamber is transferred to the front side with secondary flow pipes. These hot gases coming to preliminary smoke box are transferred to back smoke box and transferred to chimney from here.

Features

- High combustion efficiency up to 85%.
- Window type flame crushers in smoke pipes (turbulator).
- Low gas emission values with eco-friendly design.
- Protection against all kinds of outer effect with steel construction in prismatic structure.
- Coating with electrostatic power paint on galvanized sheet.
- Water cooled cover system.
- Water cooled grating system.
- Standard operating pressure 4 bars.
- Production amount up to 8 bar.
- Full cylindrical boiler body.
- State-of-the-art manufacturing techniques.
- Pipe bundle between passes excluding three pass burning room.
- Use of 3.1 certificated boiler tube compatible with 10217-2 norm.
- Common service network.
- Compliance with national and International norms.

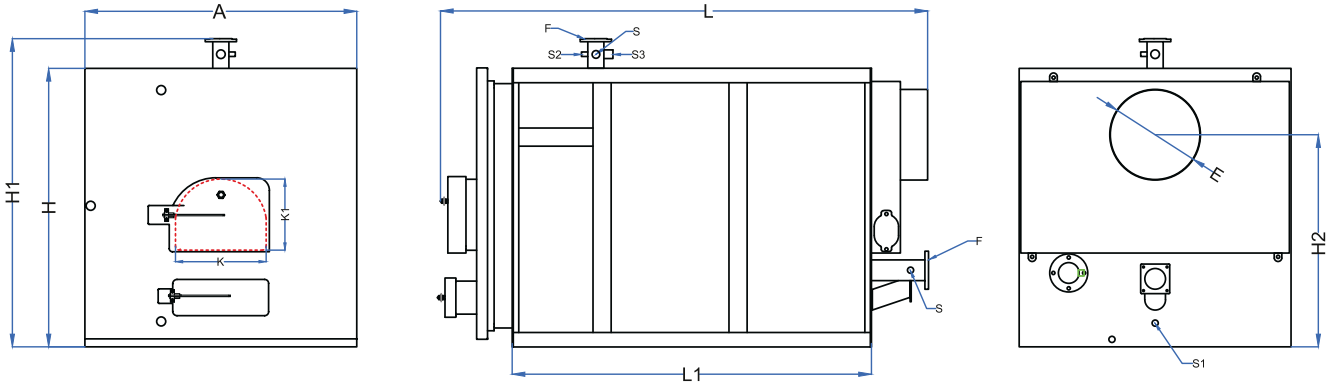

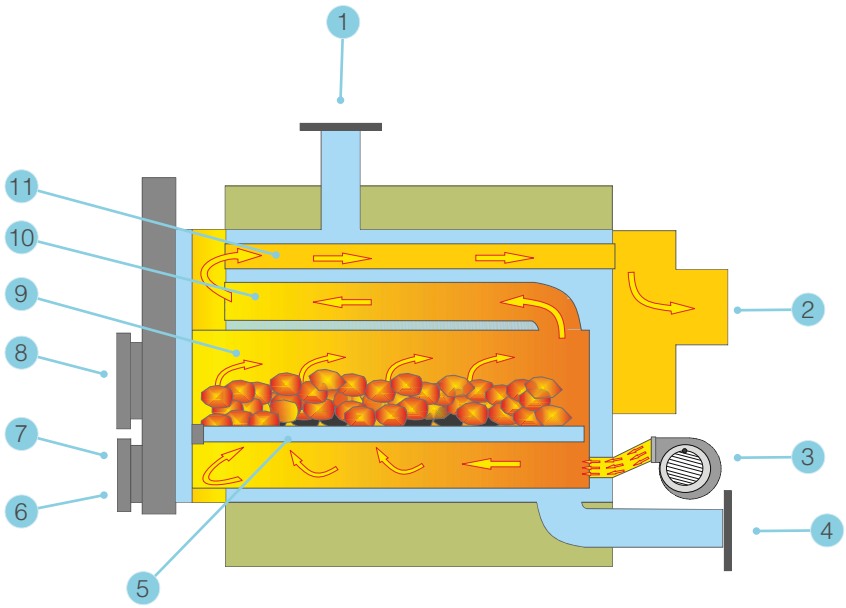

1	Installation Putlet Flange
2	Chimney Outlet
3	Fan
4	Installation Return Flange
5	Water Cooled Grate
6	Water Cooled Cover
7	Ash Cover
8	Feeding Cover
9	Burning Room (1st Pass)
10	Smoke Pipe (2nd Pass)
11	Smoke Pipe (3rd Pass)

TKM TECHNICAL SPECIFICATIONS										
Model			TKM 80	TKM 100	TKM 125	TKM 150	TKM 175	TKM 200	TKM 250	TKM 300
Capacity		kcal/h	80.000	100.000	125.000	150.000	175.000	200.000	250.000	300.000
		kW	93	116	145	174	203	232	290	348
Width	A	mm	1040	1040	1040	1150	1150	1150	1347	1347
Height	H	mm	1090	1090	1090	1090	1190	1190	1398	1398
Height	H1	mm	1267	1267	1267	1367	1367	1367	1574	1574
Length	L	mm	1467	1667	1667	1873	1873	2073	2178	2178
Foot Length	L1	mm	787	987	987	1187	1187	1387	1484	1484
Chimney Diameter	E	mm	250	250	250	250	250	250	300	300
Chimney Height	H2	mm	844	844	844	951	951	951	1146	1146
Hot Water Trip (PN16)	F	DN	65	65	65	65	65	65	65	65
Water Volume		lt	268	331	310	510	489	638	786	720
Anhydrous Weight		kg	795	875	920	1125	1180	1350	1660	1805
Safety Trip	S	inch	1 1/4”	1 1/4”	1 1/4”	1 1/4”	1 1/4”	1 1/4”	1 1/4”	1 1/4”
Filling/Discharging	S1	inch	1/2”	1/2”	1/2”	1/2”	1/2”	1/2”	1/2”	1”
Indicator Sleeve	S2	inch	1/2”	1/2”	1/2”	1/2”	1/2”	1/2”	1/2”	1/2”
Fuel Loading Cap	KxK1	mm	504x296	504x296	504x296	504x296	504x296	504x296	504x392	504x392
Fan Model			ERF2 RS	ERF2 RS	ERF2 RS	ERF2 RS	ERF2 RS	ERF2 RS	ERF2 RS	ERF2 RS
Fan Flow		m^3	1600	1600	1600	1600	1600	1600	1600	1600
Fan Operating Voltage (Three-Phase)		V	380	380	380	380	380	380	380	380
Operating Pressure		bar	4	4	4	4	4	4	4	4

TKM TECHNICAL SPECIFICATIONS									
Model			TKM 350	TKM 400	TKM 450	TKM 500	TKM 600	TKM 700	TKM 800
Capacity		kcal/h	350.000	400.000	450.000	500.000	600.000	700.000	800.000
		kW	406	464	522	580	696	812	928
Width	A	mm	1347	1500	1500	1500	1780	1780	1780
Height	H	mm	1398	1536	1536	1536	1810	1810	1810
Height	H1	mm	1574	1714	1714	1714	1991	1991	1991
Length	L	mm	2453	2438	2438	2688	2730	2730	2730
Foot Length	L1	mm	1739	1732	1732	1982	1984	1984	2314
Chimney Diameter	E	mm	300	500	500	500	580	580	580
Chimney Height	H2	mm	1146	1170	1170	1170	1342	1342	1342
Hot Water Trip (PN16)	F	DN	65	80	100	100	125	125	125
Water Volume		lt	852	1074	1030	1172	1790	1656	1923
Anhydrous Weight		kg	2030	2360	2470	2755	3335	3650	3855
Safety Trip	S	inch	1 1/4”	1 1/4”	1 1/4”	1 1/4”	1 1/2”	1 1/2”	1 1/2”
Filling/Discharging	S1	inch	1”	1”	1”	1”	1”	1”	1”
Indicator Sleeve	S2	inch	1/2”	1/2”	1/2”	1/2”	1/2”	1/2”	1/2”
Fuel Loading Cap	KxK1	mm	504x392	504x392	504x392	504x392	504x392	504x392	504x392
Fan Model			ERF3	ERF3	ERF3	ERF3	ERF3	ERF3	ERF3
Fan Flow		m^3	1900	1900	1900	1900	2500	2500	3500
Fan Operating Voltage (Three-Phase)		V	380	380	380	380	380	380	380
Operating Pressure		bar	4	4	4	4	4	4	4

Solid Fuel Fired Three-Pass Manual Loaded Room Heater

TKS Series; Solid fueled manual room heaters are manufactured as semi-cylindrical and threepass systems. 5 different types of production are made within the range of kcal/h (93 kW) 100,000 kcal/h (kW). Maximum heat transfer and fuel saving are ensured by distributing the heat equally obtained through its threepass design. Since the whole fuel is contacted with fan controlled combustion system, the rate of unburned coal is low. In this way, ideal combustion is ensured.

Features

- High combustion efficiency up to 82%.
- Wide combustion chamber suitable for coal, lignite coal and wood burning.
- Fuel loading, ash disposal and cleaning easiness with three different cover design.
- Adjustable caps with custom-designed cover handle and hinge structure.
- Combustion safety and fume resistance with locking lid and combustion safety.
- Low gas emission values with eco-friendly design.
- Protection against all kinds of outer effect with steel construction in prismatic structure.
- Coating with electrostatic power paint on galvanized sheet.
- Standard operating pressure 2 bars.
- Semicircular boiler body.
- Ease of shaking and ash discharge with mobile casting grating.
- Pipe bundle between passes excluding three pass burning room.
- Use of 3.1 certificated boiler tube compatible with 10217-2 norm.
- Frequency-controlled, energy-efficient circulation pumps.
- Common service network.
- State-of-the-art manufacturing techniques.
- Compliance with national and International norms.

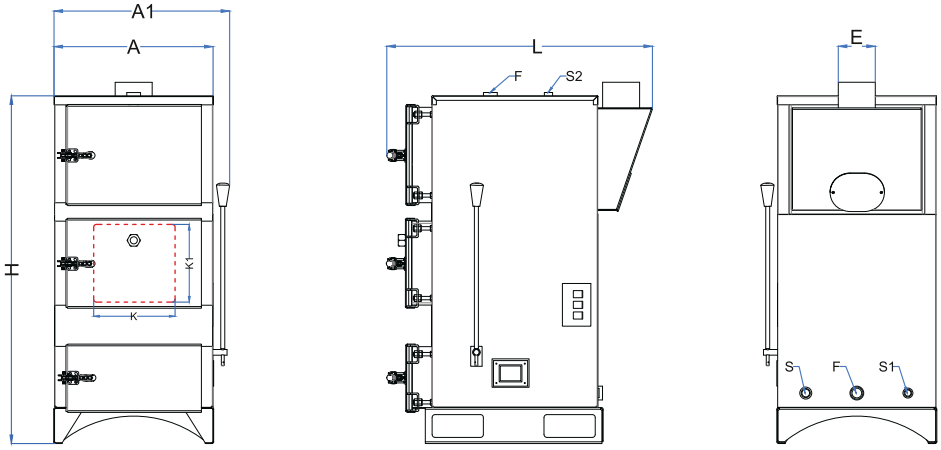

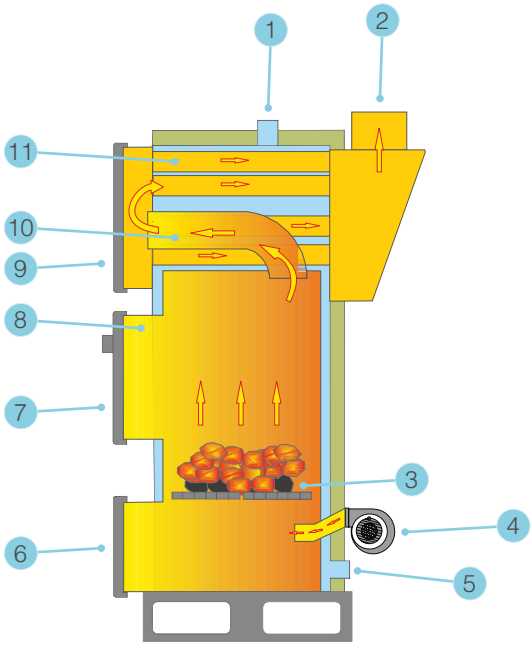

1	Installation Outlet Sleeve
2	Chimney Outlet
3	Moving Cast Grate
4	Fan
5	Installation Return Sleeve
6	Ash Cover
7	Feeding Cover
8	Burning Room (1st Pass)
9	Cleaning Cover
10	Smoke Pipe (2nd Pass)
11	Smoke Pipe (3rd Pass)

TKS TECHNICAL SPECIFICATIONS							
Model			TKS 25	TKS 40	TKS 60	TKS 80	TKS 100
Capacity		kcal/h	25.000	40.000	60.000	80.000	100.000
		kW	29	47	70	93	116
Weight	A	mm	560	560	660	678	678
Weight	A1	mm	603	603	723	712	712
Height	H	mm	1222	1222	1448	1578	1578
Length	L	mm	808	866	904	907	1057
Chimney Diameter	E	mm	130	130	170	170	170
Hot Water Trip	F	inch	1”	1 1/4”	1 1/2”	2”	2”
Water Volume		lt	47	85	133	185	234
Anhydrous Weight		kg	255	295	415	520	605
Safety Trip	S	inch	3/4”	3/4”	3/4”	3/4”	3/4”
Filling/Discharging	S1	inch	1/2”	1/2”	1/2”	1/2”	1/2”
Indicator Sleeve	S2	inch	1/2”	1/2”	1/2”	1/2”	1/2”
Fuel Loading Cap	KxK1	mm	286x273	286x273	365x280	410x345	410x345
Fan Model			125/60	125/60	140/60	140/60	140/60
Fan Flow		m^3	275	275	485	485	600
Fan Engine Power		watt	84	84	137	137	137
Operating Voltage (Mono-Phase)		V	220	220	220	220	220
Circulation Pump Model		Wilo	25/6	25/7	25/7		
Pump Operating Voltage (Mono-Phase)		V	220	220	220		
Pump Power		watt	45	45	45		
Pump Connection Diameter		inch	1”	1”	1”		
Operating Pressure		bar	2	2	2	2	2

FKSB Series

Solid Fuel Fired Four-Pass Manual Loaded Room Heater

FKSB Series; Solid fueled manual loaded room heaters are manufactured as four-pass systems. 3 different types of production are made within the range of 25.000 kcal/h (29 kW) to 60,000 kcal/h (70 kW). Since the whole fuel is contacted with fan controlled combustion system, the rate of unburned coal is low. Complete burning is performed with secondary air ducts located within combustion chamber. Thanks to its four-pass design, it is designed in a way to burn fuels such as low-calorie domestic coal and wood in a highly efficient and environmentalist way. It allows maximum heat transfer and fuel saving by distributing obtained heat equally.

Features

- High combustion efficiency up to 80%.
- Wide combustion chamber suitable for coal, lignite coal and wood burning.
- Fuel loading, ash disposal and cleaning easiness with three different cover design.
- Ease of loading and combustion thanks to wide fuel feeding neck.
- Adjustable caps with custom-designed cover handle and hinge structure.
- Combustion safety and fume resistance with locking lid and combustion safety.
- Low gas emission values with eco-friendly design.
- Protection against all kinds of outer effect with steel construction in prismatic structure.
- Coating with electrostatic power paint on galvanized sheet.
- Standard operating pressure 2 bars.
- Ease of cleaning thanks to plated design (baffle) between passes.
- Ease of shaking and ash discharge with mobile casting grating.
- Use of 3.1 certificated boiler tube compatible with 10217-2 norm.
- Frequency-controlled, energy-efficient circulation pumps.
- Common service network.
- State-of-the-art manufacturing techniques.
- Compliance with national and International norms.

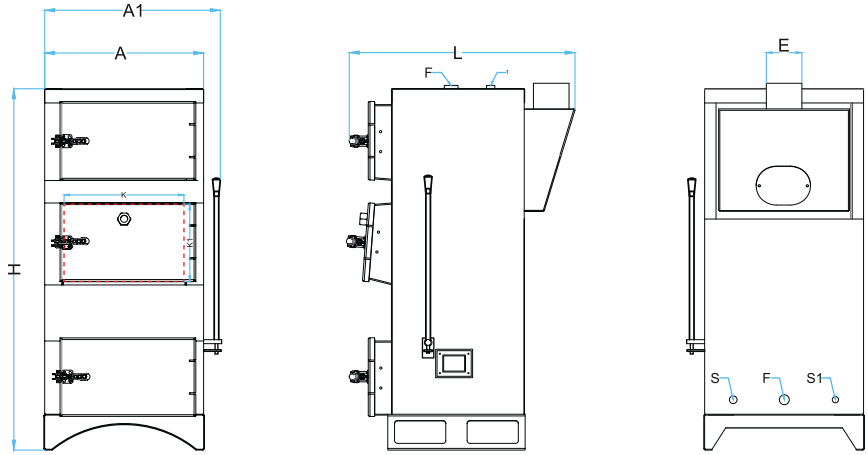

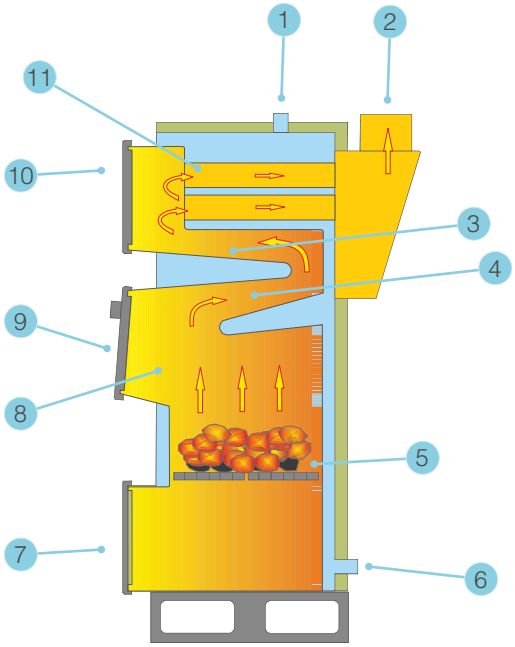

1	Installation Outlet Sleeve
2	Chimney Outlet
3	Baffle (3rd Pass)
4	Baffle (2nd Pass)
5	Moving Molding Grate
6	Installation Return Sleeve
7	Ash Cover
8	Burning Room (1st Pass)
9	Feeding Cover
10	Cleaning Cover
11	Smoke Pipe (4th Pass)

FKSB TECHNICAL SPECIFICATIONS					
Model			FKSB 25	FKSB 40	FKSB 60
Capacity		kcal/h	25.000	40.000	60.000
		kW	29	47	70
Weight	A	mm	558	558	629
Weight	A1	mm	625	625	688
Height	H	mm	1270	1270	1504
Length	L	mm	804	928	980
Chimney Diameter	E	mm	130	170	170
Hot Water Trip	F	inch	1”	1 1/4”	1 1/2”
Safety Trip	S	inch	3/4”	3/4”	3/4”
Filling/Discharging	S1	inch	1/2”	1/2”	1/2”
Indicator Sleeve	S2	inch	1/2”	1/2”	1/2”
Fuel Loading Cap	KxK1	mm	422x275	422x275	492x305
Water Volume		lt	47	85	133
Anhydrous Weight		kg	240	300	390
Fan Model			125/50	125/60	140/60
Fan Flow		m^3	250	380	590
Fan Engine Power		watt	84	84	137
Operating Voltage (Mono-Phase)		V	220	220	220
Circulation Pump Model		Wilo	25/6	25/7	25/7
Pump Operating Voltage (Mono-Phase)		V	220	220	220
Pump Power		watt	45	45	45
Pump Connection Diameter		inch	1”	1”	1”
Operating Pressure		bar	2	2	2

Solid Fuel Fired Four-Pass Full Baffle Manual Loaded Room Heater

FKB Series; Solid fueled manual loaded room centrally heated are manufactured as four-pass and full baffle systems. 3 different types of production are made within the range of 60,000 kcal/h (35 kW) to 30,000 kcal/h (70 kW). Since the whole fuel is contacted with fan controlled combustion system, the rate of unburned coal is low. Complete burning is performed with secondary air ducts located within combustion chamber. Thanks to its four-pass baffle (plated) design, it is designed in a way to burn fuels such as , low-calorie domestic coal and wood in a highly efficient and environmentalist way. It allows maximum heat transfer and fuel saving by distributing obtained heat equally.

Features

- High combustion efficiency up to 80%.
- Wide combustion chamber suitable for coal, lignite coal and wood burning.
- Fuel loading, ash disposal and cleaning easiness with three different cover design.
- Ease the reservoir of loading and tobacco thanks to wide fuel feeding neck and chamber.
- Adjustable caps with custom-designed cover handle and hinge structure.
- Combustion safety and fume resistance with locking lid and combustion safety.
- Low gas emission values with eco-friendly design.
- Protection against all kinds of outer effect with steel construction in prismatic structure.
- Coating with electrostatic power paint on galvanized sheet.
- Standard operating pressure 2 bars.
- Ease of cleaning thanks to plated design (baffle) between passes.
- Ease of shaking and ash discharge with mobile casting grating.
- Use of 3.1 certificated boiler tube compatible with 10217-2 norm.
- Frequency-controlled, energy-efficient circulation pumps.
- Common service network.
- State-of-the-art manufacturing techniques.
- Compliance with national and International norms.

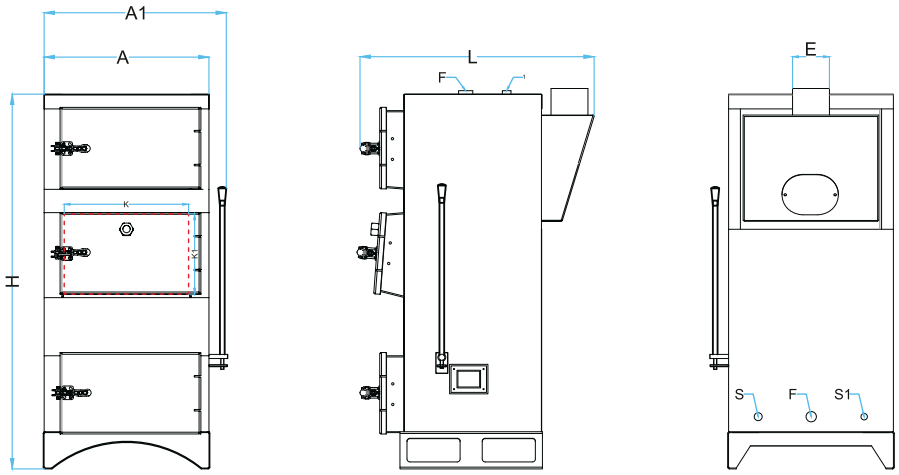

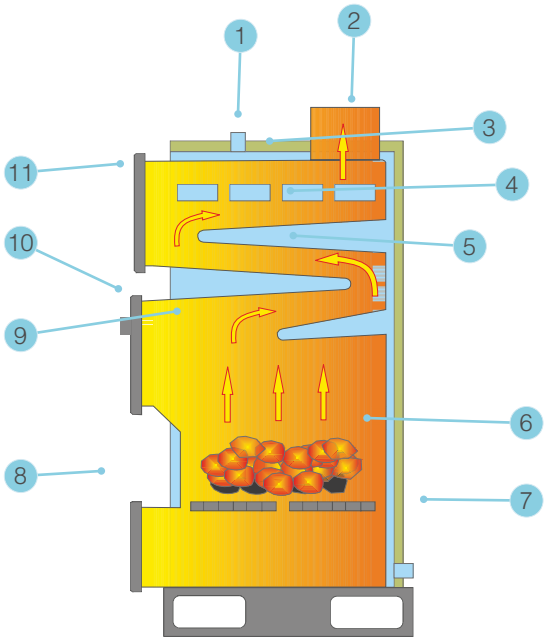

1	Installation Outlet Sleeve
2	Chimney Outlet
3	Baffle (4th Pass)
4	Baffle (3rd Pass)
5	Baffle (2nd Pass)
6	Moving Molding Grade
7	Installation Return Sleeve
8	Ash Cover
9	Burning Room (1st Pass)
10	Feeding Cover
11	Cleaning Cover

FKB TECHNICAL SPECIFICATIONS					
Model			FKB 30	FKB 40	FKB 60
Capacity		kcal/h	30.000	40.000	60.000
		kW	35	52	70
Weight	A	mm	563	563	634
Weight	A1	mm	625	625	696
Height	H	mm	1263	1313	1584
Length	L	mm	635	760	760
Chimney Diameter	E	mm	130	170	170
Hot Water Trip	F	inch	1”	1 1/4”	1 1/2”
Safety Trip	S	inch	3/4”	3/4”	3/4”
Filling/Discharging	S1	inch	1/2”	1/2”	1/2”
Indicator Sleeve	S2	inch	1/2”	1/2”	1/2”
Fuel Loading Cap	KxK1	mm	422x253	422x253	492x285
Water Volume		lt	48	88	140
Anhydrous Weight		kg	265	325	450
Fan Model			125/50	125/60	140/60
Fan Flow		m^3	250	380	590
Fan Engine Power		watt	84	84	137
Operating Voltage (Mono-Phase)		V	220	220	220
Circulation Pump Model		Wilo	25/6	25/7	25/7
Pump Operating Voltage (Mono-Phase)		V	220	220	220
Pump Power		watt	45	45	45
Pump Connection Diameter		inch	1”	1”	1”
Operating Pressure		bar	2	2	2

OKS Series

Solid Fuel Fired Three-Pass Automated Loaded (Stoker) Room Heater

OKS Series; Solid fueled automated loaded room heaters are manufactured as semicylindrical and three-pass systems. 7 different types of production are made within the range of 25.000 kcal/h (29 kW) to 15,000 kcal/h (174 kW). Since the whole fuel is contacted with fan-controlled combustion system, the rate of unburned coal is low. Thanks to its three-pass design, it is designed in a way to burn fuels such as low-calorie domestic coal and wood in a highly efficient and environmentalist way. It allows maximum heat transfer and fuel saving by distributing by hand heat equally. While fuel loading is performed below via spiral thanks to automated fuel loading system, burning continues above, passage of smoke from spiral pipe to bunker is prevented due to special design of spiral loading system and an efficient combustion is ensured. At the same time, fuel consumption is reduced since thee are no errors or overloading resulting from incomplete burning errors.

Features

- High combustion efficiency up to 82%.
- Compatible to burning of nut coal at 10-25 mm sizes.
- Fuel loading, ash disposal and cleaning easiness with three different cover design.
- Adjustable caps with custom-designed cover handle and hinge structure.
- Combustion safety and fume resistance with locking lid and combustion safety.
- Specially designed chrome alloy casting ladle.
- Low gas emission values with eco-friendly design.
- Protection against all kinds of outer effect with steel construction in prismatic structure.
- Coating with electrostatic power paint on galvanized sheet.
- Standard operating pressure 2 bars.
- Semicircular boiler body.
- Ease of maintenance with detachable bunker.
- Key allowing forward-backward movement above reduction gear for coal jammings.
- Window type flame crushers in smoke pipes (turbulator).
- Frequency-controlled, energy-efficient circulation pumps.
- Use of 3.1 certificated boiler tube compatible with 10217-2 norm.
- Common service network.
- State-of-the-art manufacturing techniques.
- Compliance with National and International norms.

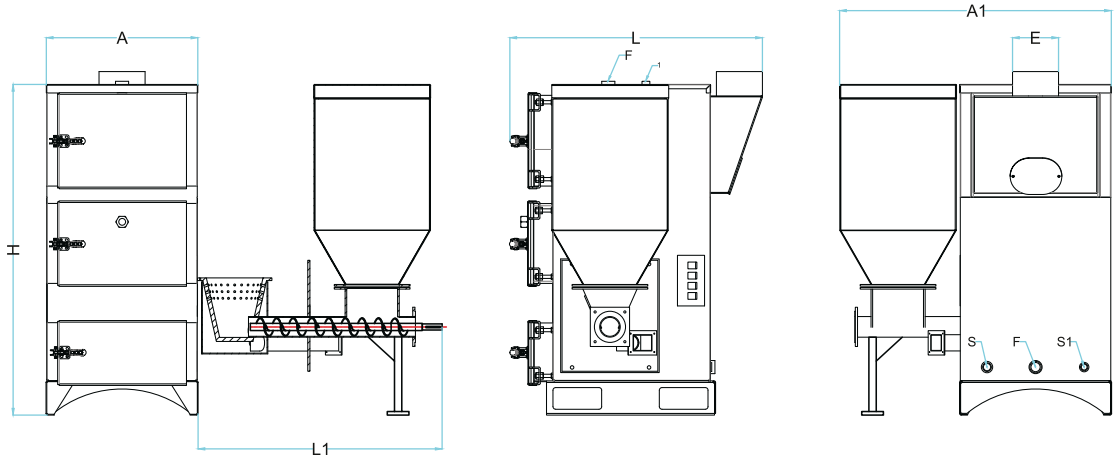

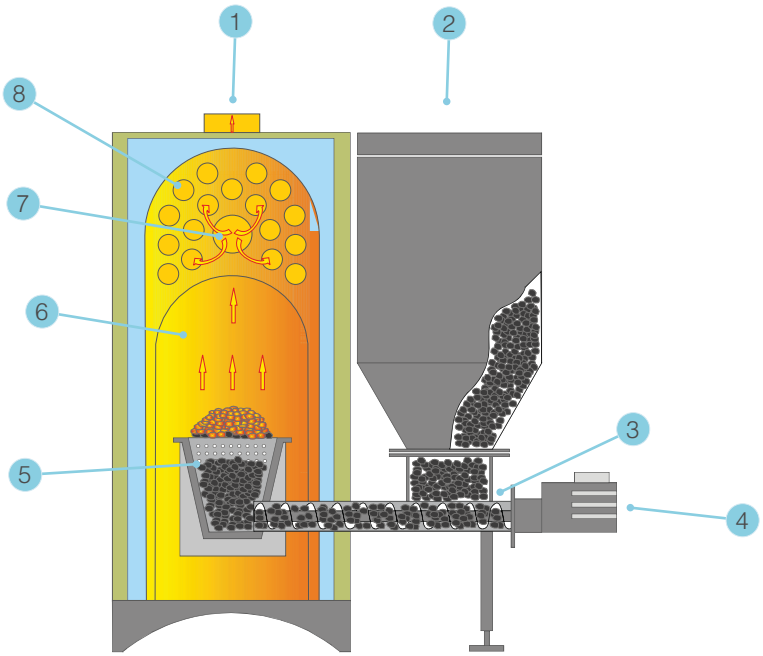

1	Chimney Outlet
2	Bunker
3	Helical Shaft
4	Reductor
5	Pot
6	Burning Room (1st Pass)
7	Smoke Pipe (2nd Pass)
8	Smoke Pipe (3rd Pass)

OKS TECHNICAL SPECIFICATIONS									
Model			OKS 25	OKS 40	OKS 60	OKS 80	OKS 100	OKS 125	OKS 150
Capacity		kcal/h	25.000	40.000	60.000	80.000	100.000	125.000	150.000
		kW	29	47	70	93	116	145	174
Weight	A	mm	560	560	660	706	706	767	767
Weight	A1	mm	1004	1004	1272	1366	1366	1450	1450
Height	H	mm	1222	1222	1448	1765	1765	1836	1836
Length	L	mm	808	933	973	871	1055	1443	1643
Bunker Exit Distance	L1	mm	904	904	1124	1124	1256	1410	1410
Chimney Diameter	E	mm	125	170	170	170	170	250	250
Hot Water Trip	F	inch	1”	1 1/4”	1 1/2”	2”	2”	2 1/2”	2 1/2”
Safety Trip	S	inch	3/4”	3/4”	3/4”	3/4”	3/4”	3/4”	3/4”
Filling/Discharging	S1	inch	1/2”	1/2”	1/2”	1/2”	1/2”	1/2”	1/2”
Indicator Sleeve	S2	inch	1/2”	1/2”	1/2”	1/2”	1/2”	1/2”	1/2”
Water Volume		lt	47	85	133	185	234	320	362
Anhydrous Weight		kg	350	390	540	630	745	1055	1170
Bunker Capacity		lt	120	120	260	310	310	450	450
Fan Model			125/60	160/60	160/60	ERF 2	ERF 2	ERF 3	ERF 3
Fan Flow		m^3	275	700	700	1600	1600	1900	1900
Fan Engine Power		watt	84 W	193 W	193 W	0,37 kW	0,37 kW	0,55 kW	0,55 kW
Operating Voltage (Mono-Phase)		V	220	220	220	220	220	220	220
Circulation Pump Model		Wilo	25/6	25/7	25/7				
Pump Operating Voltage (Mono-Phase)		V	220	220	220				
Pump Power		watt	45	45	45				
Pump Connection Diameter		inch	1”	1”	1”				
Gearhead Power		kW	0.37	0.37	0.37	0.75	0.75	0.75	0.75
Fan and Reducer Operating Voltage (Mono-Phase)		V	220	220	220	220	220	220	220
Operating Pressure		bar	2	2	2	2	2	2	2

FKSB Series

Solid Fuel Fired Four-Pass Automatic Loaded Room Heater

FKSB Series; Solid fueled fully automated loaded room heaters are manufactured as prismatic body baffled and tube bundle four-pass systems. 3 different types of production are made within the range of 30.000 kcal/h (35 kW) to 60,000 kcal/h (70 kW). Since the whole fuel is contacted with fan controlled combustion system, the rate of unburned coal is low.

Features

- High combustion efficiency up to 82%.
- Compatible to burning of nut coal at 10-25 mm sizes.
- Wide combustion chamber suitable for coal, lignite coal and wood burning.
- Automatic ignition property.
- Automatic mixing property.
- Automatic ash removal property.
- Fuel loading, ash disposal and cleaning easiness with three different cover design.
- Adjustable caps with custom-designed cover handle and hinge structure.
- Combustion safety and fume resistance with locking lid and combustion safety.
- Specially designed chrome alloy casting ladle.
- Low gas emission values with eco-friendly design.
- Protection against all kinds of outer effect with steel construction in prismatic structure.
- Coating with electrostatic power paint on galvanized sheet.
- Standard operating pressure 2 bars.
- Ease of maintenance with detachable bunker.
- Key allowing forward-backward movement above reduction gear for coal jammings.
- Use of 3.1 certificated boiler tube compatible with 10217-2 norm.
- Frequency-controlled, energy-efficient circulation pumps.
- Window type flame crushers in smoke pipes (turbulator).
- Extensive service network.
- State-of-the-art manufacturing techniques.
- Compliance with national and International norms.

Automated Fuel Loading System

While fuel loading is performed below via spiral, burning continues above, passage of smoke from spiral pipe to bunker is prevented due to special design of spiral loading system and an efficient combustion is ensured. At the same time, fuel consumption is reduced being now that thee are no errors or overloading resulting from incomplete burning errors.

Automatic and Manual Loading

While 10-25 mm nut coal is burned, at the same time, it is designed in a way to burn fuels such as low calorie domestic coal and wood type fuels in a high efficient and environmentally friendly way with its liquid grating manual loading and burning opportunity.

Auto Ignition System

Its automatic ignition system which leaves no need to use wood, kindling etc. to burn coal, ignites coal in a shorter time period with a button and it is automatically disabled when process is completed.

Automated Mixing

Thanks to automatic mixing installation located on crucible, coal on above side of crucible is mixed continuously during combustion, possible clinkers on coal are prevented and at the same time, combustio datasets of correctly is also increased.

Automated Ash Removal

Ash and slag falling from the pot as a result of combustion are transported to ash chest located in the front side thanks to spiral shaft system. Wastes deposited on ash box are moved away from boiler room easily and effortlessly.

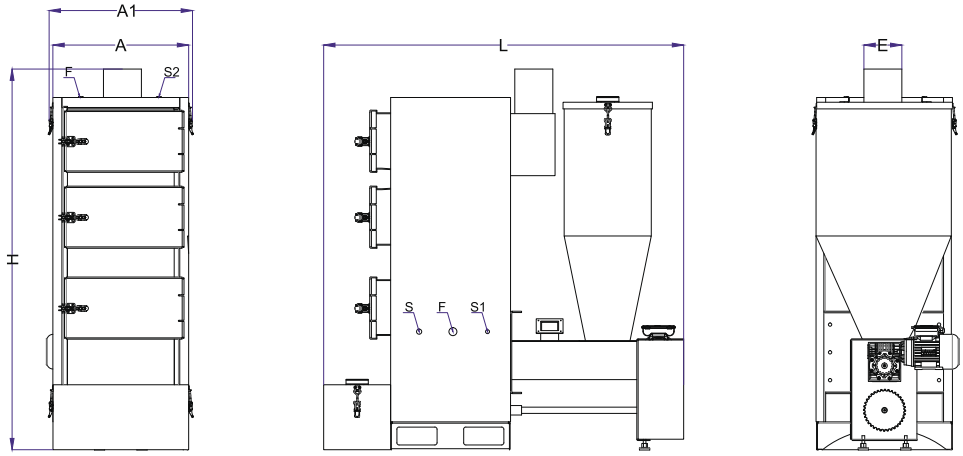

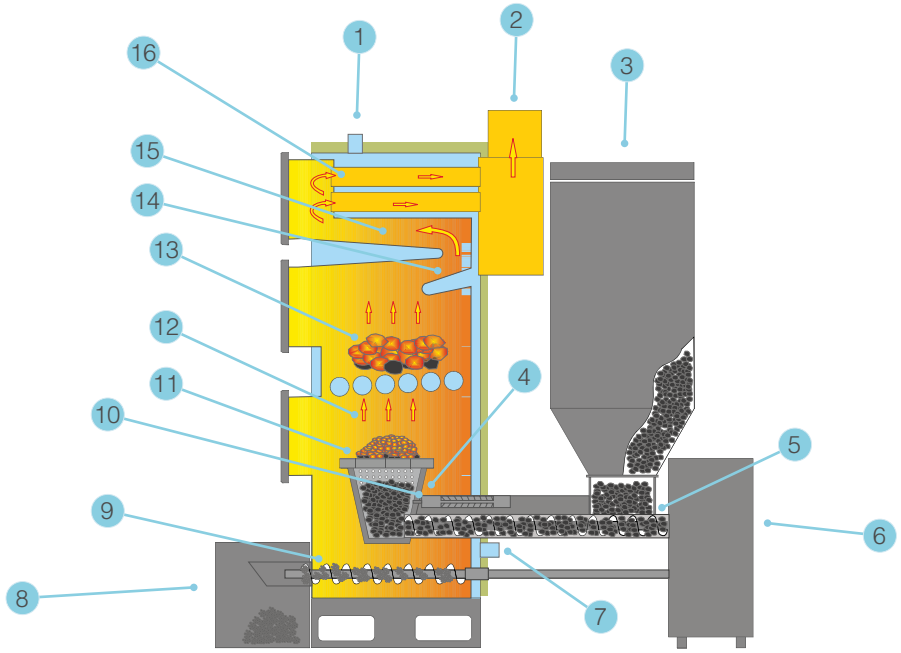

1	Installation Outlet Sleeve	9	Automated Ash Discharge
2	Chimney Outlet	10	Automated Igniting
3	Bunker	11	Automated Mixing
4	Pot	12	Burning Room (1st Pass)
5	Helical Shaft	13	Water Cooling Grating
6	Reductor	14	Baffle (2nd Pass)
7	Installation Return Sleeve	15	Baffle (3rd Pass)
8	Ash Chamber	16	Smoke Pipe (4th Pass)

FKSB TECHNICAL SPECIFICATIONS					
Model			FKSB 30	FKSB 45	FKSB 60
Capacity		kcal/h	30.000	45.000	60.000
		kW	35	52	70
Weight	A	mm	600	600	624
Weight	A1	mm	607	607	632
Height	H	mm	1517	1701	1750
Length	L	mm	1640	1640	1700
Bunker Exit Distance	L1	mm	904	904	1124
Chimney Diameter	E	mm	125	170	170
Hot Water Trip	F	inch	1”	1 1/4”	1 1/2”
Safety Trip	S	inch	3/4”	3/4”	3/4”
Filling/Discharging	S1	inch	1/2”	1/2”	1/2”
Indicator Sleeve	S2	inch	1/2”	1/2”	1/2”
Water Volume		lt	60	88	130
Anhydrous Weight		kg	520	600	800
Bunker Capacity		lt	120	120	260
Fan Model			125/60	160/60	160/60
Fan Flow		m^3	275	700	700
Fan Engine Power		watt	84 W	193 W	193 W
Operating Voltage (Mono-Phase)		V	220	220	220
Circulation Pump Model		Wilo	25/7	25/7	25/7
Pump Operating Voltage (Mono-Phase)		V	220	220	220
Pump Power		watt	45	45	45
Pump Connection Diameter		inch	1”	1”	1”
Gearhead Power		kW	0.37	0.37	0.37
Fan ve Reductor Operating Voltage (Mono-Phase)		V	220	220	220
Operating Pressure		bar	2	2	2

Cascade Control Panel

RVS boiler control panels have a modular structure that can be chosen according boiler system to be applied. Boiler control panel adjusts boiler water outlet temperature according to outer air temperature, controls 3-way valve and pumps. Thanks to cascade system which allows operation of more than one boiler as a single unit, it is available as an option for the 15 boiler to MIT gas fueled boilers.
In addition to its basic features such radiator, convector, floor and ceiling heating compatible; outside air compensation and weekly time schedule, it can provide a compete heating automation thanks to its multi-functional inlets and outlets and various additional features such as sun collector, additional pump, additional electric heater control for usage water. With its ability to control also wall type boilers, RVS can be accessed remotely, and its control can be made over mobile phone.
You can control your system with time schedule, you can be restart your device 3 times within the day. While your device works according to comfort conditions you have specified during desired hours, it works in economy mode and you can here by save.

Advantages of Siemens Cascade Control Panel

- Easy setup and operation with a user interface supporting English character.
- Compliance with wired and wireless field devices.
- Advanced service module.
- Remote access opportunity.

Usage Areas

- Building with central heating system.
- Building and commercial fields with self heating and usage water.
- Standard heating systems.

Features

- Suitable for radiator, convector, floor and ceiling heating.
- Suitable for both floor and wall type boilers.
- Domestic water and reserve tank heating.
- Weather compensation.
- Weekly time schedule.
- Remote access.
- Control via mobile phone with smartphone app.

TLG Series

Liquid Gas Fueled Three-Pass Hot Water Boiler

TLG Series; Three-pass liquid and gas-fired hot water boilers are specially designed for central heating systems with their high combustion efficiency, optimal flue gas emissions, quiet operation and long operating life.

Features

- High combustion efficiency up to 95%.
- Window type flame crushers in secondary pass pipes (turbulators).
- Suitable for standard barrel burner use.
- Microprocessor control panel that can control burner and pump system.
- Siemens Albatros Series RVS Model Control Panels offering comfort and economy together. (Optional)
- Water cooled cover system.
- Standard operating pressure 4 bars.
- Full cylindrical boiler body.
- Body shell coated with electrostatic power paint on deposit sheet.
- 80 mm thick mineral-based insulation on body and front cover.
- Production opportunity up to 8 bar on request.
- On-site manufacturing facilities.
- Pipe bundle between passes excluding three pass burning room.
- Compatibility with integrated and external stainless economizer applications.
- 3.1 certificated boiler tube compatible abidance 10217-2 norm.
- Compliance with national and International norms.

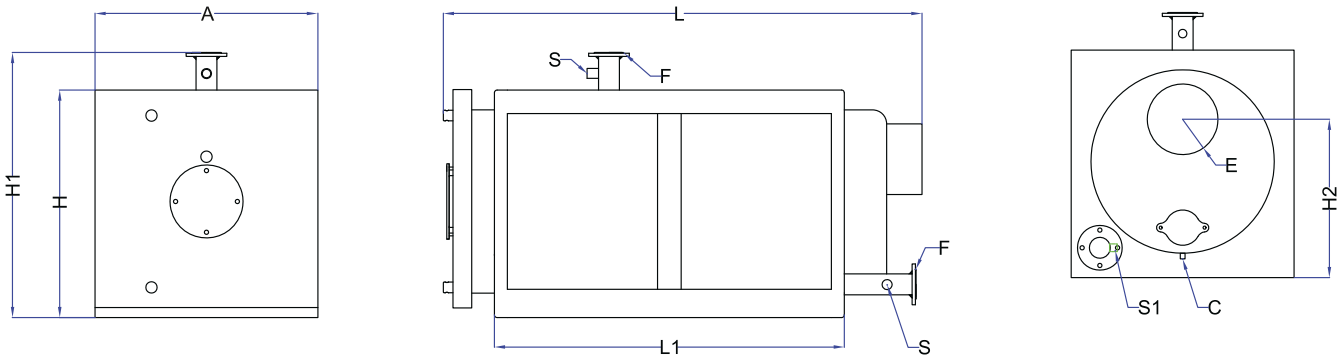

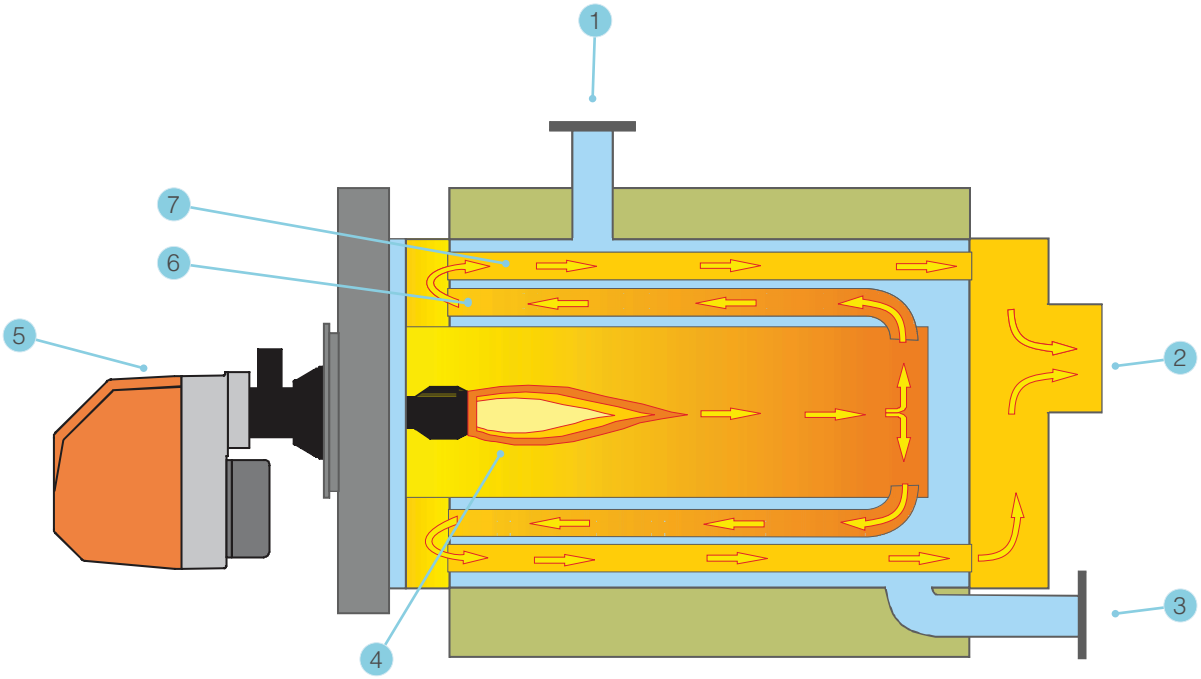

1	Installation Inlet Flange
2	Chimney Outlet
3	Installation Return Flange
4	Burning Room (1st Pass)
5	Burner
6	Smoke Pipe (2nd Pass)
7	Smoke Pipe (3rd Pass)

TLG TECHNICAL SPECIFICATIONS								
Model			TLG 80	TLG 100	TLG 125	TLG 150	TLG 175	TLG 200
Capacity		kcal/h	80.000	100.000	125.000	150.000	175.000	200.000
		kW	93	116	145	174	203	232
Weight	A	mm	771	771	771	894	894	894
Weight	H	mm	791	791	791	914	914	914
Height	H1	mm	968	968	968	1091	1091	1091
Height	L	mm	1349	1429	1529	1529	1629	1629
Length	L1	mm	782	882	982	982	1082	1082
Foot Length	E	mm	200	200	200	200	200	200
Chimney Diameter	H2	mm	550	550	550	665	665	665
Chimney Height	F	DN	65	65	65	65	65	65
Hot Water Trip (PN 16)		lt	118	135	138	240	260	251
Water Volume		kg	425	460	505	610	660	670
Anhydrous Weight	S	inch	1 1/4”	1 1/4”	1 1/4”	1 1/4”	1 1/4”	1 1/4”
Safety Trip	S1	inch	1/2”	1/2”	1/2”	1/2”	1/2”	1/2”
Condensation Drain	C	inch	1/2”	1/2”	1/2”	1/2”	1/2”	1/2”
Back Pressure		mbar	1.2	1.3	1.5	2.2	2.3	2.5
Standard Operating Pressure		bar	4	4	4	4	4	4

TLG TECHNICAL SPECIFICATIONS								
Model			TLG 250	TLG 300	TLG 350	TLG 400	TLG 450	TLG 500
Capacity		kcal/h	250.000	300.000	350.000	400.000	450.000	500.000
		kW	290	348	406	464	522	580
Weight	A	mm	947	947	947	1113	1113	1113
Weight	H	mm	967	967	967	1133	1133	1133
Height	H1	mm	1144	1144	1144	1312	1312	1312
Height	L	mm	1879	2054	2054	2040	2140	2290
Length	L1	mm	1332	1487	1487	1487	1587	1732
Foot Length	E	mm	300	300	300	300	300	300
Chimney Diameter	H2	mm	670	670	670	849	849	849
Chimney Height	F	DN	65	65	80	80	100	100
Hot Water Trip (PN 16)		lt	354	376	357	578	610	670
Water Volume		kg	815	885	925	1070	1145	1275
Anhydrous Weight	S	inch	1 1/4”	1 1/4”	1 1/4”	1 1/4”	1 1/4”	1 1/4”
Safety Trip	S1	inch	1/2”	1/2”	1/2”	1”	1”	1”
Condensation Drain	C	inch	1/2”	1/2”	1/2”	1”	1”	1”
Back Pressure		mbar	2.8	3	3.8	5.2	5.2	5.7
Standard Operating Pressure		bar	4	4	4	4	4	4

TLG TECHNICAL SPECIFICATIONS								
Model			TLG 600	TLG 700	TLG 800	TLG 900	TLG 1000	TLG 1250
Capacity		kcal/h	600.000	700.000	800.000	900.000	1.000.000	1.250.000
		kW	696	812	928	1044	1160	1453
Weight	A	mm	1269	1269	1269	1463	1463	1463
Weight	H	mm	1309	1309	1309	1483	1483	1483
Height	H1	mm	1490	1490	1490	1664	1664	1664
Height	L	mm	2287	2407	2557	2549	2549	2754
Length	L1	mm	1734	1834	1984	1984	1984	2189
Foot Length	E	mm	350	350	350	500	500	500
Chimney Diameter	H2	mm	945	945	945	1078	1078	1078
Chimney Height	F	DN	125	125	125	125	125	125
Hot Water Trip (PN 16)		lt	900	932	996	1368	1385	1412
Water Volume		kg	1480	1695	1780	2180	2360	2510
Anhydrous Weight	S	inch	1 1/2”	1 1/2”	1 1/2”	2”	2”	2”
Safety Trip	S1	inch	1”	1”	1”	1”	1”	1”
Condensation Drain	C	inch	1”	1”	1”	1”	1”	1”
Back Pressure		mbar	5.8	5.9	6	5.2	5.2	5.8
Standard Operating Pressure		bar	4	4	4	4	4	4

TLG TECHNICAL SPECIFICATIONS								
Model			TLG 1500	TLG 1750	TLG 2000	TLG 2500	TLG 3000	TLG 3500
Capacity		kcal/h	1.500.000	1.750.000	2.000.000	2.500.000	3.000.000	3.500.000
		kW	1740	2030	2320	2900	3480	4060
Weight	A	mm	1654	1654	1654	1648	1782	1880
Weight	H	mm	1674	1674	1674	1688	1802	1900
Height	H1	mm	1855	1855	1855	1971	1985	2083
Height	L	mm	3054	3354	3754	4060	5085	4612
Length	L1	mm	2484	2784	3184	3474	4515	3986
Foot Length	E	mm	500	500	500	500	500	500
Chimney Diameter	H2	mm	1264	1264	1264	1279	1361	1510
Chimney Height	F	DN	150	150	150	200	200	200
Hot Water Trip (PN 16)		lt	2088	2363	2731	2714	2731	2580
Water Volume		kg	3450	3855	4430	4945	6555	6900
Anhydrous Weight	S	inch	2 1/2”	2 1/2”	2 1/2”	2 1/2”	2 1/2”	2 1/2”
Safety Trip	S1	inch	1”	1”	1”	1”	1”	1”
Condensation Drain	C	inch	1”	1”	1”	1”	1”	1”
Back Pressure		mbar	5.8	6.2	6.7	6.5	6.8	7
Standard Operating Pressure		bar	4	4	4	4	4	4

TLGS Series

Liquid Gas Fired Three-Pass Scotch Type Hot Water Boiler

TLGS Series; Three pass liquid and gas-fired steel hot water boilers are specially designed for scotch type tlgs model heating systems offering seamless operation, high combustion efficiency, low chimney gas emission values in our country and around the world.

Features

- High combustion efficiency up to 95%.
- Window type flame crushers in secondary pass pipes (turbulators).
- Suitable for standard barrel burner use.
- Microprocessor control panel that acceptable control burner and pump system.
- Siemens Albatros series model control panels offering comfort and economy together (optional).
- Standard operating pressure 4 bars.
- Full cylindrical boiler body.
- Aliminium embossed finish sheet coating.
- 80 mm thick mineral based insulation material on body.
- Production opportunity up to 10 bar on request.
- On-site manufacturing facilities.
- Pipe bundle between passes excluding three pass burning room.
- Ease of installation and maintenance thanks boiler upper sheet which is strong enough to walk on it.
- Front cover that are openable without the need of dismantling the burner.
- Return water routing plate.
- 3.1 certificated boiler tube compatible abidance 10217-2 norm.
- Compliance with national and international norms.

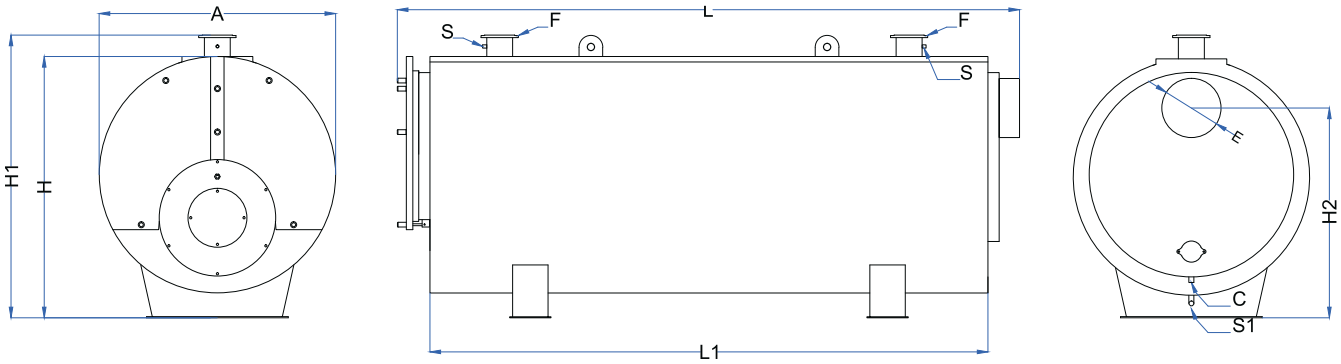

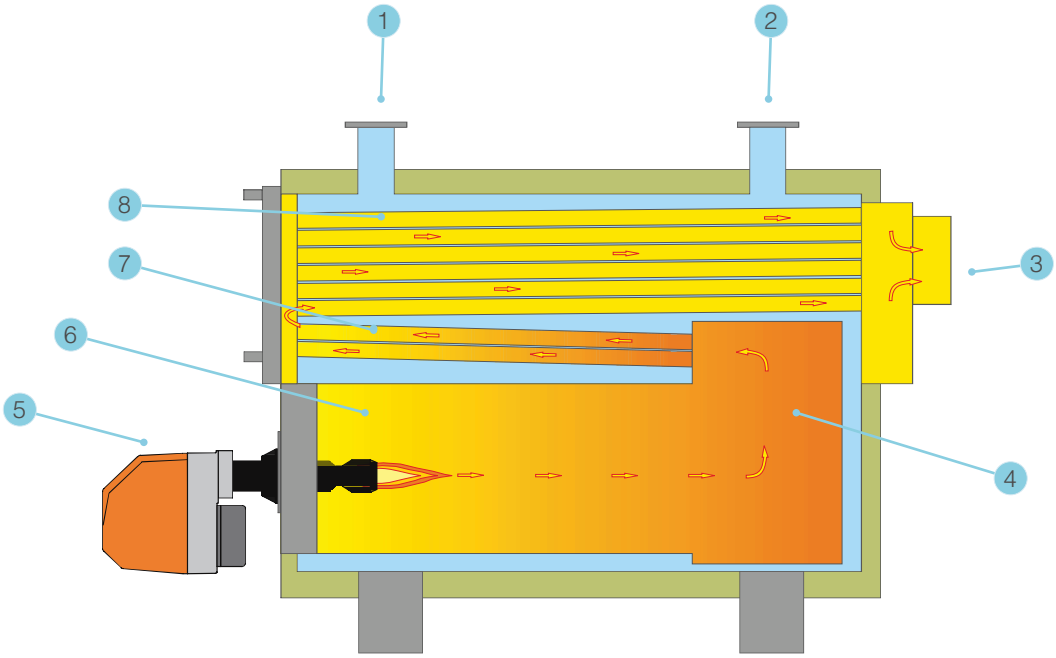

1	Installation Inlet Flange
2	Installation Return Flange
3	Chimney Outlet
4	Furnace Firebox
5	Burner
6	Burning Room (1st Pass)
7	Smoke Pipe (2nd Pass)
8	Smoke Pipe (3rd Pass)

TLGS TECHNICAL SPECIFICATIONS								
Model			TLGS 1000	TLGS 1250	TLGS 1500	TLGS 1750	TLGS 2000	TLGS 2500
Capacity		kcal/h	1.000.000	1.250.000	1.500.000	1.750.000	2.000.000	2.500.000
		kW	1160	1450	1740	2030	2320	2900
Weight	A	mm	1680	1680	1809	1809	1870	1892
Height	H	mm	1893	1893	2017	2017	2081	2106
Height	H1	mm	2073	2073	2198	2198	2259	2289
Length	L	mm	2720	2920	3515	3915	3915	4219
Foot Length	L1	mm	2194	2394	2994	3394	3394	3698
Chimney Diameter	E	mm	500	500	500	500	500	500
Chimney Height	H2	mm	1460	1460	1585	1585	1643	1670
Hot Water Trip (PN 16)	F	DN	125	125	150	150	150	200
Water Volume		lt	1879	1955	2894	3443	3844	4096
Anhydrous Weight		kg	3160	3560	4315	4850	5150	6210
Safety Trip	S	inch	1 1/2”	1 1/2”	1 1/2”	1 1/2”	1 1/2”	1 1/2”
Filling/Discharging	S1	inch	1”	1”	1”	1”	1”	1”
Condensation Drain	C	inch	1”	1”	1”	1”	1”	1”
Back Pressure		mbar	5.4	6	6	6.4	6.9	6.7
Standard Operating Pressure		bar	4	4	4	4	4	4

TLGS TECHNICAL SPECIFICATIONS							
Model			TLGS 3000	TLGS 3500	TLGS 4000	TLGS 4500	TLGS 5000
Capacity		kcal/h	3.000.000	3.500.000	4.000.000	4.500.000	5.000.000
		kW	3480	4060	4640	5220	5800
Weight	A	mm	2002	2110	2152	2244	2292
Height	H	mm	2212	2320	2360	2452	2502
Height	H1	mm	2293	2503	2543	2635	2687
Length	L	mm	5245	5251	5345	5747	6721
Foot Length	L1	mm	4724	4730	4826	5226	6200
Chimney Diameter	E	mm	500	500	500	600	600
Chimney Height	H2	mm	1776	1884	1884	1966	2014
Hot Water Trip (PN 16)	F	DN	200	200	200	200	200
Water Volume		lt	5589	6684	7292	8369	10141
Anhydrous Weight		kg	8050	8685	9430	10580	12650
Safety Trip	S	inch	1 1/2”	1 1/2”	1 1/2”	1 1/2”	1 1/2”
Filling/Discharging	S1	inch	1”	1”	1”	1”	1”
Condensation Drain	C	inch	1”	1”	1”	1”	1”
Back Pressure		mbar	7	7	7.2	7.2	7.4
Standard Operating Pressure		bar	4	4	4	4	4

Gas Fired Two-Pass (Counter Pressure) Hot Water Boiler

TWG Series (counter pressure) gas fueled steel hot water boilers are specially designed for central heating systems with high combustion efficiency, low chimney gas emission values, small sizes and long usage life.

In TWG model which has two-pass design, flame coming out of burner barrel move within furnace (combustion chamber) and hit the opposite mirror (floor). Gases in the flame returning to its source direction as a result of this impact are again met with burner flame within the same cell. With this encounter, unburnt or semi-burnt gas particles are burned again and leave their energy and transformed into heat. Gases burning with burner high pressure within furnace (combustion chamber) hit the front cover and are carried to back smoke box via smoke pipes and then to chimney from here.

Features

- High combustion efficiency up to 95%.
- Window type flame crushers in smoke pipes (turbulators).
- Suitable for long barrel burner use.
- Microprocessor control panel that acceptable control burner and pump system.
- Siemens Albatros series model control panels offering comfort and economy together. (Optional)
- Water cooled cover system.
- Standard operating pressure of 4 bars.
- Full cylindrical boiler body.
- Body shell coated with electrostatic power paint on deposit sheet.
- Minimum wait losses with 80 mm thick mineral-based insulation on body and front cover.
- Production opportunity up to 8 bar on request.
- On-site manufacturing facilities.
- 3.1 certificated boiler tube compatible with 10217-2 norm.
- Compliance with national and international norms.

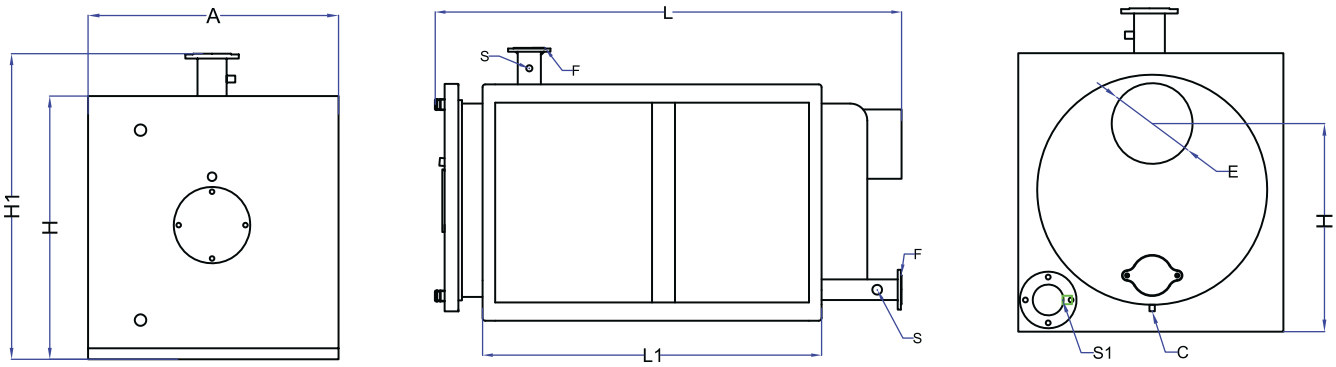

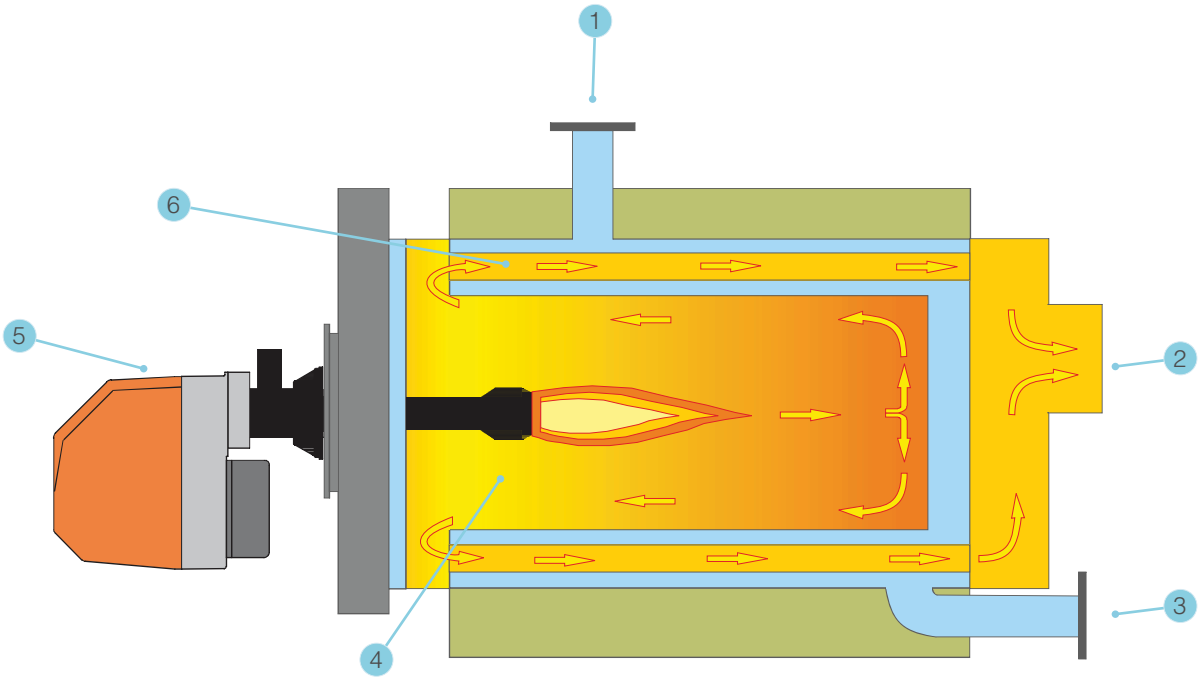

1	Installation Inlet Flange
2	Chimney Outlet
3	Installation Return Flange
4	Burning Room (1st Pass)
5	Burner
6	Smoke Pipe (2nd Pass)

TWG TECHNICAL SPECIFICATIONS							
Model			TWG 80	TWG 100	TWG 125	TWG 150	TWG 175
Capacity		kcal/h	80.000	100.000	125.000	150.000	175.000
		kW	93	116	145	174	203
Weight	A	mm	707	707	707	757	757
Height	H	mm	757	757	757	807	807
Height	H1	mm	933	933	933	983	983
Length	L	mm	1299	1299	1539	1544	1744
Foot Length	L1	mm	742	742	982	987	1187
Chimney Diameter	E	mm	200	200	200	200	200
Chimney Height	H2	mm	547	547	547	597	597
Hot Water Trip (PN 16)	F	DN	65	65	65	65	65
Water Volume		lt	118	118	145	160	191
Anhydrous Weight		kg	360	370	425	460	510
Safety Trip	S	inch	1 1/4”	1 1/4”	1 1/4”	1 1/4”	1 1/4”
Filling/Discharging	S1	inch	1/2”	1/2”	1/2”	1/2”	1/2”
Condensation Drain	C	inch	1”	1”	1”	1”	1”
Back Pressure		mbar	0.5	1.2	1.3	2.2	2.5
Operating Pressure		bar	4	4	4	4	4

TWG TECHNICAL SPECIFICATIONS							
Model			TWG 200	TWG 250	TWG 300	TWG 350	TWG 400
Capacity		kcal/h	200.000	250.000	300.000	350.000	400.000
		kW	232	290	348	406	464
Weight	A	mm	757	880	880	880	984
Height	H	mm	807	930	930	930	1034
Height	H1	mm	983	1107	1107	1107	1211
Length	L	mm	1744	1744	2039	2039	1939
Foot Length	L1	mm	1187	1187	1482	1482	1384
Chimney Diameter	E	mm	200	300	300	300	300
Chimney Height	H2	mm	597	670	670	670	772
Hot Water Trip (PN 16)	F	DN	65	65	65	80	80
Water Volume		lt	185	285	350	330	383
Anhydrous Weight		kg	530	635	745	800	900
Safety Trip	S	inch	1 1/4”	1 1/4”	1 1/4”	1 1/4”	1 1/4”
Filling/Discharging	S1	inch	1/2”	1/2”	1/2”	1”	1”
Condensation Drain	C	inch	1”	1”	1”	1”	1”
Back Pressure		mbar	3.3	3	2.8	2.5	3
Operating Pressure		bar	4	4	4	4	4

TWG TECHNICAL SPECIFICATIONS							
Model			TWG 450	TWG 500	TWG 600	TWG 700	TWG 800
Capacity		kcal/h	450.000	500.000	600.000	700.000	800.000
		kW	522	580	696	812	928
Weight	A	mm	984	984	1140	1140	1140
Height	H	mm	1034	1034	1160	1160	1160
Height	H1	mm	1211	1211	1341	1341	1341
Length	L	mm	1939	2039	2311	2311	2561
Foot Length	L1	mm	1384	1482	1734	1734	1984
Chimney Diameter	E	mm	300	300	350	350	350
Chimney Height	H2	mm	772	772	864	864	864
Hot Water Trip (PN 16)	F	DN	100	100	125	125	125
Water Volume		lt	371	396	620	586	660
Anhydrous Weight		kg	945	985	1305	1385	1550
Safety Trip	S	inch	1 1/4”	1 1/4”	1 1/2”	1 1/2”	1 1/2”
Filling/Discharging	S1	inch	1”	1”	1”	1”	1”
Condensation Drain	C	inch	1”	1”	1”	1”	1”
Back Pressure		mbar	3.5	4.3	3.8	5.2	5.4
Operating Pressure		bar	4	4	4	4	4

TGY Series

Gas Fired Floor Type Self Condensing Boiler

TGY Series; Gas-fired floor type self-condensing steel body boilers are designed specifically for central heating systems having primary concern of business economy thanks to their high combustion efficiency and long service life. The highest operation temperatures at which TGY boilers reach the highest efficiency are the range of 50/30 ˚C. Condensation energy emerging in boiler third pass pipes are transfered to the system via titanium alloyed stainless steels pipes..

Features

- High combustion efficiency up to 105% (50/30 ˚C).
- All surfaces where condensation occurs contain 316 titanium alloyed stainless steel material.
- Special body design for discharging condensation water.
- Suitable for standard barrel burner use.
- Microprocessor control panel that acceptable control burner and pump system.
- Siemens Albatros series model control panels offering comfort and economy together. (Optional)
- Water cooled cover system.
- Standard operating pressure of 4 bars.
- Full cylindrical boiler body.
- Body shell coated with electrostatic power paint on deposit sheet.
- Minimum wait losses with 80 mm thick mineral-based insulation on body and front cover.
- Production opportunity up to 8 bar on request.
- On-site manufacturing facilities.
- 3.1 certificated boiler tube compatible with 10217-2 norm.
- Compliance with national and international norms.

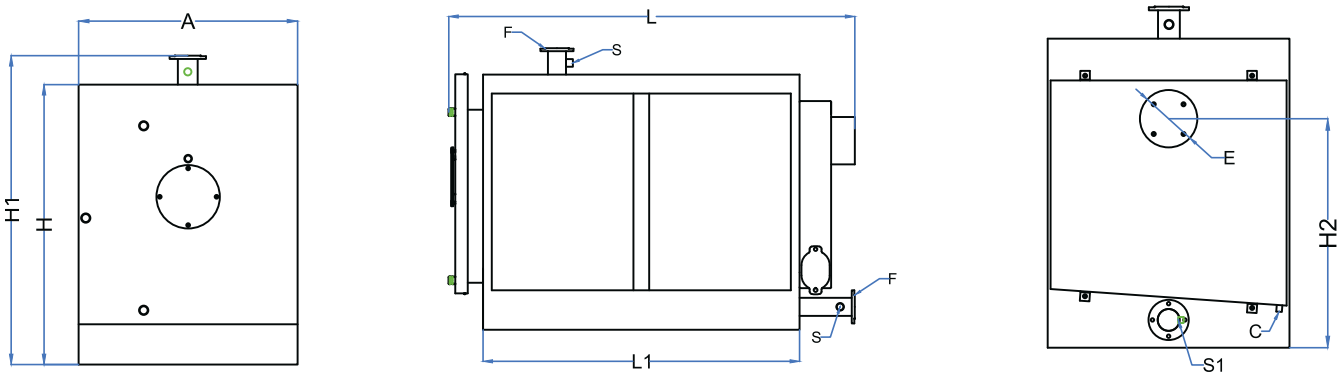

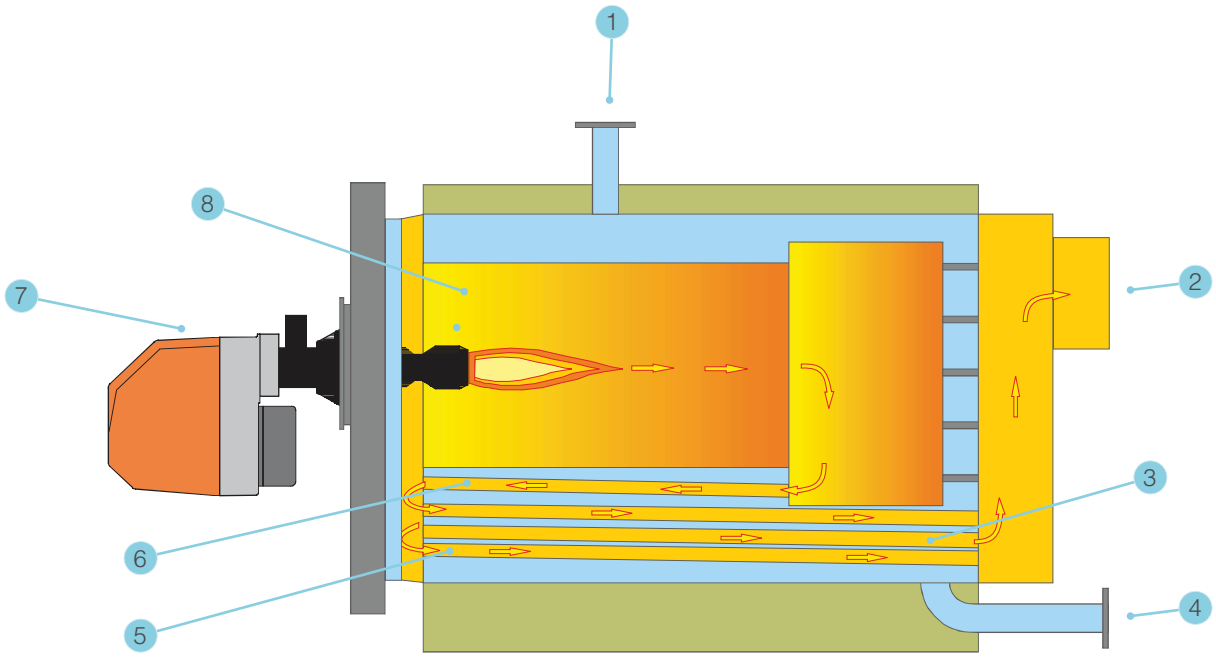

1	Installation Inlet Flange
2	Chimney Outlet
3	Condensation Level
4	Installation Return Flange
5	Smoke Pipe (3rd Pass)
6	Smoke Pipe (2nd Pass)
7	Burner
8	Burning Room (1st Pass)

TGY TECHNICAL SPECIFICATIONS							
Model			TGY 200	TGY 250	TGY 300	TGY 350	TGY 400
Capacity		kcal/h	200.000	250.000	300.000	350.000	400.000
		kW	232	290	348	406	464
Weight	A	mm	1144	1144	1196	1196	1256
Height	H	mm	1248	1248	1340	1340	1451
Height	H1	mm	1425	1425	1519	1519	1630
Length	L	mm	1981	2051	2208	2438	2321
Foot Length	L1	mm	1414	1484	1641	1871	1754
Chimney Diameter	E	mm	300	300	300	300	300
Chimney Height	H2	mm	960	960	1057	1057	1146
Hot Water Trip (PN 16)	F	DN	65	65	65	80	80
Water Volume		lt	630	677	840	960	953
Anhydrous Weight		kg	1090	1150	1275	1380	1555
Safety Trip	S	inch	1 1/4”	1 1/4”	1 1/4”	1 1/4”	1 1/4”
Filling/Discharging	S1	inch	1/2”	1/2”	1/2”	1”	1”
Condensation Drain	C	inch	1”	1”	1”	1”	1”
Back Pressure		mbar	3.9	4.1	4.2	4.4	4.6
Operating Pressure		bar	4	4	4	4	4
Flue Gas Temperature		˚C	78	76	76	78	78

TGY TECHNICAL SPECIFICATIONS							
Model			TGY 450	TGY 500	TGY 600	TGY 700	TGY 860
Capacity		kcal/h	450.000	500.000	600.000	700.000	860.000
		kW	522	580	696	812	1000
Weight	A	mm	1265	1265	1446	1500	1510
Height	H	mm	1451	1451	1654	1738	1716
Height	H1	mm	1630	1630	1839	1919	1897
Length	L	mm	2421	2551	2497	2632	2887
Foot Length	L1	mm	1854	1984	1930	2065	2320
Chimney Diameter	E	mm	300	300	350	350	350
Chimney Height	H2	mm	1146	1146	1349	1411	1411
Hot Water Trip (PN 16)	F	DN	100	100	125	125	125
Water Volume		lt	1014	1103	1470	1695	1958
Anhydrous Weight		kg	1610	1725	2070	2300	2550
Safety Trip	S	inch	1 1/4”	1 1/4”	1 1/2”	1 1/2”	1 1/2”
Filling/Discharging	S1	inch	1”	1”	1”	1”	1”
Condensation Drain	C	inch	1”	1”	1”	1”	1”
Back Pressure		mbar	4.7	4.2	4.3	4.2	4.4
Operating Pressure		bar	4	4	4	4	4
Flue Gas Temperature		˚C	75	79	85	88	89

TGTY Series

Gas Fired Floor Type Full Condensing Boiler

TGTY Series; Gas-fired floor type fully condensing steel body boilers are designed specifically for central heating systems having primary concern of business economy thanks to their high combustion efficiency and long service life.

The highest operation temperatures at which TGTY boilers reach the highest efficiency are the range of 50/30 ˚C. The highest operation temperatures at which TGTY boilers reach the highest efficiency are the range of 50/30 ˚C.

Features

- High combustion efficiency up to 108% (50/30 ˚C).
- All surfaces where condensation occurs contain 316 titanium alloyed stainless steel material.
- Suitable for standard barrel burner use.
- Microprocessor control panel that acceptable control burner and pump system.
- Siemens Albatros series model control panels offering comfort and economy together. (Optional)
- Water cooled cover system.
- Standard operating pressure 4 bars.
- Full cylindrical boiler body.
- Body shell coated with electrostatic power paint on deposit sheet.
- 80 mm thick mineral-based insulation on body and front cover.
- On-site manufacturing facilities.
- Environmentalist design with low chimney gas emissions.
- Compliance with national and international norms.

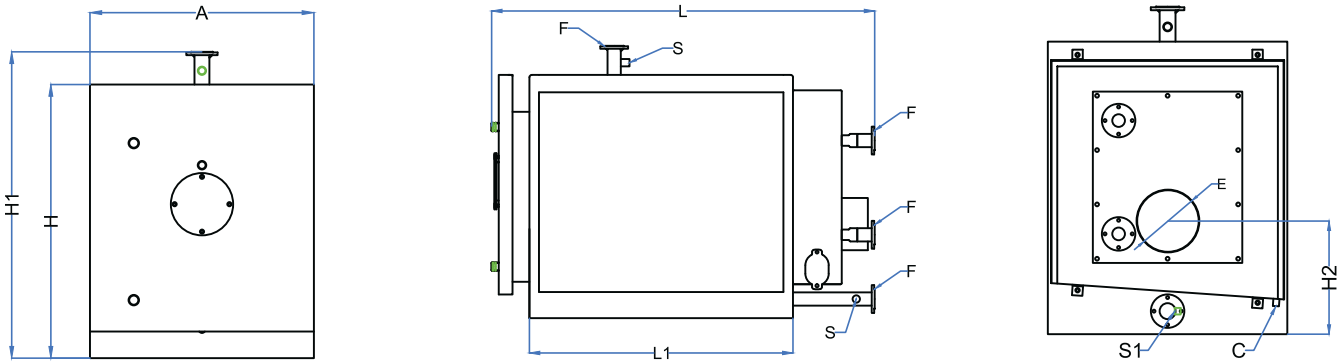

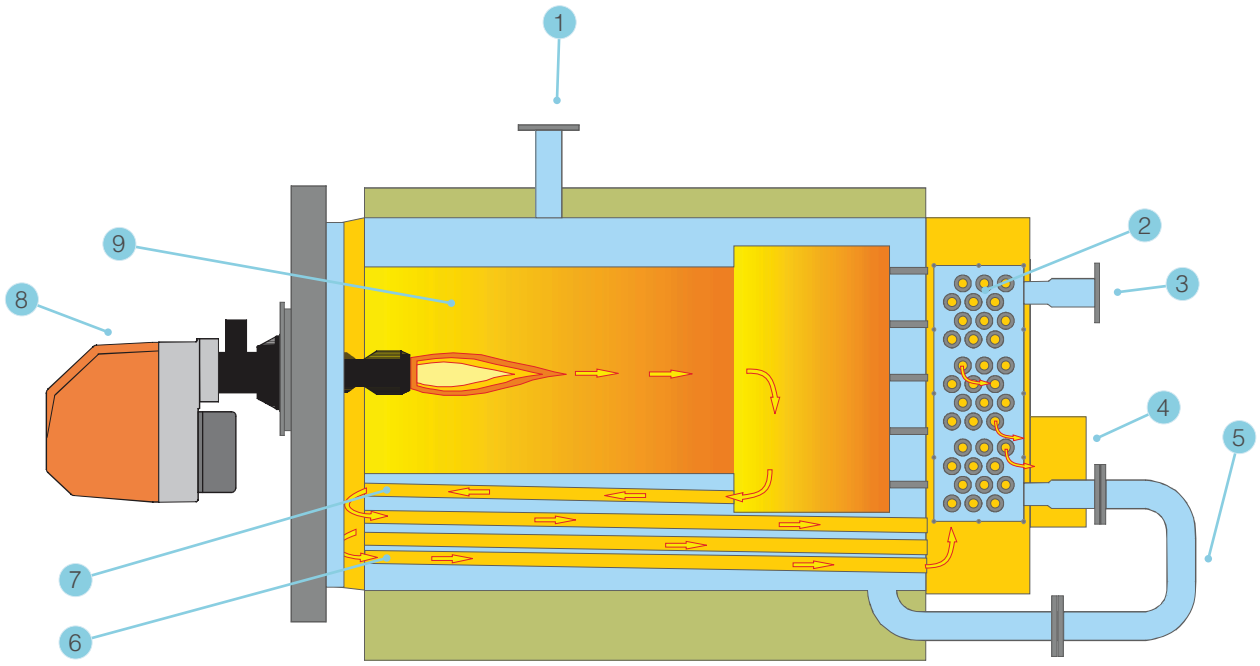

1	Installation Inlet Flange
2	Condensation Level
3	Installation Return Flange
4	Chimney Outlet
5	Installation Return Connection
6	Smoke Pipe (3rd Pass)
7	Smoke Pipe (2nd Pass)
8	Burner
9	Burning Room (1st Pass)

TGTY TECHNICAL SPECIFICATIONS							
Model			TGTY 200	TGTY 250	TGTY 300	TGTY 350	TGTY 400
Capacity		kcal/h	200.000	250.000	300.000	350.000	400.000
		kW	232	290	348	406	464
Weight	A	mm	1144	1144	1196	1196	1256
Height	H	mm	1248	1248	1340	1340	1451
Height	H1	mm	1425	1425	1519	1519	1630
Length	L	mm	2100	2175	2359	2589	2542
Foot Length	L1	mm	1414	1484	1641	1871	1754
Chimney Diameter	E	mm	300	300	300	300	300
Chimney Height	H2	mm	477	477	577	560	656
Hot Water Trip (PN 16)	F	DN	65	65	65	80	80
Water Volume		lt	630	677	840	960	953
Anhydrous Weight		kg	1210	1265	1440	1555	1730
Safety Trip	S	inch	1 1/4”	1 1/4”	1 1/4”	1 1/4”	1 1/4”
Filling/Discharging	S1	inch	1/2”	1/2”	1/2”	1”	1”
Condensation Drain	C	inch	1”	1”	1”	1”	1”
Back Pressure		mbar	3.9	4.1	4.2	4.4	4.6
Operating Pressure		bar	4	4	4	4	4
Flue Gas Temperature		˚C	54	51	53	48	49

TGTY TECHNICAL SPECIFICATIONS							
Model			TGTY 450	TGTY 500	TGTY 600	TGTY 700	TGTY 860
Capacity		kcal/h	450.000	500.000	600.000	700.000	860.000
		kW	522	580	696	812	1000
Weight	A	mm	1265	1265	1446	1500	1510
Height	H	mm	1451	1451	1654	1738	1716
Height	H1	mm	1630	1630	1839	1919	1897
Length	L	mm	2642	2772	2724	2884	3052
Foot Length	L1	mm	1854	1984	1930	2065	2320
Chimney Diameter	E	mm	300	300	350	350	350
Chimney Height	H2	mm	656	656	720	867	710
Hot Water Trip (PN 16)	F	DN	100	100	125	125	125
Water Volume		lt	1014	1103	1470	1695	1958
Anhydrous Weight		kg	1785	1900	2355	2620	2905
Safety Trip	S	inch	1 1/4”	1 1/4”	1 1/2”	1 1/2”	1 1/2”
Filling/Discharging	S1	inch	1”	1”	1”	1”	1”
Condensation Drain	C	inch	1”	1”	1”	1”	1”
Back Pressure		mbar	4.7	4.2	4.3	4.2	4.4
Operating Pressure		bar	4	4	4	4	4
Flue Gas Temperature		˚C	51	48	53	52	47

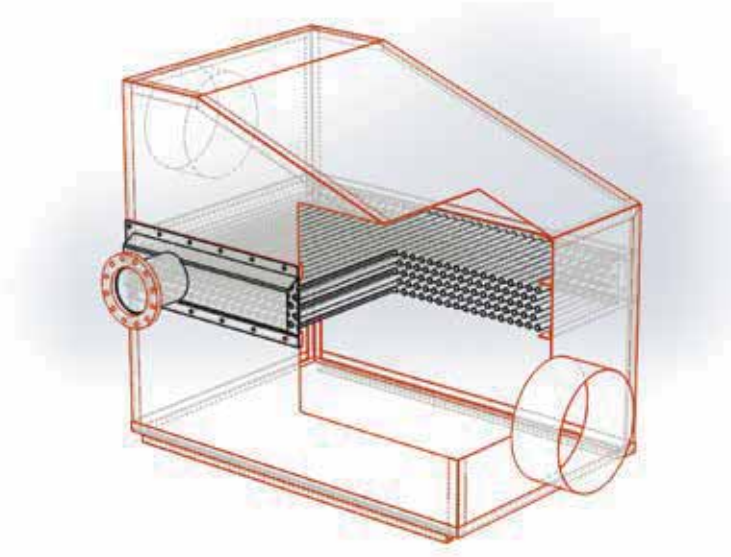

Condensing Stainless Economizer

What is an Economizer?

In today's competitive conditions where energy costs have gained importance, consumers look for way to use energy both efficiently and economically. This quest makes the energy economy a need and obligation.

The economizer is an overall name given to energy-saving systems used in the preheating of fluids to reduce energy consumption and to save energy.

Why Should Economizer Be Used?

When economizer is added to the system, amount of investment per produced unit heat energy will be reduced. Since economizer lowers the chimney temperature, unnecessary hot smoke gas within the chimney is cooled and discharged.

In this way, loss of efficiency resulting from an increase in air surplus coefficient can be recovered at a significant level.

How It Works?

Boiler feeding water is heated with smoke gases within the economizer system before entering into actual heating surfaces of the boiler. In this way, since the temperature difference between water sent to the boiler and the water being heated is reduced, discharging of gases in water is facilitated and thermal efficiency increases. Especially, this system, recommended when natural gas is used as fuel, is also environmentally friendly product.

Features

- Compatible with all gas-fired boiler models within the capacity range of 200,000 kcal/h to 5,000,000 kcal/h.
- Production in two separate models that are mounted of boilers (internal) or that can be mounted. they were at boiler chimney outlet (external).
- Compatible with all brand and model gas-fired boilers.
- An average of 5% to 10% efficiency increase in systems used.
- The whole body is covered with 80-mm thick mineral-based insulation material.
- All surfaces where condensation occurs 316 titanium alloy stainless steel material.
- Special body design for discharging condensation water.
- High efficiency heat transfer surface thanks to finned pipes.

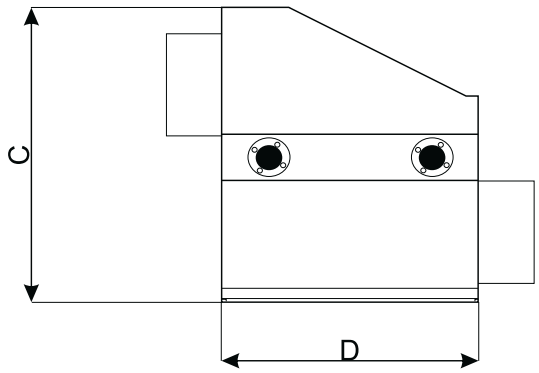

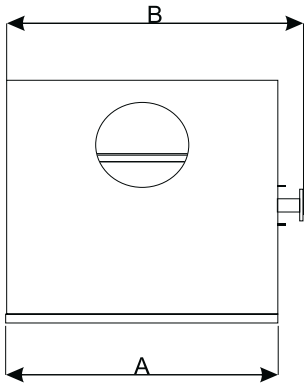

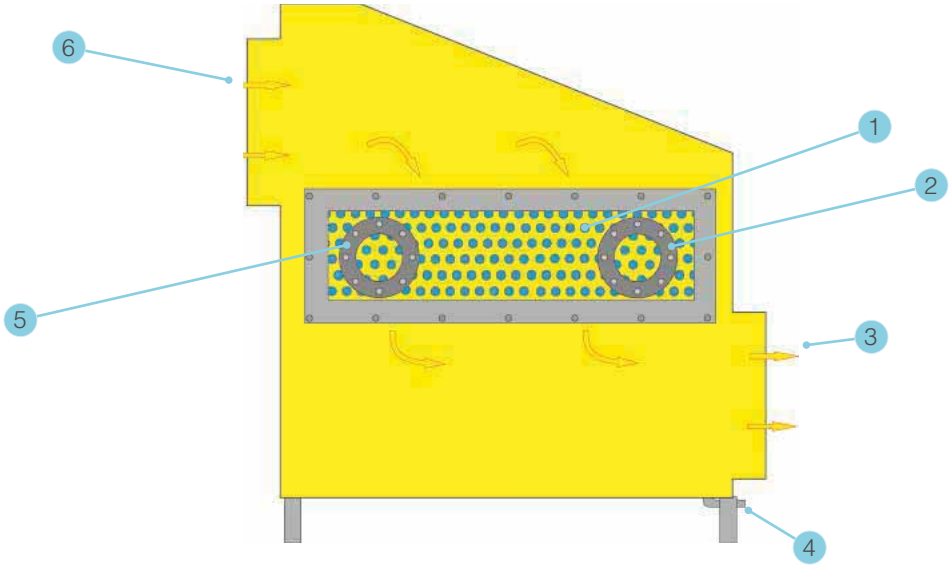

1	Stainless Finned Pipes (316 Ti)
2	Installation Return Flange
3	Chimney Outlet
4	Condensation Drain
5	Installation Inlet Flange (Boiler Connection)
6	Chimney Input (Boiler Output)

ECONOMIZER CAPACITY TABLE									
Model			ME 400	ME 450	ME 500	ME 600	ME 700	ME 800	ME 900
Economizer			EKO 400	EKO 450	EKO 500	EKO 600	EKO 700	EKO 800	EKO 900
Flue Gas	Boiler Operation Temperature (˚C)	Capacity							
200 ˚C	80 - 60	kcal/h	29.000	32.000	36.000	45.000	52.500	59.000	67.000
		kWh	34	37	42	52	61	68	78
	70 - 50	kcal/h	32.000	35.000	38.000	47.000	53.000	61.000	68.000
		kWh	37	41	44	55	61	71	79

ECONOMIZER CAPACITY TABLE									
Model			ME 1000	ME 1250	ME 1500	ME 1750	ME 2000	ME 2500	ME 3000
Economizer			EKO 1000	EKO 1250	EKO 1500	EKO 1750	EKO 2000	EKO 2500	EKO 3000
Flue Gas	Boiler Operation Temperature (˚C)	Capacity							
200 ˚C	80 - 60	kcal/h	75.000	93.500	112.000	131.000	148.000	184.000	223.000
		kWh	87	108	130	152	172	213	259
	70 - 50	kcal/h	77.000	94.500	113.500	133.000	150.000	187.000	225.000
		kWh	89	110	132	154	174	217	261

MIT Fuel Oil Tank

Cylindirical Convex Fuel Oil Tank

MIT fuel oil tanks are used for the safe storage of petroleum derivative fuels such as fuel-oil, diesel and lubricants.

In the heating systems where fuel-oil fuel is used and in industrial facilities, the serpentines of the manufactured devices, including the heater serpentine, are manufactured from the 10217-2 boiler pipe (PN 6). The heater effect is increased by covering the heater pipe with a sheet cover. The heater is suitable for use in hot water and steam as a fluid.

Over time, the debris accumulated at the bottom of the tank, water, sediment and bottom mud may block filters and cause blockages of the fuel roads in the later times. There are manhole caps on the top and front of the appliance to be used for cleaning such problems.

Tanks made of St-37 quality material as cylindrical and convex It can be produced in two separate models, underground and above, in material thicknesses determined by the TSE standards.

The tank coil and its body are subjected to required pressure tests and controls. The devices produced in conjunction with the carrier stand are painted with two layers of anti-rust paint on demand.

Produced by designing according to TS EN 12285-2 standards.

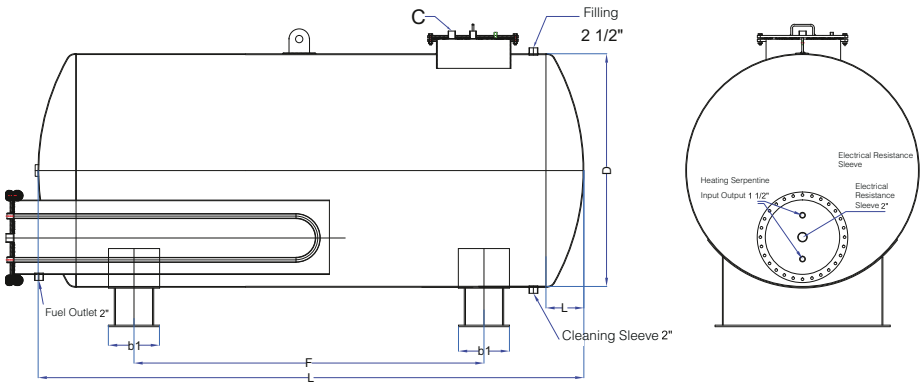

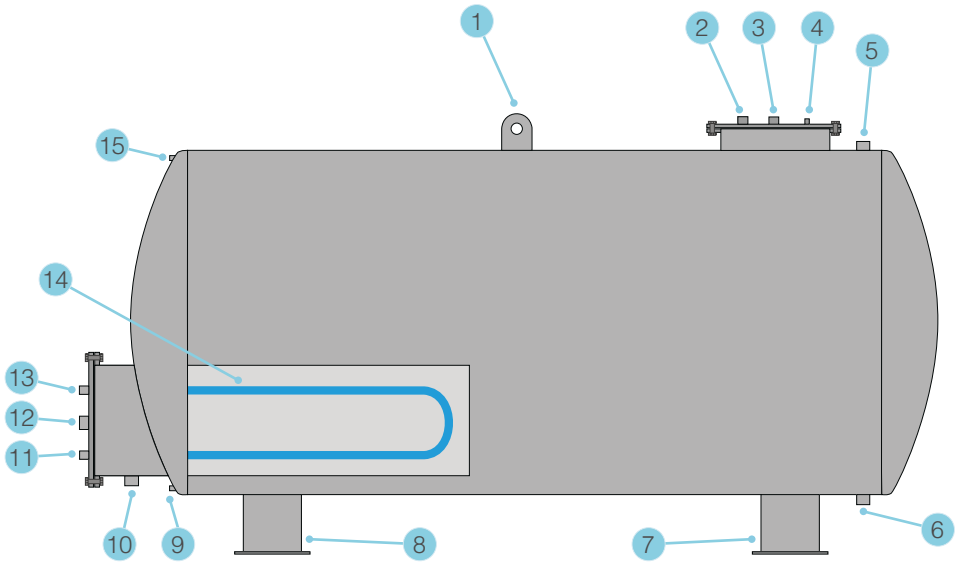

1	Bearing Eyebolt	9	Indicator Sleeve
2	Ring Ling Sleeve	10	Fuel Exit
3	Indicator Sleeve	11	Heating Serpentine Exit
4	Air Vent	12	Electrical Heating Entry
5	Filling Sleeve	13	Heating Serpentine Input
6	Cleaning Sleeve	14	Heating Serpentine
7	Carrier Foot	15	Indicator Sleeve
8	Carrier Foot		

MAT TECHNICAL SPECIFICATIONS										
Model	Capacity (lt)	Size (mm)					Vent Hole (C)	Outer Surface m^2	Weight Without Heater (kg)	Weight With Heater (kg)
		Dia (D)	Length (L)	Camber Depth (T)	Foot Width (B)1	Foot Axis Range (F)				
MAT-1	1.000	1000	1510	180	350		1 1/2”	6	263	313
MAT-3	3.000	1250	2740	220	350		1 1/2”	12.7	525	575
MAT-5	5.000	1600	2820	260	350	1170	1 1/2”	16	740	790
MAT-7	7.000	1600	3740	260	350	2270	1 1/2”	22.8	930	980
MAT-10	10.000	1600	5350	260	350	4290	1 1/2”	30.5	1250	1300
MAT-13	13.000	1600	6960	260	525	5625	1 1/2”	38.5	1550	1660
MAT-16	16.000	1600	8570	260	525	7135	1 1/2”	45.7	1850	1900
MAT-20	20.000	2000	6960	320	600	5395	1 1/2”	49	2400	2450
MAT-25	25.000	2000	8540	320	600	7005	1 1/2”	60	2850	2900
MAT-30	30.000	2000	10120	320	600	8615	1 1/2”	68.5	3400	3450
MAT-40	40.000	2500	8800	400	950	6760	2”	77.8	4400	4450
MAT-50	50.000	2500	10800	400	950	8820	2”	93.9	5300	5350
MAT-60	60.000	2500	12800	400	950	10880	2”	108	6300	6350

EKİN ENDÜSTRİYEL

STEAM GENERATORS

ENERGY SYSTEMS

Teachnical Features

- Mitrojen Steam Generators are produced and tooled with high technology.
- Steam is produced economical and faster
- Usage is very easy by the virtue of full automation controlling (PLC).
- Feed water pump is specially designed and produced for steam generators, by the way it is designed for getting pure steam.
- It is also possible to get pure steam whereby special coupled separator.
- Water Treatment System is full automatic.
- It is designed for worst possible conditions, and it is equipped with extraordinary safety chains.
- By the way, there is no need for extra equipment for working it.
- It is delivered with all armatures (burner -according to your selection- is included).
- It is installed by our expert engineers and technicians.
- It is possible to use it in mediums where exist human because of lower water volume.
- It is possible to always watch steam temperature, chimney gas temperature, and all functions from the advanced automation unit.

Steam Accumulated's Steam Domes

Mitrojen Steam Generators are equipped with steam dom with considering of rapid steam tractions. Thus, rapid heat fluctuations and, often "start-stop" process is prevented by increasing of the "start-stop" time of the burner. Also, while the maintenance times are extended, the maximum fuel economy is maintained.

Mitrojen Steam domes, are developed as steam accumulated domes, so, when the steam in the dome is started to use, the water (which is in the dome in the time of the burner's start) in the degree of vaporization, meets the need of instant steam need. In the less usage, the need of steam is met without the operation of the burner.

PLC Control Panel

Mitrojen Steam Generators Area Of Use and Features

Hotels, confection, laundries, tricot manufacturing, dairy, canning, concrete curing, beverage bottling industry, wash and clean with steam, sock industry, pharmaceutical, chemistry, paint industry and any place you need steam. It becomes ready for operation when electricity connection chimney connection, water supplies, and fuel supplies connected. It is a complete package unit with all equipment and transportation and installation is extremely convenient.

Mitrojen steam generators are able to installed in different requirements regarding to usage area. Therefore, it is possible to adapt it into your current location (dimensions are not important).

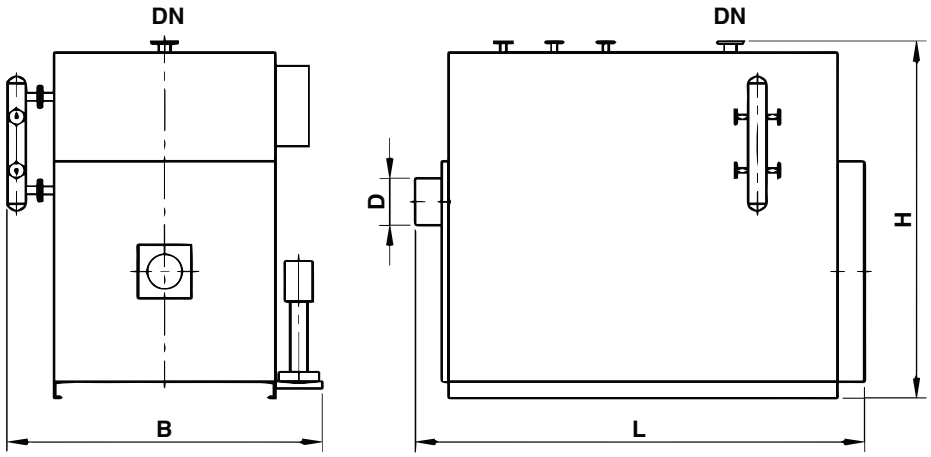

mitrojen

Capacities and Main Dimensions

Type	Steam Flow Rate	Heat Capacity		Working Pressure	Dimensions				Steam Outlet (For 6 Bar)	Approx. Weight (For 6 Bar)
	(kg/h)	(kcal/h)	(kW)	(bar)	B (mm)	L (mm)	H (mm)	D (mm)	DN	(kG)
MITRO 50	50	30,000	35	6-8-10-12	1320	1290	1500	220	DN 20	530
MITRO 100	100	60,000	70	6-8-10-12	1320	1440	1500	220	DN 20	600
MITRO 150	150	90,000	105	6-8-10-12	1320	1440	1500	220	DN 25	630
MITRO 200	200	120,000	140	6-8-10-12	1470	1590	1650	250	DN 25	860
MITRO 250	250	150,000	174	6-8-10-12	1470	1590	1650	250	DN 25	880
MITRO 300	300	180,000	209	6-8-10-12	1520	1840	1650	250	DN 32	1000
MITRO 400	400	240,000	279	6-8-10-12	1520	1840	1650	250	DN 32	1030
MITRO 500	500	300,000	349	6-8-10-12	1550	2090	1800	300	DN 40	1260
MITRO 600	600	360,000	419	6-8-10-12	1550	2090	1800	300	DN 50	1290
MITRO 700	700	420,000	488	6-8-10-12	1770	2340	2080	300	DN 50	1890
MITRO 750	750	450,000	523	6-8-10-12	1770	2340	2080	300	DN 50	1930
MITRO 800	800	480,000	558	6-8-10-12	1770	2340	2080	300	DN 50	1960
MITRO 1000	1000	600,000	698	6-8-10-12	2100	2730	2450	350	DN 65	3230
MITRO 1250	1250	750,000	872	6-8-10-12	2100	2860	2450	350	DN 65	3350
MITRO 1500	1500	900,000	1047	6-8-10-12	2320	3060	2700	350	DN 65	4550
MITRO 2000	2000	1.200.000	1395	6-8-10-12	2350	3280	2700	350	DN 80	4950
MITRO 2500	2500	1.500.000	1744	6-8-10-12	2400	3700	2800	350	DN 80	6050
MITRO 3000	3000	1.800.000	2093	6-8-10-12	2450	3750	2900	450	DN 100	6300
MITRO 3500	3500	2.100.000	2442	6-8-10-12	2550	4170	3000	450	DN 100	7500
MITRO 4000	4000	2.400.000	2791	6-8-10-12	2700	4500	3100	550	DN 125	8800
MITRO 5000	5000	3.000.000	3488	6-8-10-12	2700	4770	3100	550	DN 125	10700

We reserve the right to make changes.

Optional Mitrojen Economizer Application

Mitrojen economizers utilize the waste heat of flue gases to heat the feed water in the steam generators, thereby improving the fuel economy and thus the efficiency of the generator.

Optional Mitrojen Deaerator Application

Oxygen and carbon dioxide gases, which are dissolved in the feed water in the steam systems, cause corrosion in the form of pores and melts on the metal surfaces in the steam system.
These dissolved gases in the Mitrojen deaerator are automatically thrown out and thus the system is under protection. Feed water is heated to 102 °C in the deaerator. By keeping the feed water at 102 °C, oxygen and carbon dioxide are removed and in the steam generators has heat fluctuation is prevented and 3% to 5% fuel saving is ensured.

EKİN ENDÜSTRİYEL

SOLAR
COLLECTORS

ENERGY SYSTEMS

Solar Thermal Collectors

INNSUN solar collectors; are the hot water sources that have high efficiency and specific surface area. They are used for heating the water as absorbing the energy from sunshine.

INNSUN solar collectors, are used for meet the hot water requirements of houses, villas, hotels, buildings, restaurants, hospitals, swiming pools and many industrial areas like factories.

INNSUN solar collectors, which are all domestic production, provide maximum energy efficiency by means of solar technologies with their production technologies and high material quality.

Advantages

- High energy efficiency.
- Energy-saving.
- Easy assembling compact system
- Eco-friendly
- Individuality in the hot water needs.
- Low maintenance costs.

Innsun High

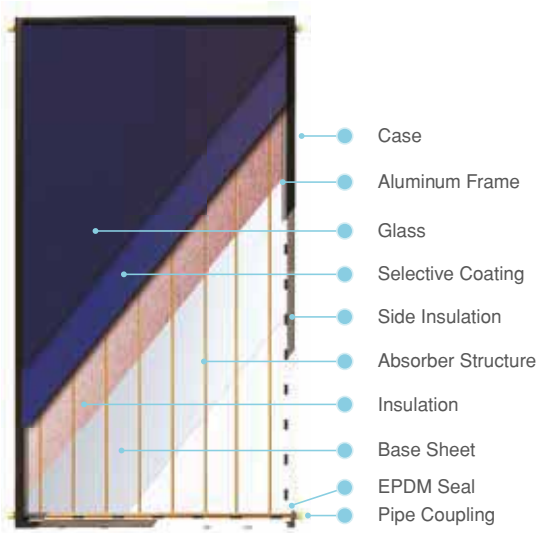

Solar Keymark certified
Almeco - Tinox highly selective aluminum
Rock wool insulation Copper pipe
Low iron tempered glass Laser welding

TECHNICAL SPECIFICATIONS					
		Unit	High 2510	High 2108	High 1808
Technical Data	Dimensions	mm	1988x1218x90	1988x1041x90	1927x927x90
	Casing		Electrostatic Painted Aluminum Case	Electrostatic Painted Aluminum Case	Electrostatic Painted Aluminum Case
	Weight	kg	44	37,2	34
	Gross Area	m^2	2,42	2,07	1,79
	Aperture Area	m^2	2,24	1,92	1,62
Copper Tubes	Heat Carrier Volume	lt	1,27	1,07	1
	Dıameter Of Absorber Tube / Header Tube	mm	8 / 18	8 / 18	8 / 18
	Number Of Tubes		10	9	8
Absorber	Absorber Material		Almeco - Tinox Highly Selective Aluminum	Almeco - Tinox Highly Selective Aluminum	Almeco - Tinox Highly Selective Aluminum
	Absorptance / Emittance		%95 / %4	%95 / %4	%95 / %4
	Welding Method		Laser Welding	Laser Welding	Laser Welding
Insulation	Insulation Material		Rock Wool	Rock Wool	Rock Wool
	Density / Thickness	(kg/m^3) / (mm)	50 / 40	50 / 40	50 / 40
Glass	Glass Material		Low Iron Tempered Glass	Low Iron Tempered Glass	Low Iron Tempered Glass
	Thickness Of Glass	mm	4	4	4
Maximum Rating	Stagnation Temperature	°C	194,5	194,5	194,5
	Maximum Operation Pressure	bar	8,6	8,6	8,6
	Nominal Flow Rate	lt/h	120	105	100
	Back Sheeting		Embossed - Finished - Aluminum Sheet	Embossed - Finished - Aluminum Sheet	Embossed - Finished - Aluminum Sheet
	Mounting Type		In Roof - On Roof - Flat Roof	In Roof - On Roof - Flat Roof	In Roof - On Roof - Flat Roof

Innsun Pro

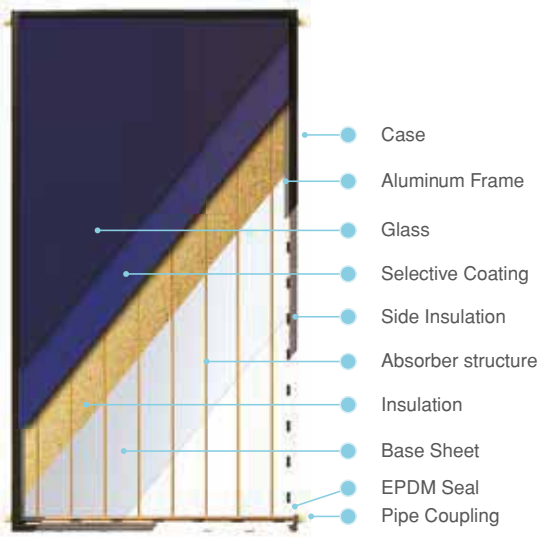

Solar Keymark certified
Almeco - Tinox highly selective aluminum
Copper pipe Glass wool insulationNormal
iron tempered glass Laser welding

TECHNICAL SPECIFICATIONS					
		Unit	Pro 2510	Pro 2108	Pro 1808
Technical Data	Dimensions	mm	1988x1218x90	1988x1041x90	1927x927x90
	Casing		Electrostatic Painted Aluminum Case	Electrostatic Painted Aluminum Case	Electrostatic Painted Aluminum Case
	Weight	kg	44	37,2	34
	Gross Area	m^2	2,42	2,07	1,79
	Aperture Area	m^2	2,24	1,92	1,62
Copper Tubes	Heat Carrier Volume	lt	1,27	1,07	1
	Diameter Of Absorber Tube / Header Tube	mm	8 / 18	8 / 18	8 / 18
	Number Of Tubes		10	9	8
Absorber	Absorber Material		Almeco - Tinox Highly Selective Aluminum	Almeco - Tinox Highly Selective Aluminum	Almeco - Tinox Highly Selective Aluminum
	Absorptance / Emittance		%95 / %3	%95 / %3	%95 / %3
	Welding Method		Laser Welding	Laser Welding	Laser Welding
Insulation	Insulation Material		Glass Wool	Glass Wool	Glass Wool
	Density / Thickness	(kg/m^3) / (mm)	14 / 50	14 / 50	14 / 50
Glass	Glass Material		Normal Iron Tempered Glass	Normal Iron Tempered Glass	Normal Iron Tempered Glass
	Thickness Of Glass	mm	4	4	4
Maximum Rating	Stagnation Temperature	°C	190	190	190
	Maximum Operation Pressure	bar	8,6	8,6	8,6
	Nominal Flow Rate	lt/h	120	105	100
	Back Sheeting		Embossed - Finished - Aluminum Sheet	Embossed - Finished - Aluminum Sheet	Embossed - Finished - Aluminum Sheet
	Mounting Type		In Roof - On Roof - Flat Roof	In Roof - On Roof - Flat Roof	In Roof - On Roof - Flat Roof

Innsun Pro Serpentine

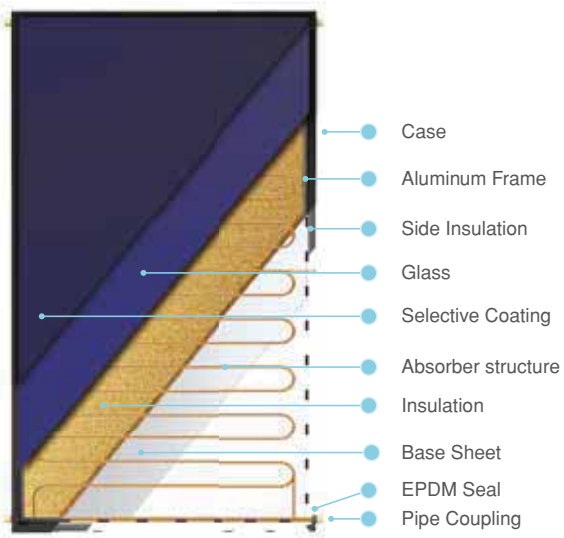

Solar Keymark certified
Almeco - Tinox highly selective aluminum
Rock wool insulation Copper pipe
Low iron tempered glass Laser welding

TECHNICAL SPECIFICATIONS				
		Unit	Pro 2510 Coil	Pro-H 2510 Coil
Technical Data	Dimensions	mm	1988x1218x90	1988x1218x90
	Casing		Electrostatic Painted Aluminum Case	Electrostatic Painted Aluminum Case
	Weight	kg	44	44
	Gross Area	m^2	2,42	2,42
	Aperture Area	m^2	2,24	2,24
Copper Tubes	Heat Carrier Volume	lt	1,27	1,27
	Diameter Of Absorber Tube / Header Tube	mm	8 / 18	8 / 18
	Number Of Tubes		1	1
Absorber	Absorber Material		Almeco - Highly Selective Aluminum	Almeco - Tinox Highly Selective Aluminum
	Absorptance / Emittance		%95 / %3	%95 / %3
	Welding Method		Laser Welding	Laser Welding
Insulation	Insulation Material		Glass Wool	Rock Wool
	Density / Thickness	(kg/m^3) / (mm)	14 / 50	50 / 40
Glass	Glass Material		Normal Iron Tempered Glass	Low Iron Tempered Glass
	Thickness Of Glass	mm	4	4
Maximum Rating	Stagnation Temperature	°C	192	192
	Maximum Operation Pressure	bar	8,6	8,6
	Nominal Flow Rate	lt/h	120	120
	Back Sheeting		Embossed - Finished - Aluminum Sheet	Embossed - Finished - Aluminum Sheet
	Mounting Type		In Roof - On Roof - Flat Roof	In Roof - On Roof - Flat Roof

Innsun Pro Horizontal

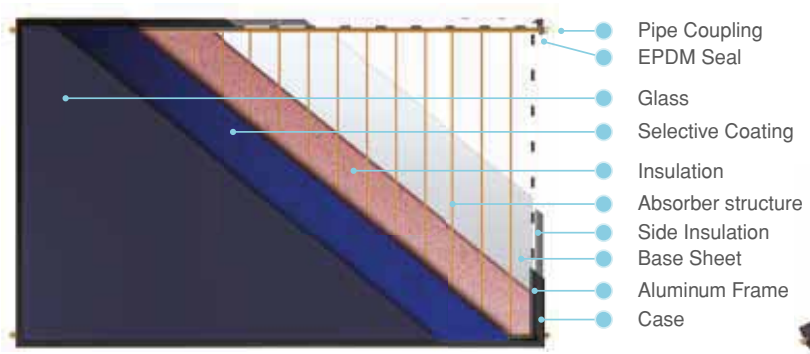

Almeco - Tinox highly selective aluminum
Rock wool insulation Copper pipe
Low iron tempered glass
Laser Welding Horizontal system

TECHNICAL SPECIFICATIONS				
		Unit	Pro 2510 Horizontal	Pro 2108 Horizontal
Technical Data	Dimensions	mm	1218x1988x90	1041x1988x90
	Casing		Electrostatic Painted Aluminum Case	Electrostatic Painted Aluminum Case
	Weight	kg	44	37,2
	Gross Area	m^2	2,42	2,07
	Aperture Area	m^2	2,24	1,92
Copper Tubes	Heat Carrier Volume	lt	1,88	1,6
	Diameter Of Absorber Tube / Header Tube	mm	8 / 18	8 / 18
	Number Of Tubes		17	17
Absorber	Absorber Material		Almeco - Highly Selective Aluminum	Almeco - Tinox Highly Selective Aluminum
	Absorptance / Emittance		%95 / %3	95% / 3%
	Welding Method		Ultrasonic Welding	Ultrasonic Welding
Insulation	Insulation Material		Rock Wool	Rock Wool
	Density / Thickness	(kg/m^3) / (mm)	50 / 40	50 / 40
Glass	Glass Material		Low Iron Tempered Glass	Low Iron Tempered Glass
	Thickness Of Glass	mm	4	4
Maximum Rating	Stagnation Temperature	°C	232	232
	Maximum Operation Pressure	bar	8,6	8,6
	Nominal Flow Rate	lt/h	105	105
	Back Sheeting		Embossed - Finished - Aluminum Sheet	Embossed - Finished - Aluminum Sheet
	Mounting Type		In Roof - On Roof - Flat Roof	In Roof - On Roof - Flat Roof

Innsun C-High

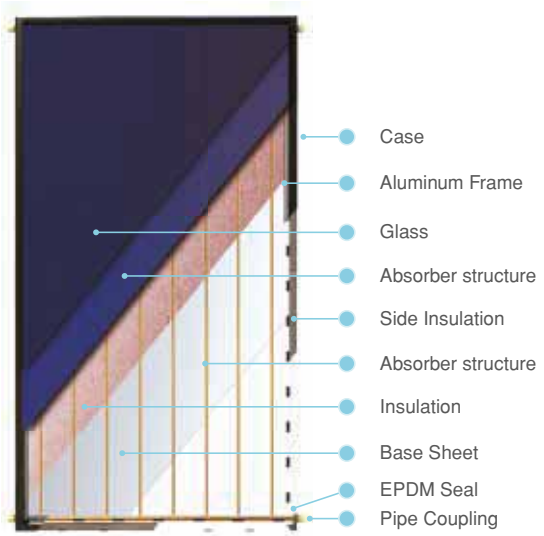

Solar Keymark certified
Almeco - Tinox highly selective copper
Rock wool insulation copper pipe
Low iron tempered glass Ultrasonic welding

TECHNICAL SPECIFICATIONS			
		Unit	C-High 2509
Technical Data	Dimensions	mm	2325x1041x90
	Casing		Electrostatic Painted Aluminum Case
	Weight	kg	44
	Gross Area	m^2	2,42
	Aperture Area	m^2	2,24
	Absorber Area	m^2	2,23
Copper Tubes	Heat Carrier Volume	lt	1,27
	Diameter Of Absorber Tube / Header Tube	mm	8 / 18
	Number Of Tubes		9
Absorber	Absorber Material		Almeco - Tinox Highly Selective Aluminum
	Absorptance / Emittance		%95 / %3
	Welding Method		Ultrasonic Welding
Insulation	Insulation Material		Rock Wool
	Density / Thickness	(kg/m^3) / (mm)	50 / 40
Glass	Glass Material		Low Iron Tempered Glass
	Thickness Of Glass	mm	4
Maximum Rating	Stagnation Temperature	°C	194,5
	Maximum Operation Pressure	bar	8,6
	Nominal Flow Rate	lt/h	120
	Back Sheeting		Embossed - Finished - Aluminum Sheet
	Mounting Type		In Roof - On Roof - Flat Roof

Thermosiphon Systems

INNSUN Thermosyphon Systems; is designed for the reason of protecting humans health with using stainless steel serpantines in tanks for domestic hot water applications

INNSUN thermosyphon systems all are compact and easy-assembling systems which already designed with particular engineering calculations.

INNSUN thermosyphon systems consist of a combination of collector and a tank which has AISI 316L stainless steel flexible tube heat exchanger.

The water that is heated in stainless pipes is shown us the most hygienic state of domestic water.

Advantages

- Hygienic.
- Compact system.
- Easy-assembling complete system
- Energy-saving.
- Individuality in the hot water needs.
- Lowmaintenance costs.
- High energy efficiency.
- Eco-friendly.

Innsun Box

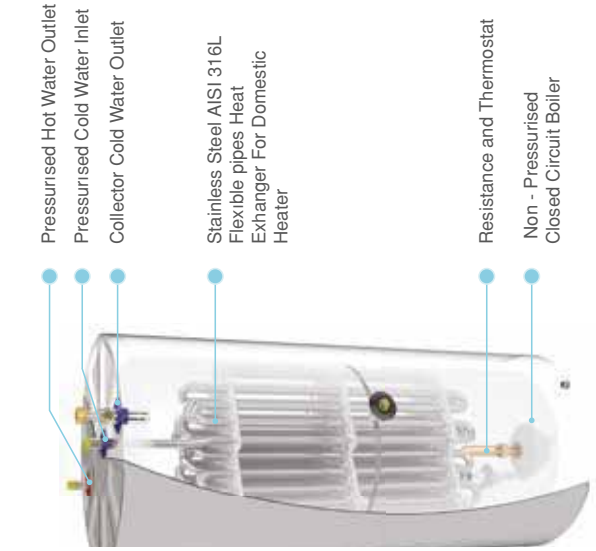

Solar Keymark certified
No need magnesium anode and maintenance Free
Unpressurized tank, pressurized water
Hidden tank behind panels
5 year warranty

TECHNICAL SPECIFICATIONS				
	Unit	Box 120	Box 200	Box 300
Capacity	lt/day	120	200	300
Tank Working Pressure	bar	0-3	0-3	0-3
Heat Exchanger Working Pressure	bar	2-5	2-5	2-5
Maximum Temperature	°C	95	95	95
Insulation		50 mm / 40 kg/m³ / Polyurethan Insulation (CFC Free)	50 mm / 40 kg/m³ / Polyurethan Insulation (CFC Free)	50 mm / 40 kg/m³ / Polyurethan Insulation (CFC Free)
Heat Exchanger		AISI 316 L Stainless Steel	AISI 316 L Stainless Steel	AISI 316L Stainless Steel
Boiler Final Dimensions (Length / Diameter)	mm	1115 / 540	1200 / 540	1725 / 540
Outer Cylinder Materials		Electrostatic Powder Painted ST 37 Steel	Electrostatic Powder Painted ST 37 Steel	Electrostatic Powder Painted ST 37 Steel
Boiler Net Weight	kg	45	65	82
		Pro 2108	Pro 2510	Pro 2108* (2 Pieces)
Dimensions	mm	1988x1041x90	1988x1218x90	1988x1041x90
Weight	kg	37,2	44	37,2
Gross Area	m²	2,07	2,42	2,07
Aperture Area	m²	1,92	2,24	1,92
Absorber Area	m²	1,89	2,23	1,89
Absorber Material		Black Aluminum	Black Aluminum	Black Aluminum
Welding Method		Laser Welding	Laser Welding	Laser Welding
Glass Material		Normal Iron Tempered Glass	Normal Iron Tempered Glass	Normal Iron Tempered Glass
Insulation Material		Glass Wool	Glass Wool	Glass Wool
Base Sheeting		Embossed - Finished - Aluminum Sheet	Embossed - Finished - Aluminum Sheet	Embossed - Finished - Aluminum Sheet

EKİN ENDÜSTRİYEL

CHILLERS

ENERGY SYSTEMS

General Descriptions

MIT-SG-T series R410a gas coolers are designed with a air cooled scroll compressor, internal tank and pump groups. MIT-SG-T series low energy consumption axial fans charged with environmentally friendly R410a gas, tropical type condensers with large heat transfer area and scroll compressors contribute to a more livable environment. It is used safely in every process designed with a closed circuit where cold water is required.

The MIT-SG-T series can also be used indoors with its particularly compact designs (when ventilation allows). In the plastic, rubber and metal industry mold cooling, hydraulic oils of hydraulic machines (plastic injection machines, hydraulic presses), extruder gearboxes, motors, etc., it provides cooling to processes such as pool cooling (with heat exchangers) with high stability and low energy consumption.

Model			MIT SG-131	MIT SG-191	MIT SG-221	MIT SG-261	MIT SG-281	MIT SG-331
Cooling	Cooling Capacity (1)	kW kcal/h	14,5 12,500	20,7 17,800	24,5 21,000	28,5 24,500	30,8 26,000	35,7 30,700
	Total Power Draw (1)	kW	2,5	3,2	3,9	4,5	5,0	5,8
	COP	-	5,80	6,40	6,20	6,30	6,10	6,10
Compressor	Cooling Circuit	n°	1	1	1	1	1	1
	Compressor Amount	n°	1	1	1	1	1	1
	Type	-	Hermetic Scroll					
	Capacity Control	n°	1	1	1	1	1	1
Evaporator	Type	-	Plate Type					Shell& Tube
	Pressure Loss	kPa	40	42	28	38	51	13
	Water Flow	m^3/h	3,0	4,0	5,0	6,0	6,0	7,0
Electrical Properties	Mainline	V-phz-Hz	380 / 3 / 50					
	Rated Amperage	A	5,1	6,2	7,1	8,4	9,5	10,8
	Max. Amperage	A	8,6	11,0	12,9	15,0	16,0	18,8
	Protection Grade	-	IPS4	IPS4	IPS4	IPS4	IPS4	IPS4
Fan	Fan	n°	1	1	1	1	1	1
	Air Flow	m^3/h	9,750	9,750	9,750	12,600	12,600	25,260
	Sound Pressure Levels (2)	dB(A)	41	41	44	45	45	44
Hydraulic	Pump Rated Power	Hp	1,5	1,5	1,5	1,5	1,5	1,5
	Water Tank	lt	100	100	100	100	100	220
	Connector Dimensions	inç	1”	1”	1”	1”	1”	2”
Dimensions	Length	mm	1270	1270	1270	1270	1270	1820
	Width	mm	810	810	810	810	810	1000
	Height	mm	1775	1775	1775	1775	1775	1870
Weight	Loading Weight	kg	270	270	275	360	390	405

The cooling capacity is calculated for 15 °C water output and 35 °C outdoor temperature conditions.

Technical Specifications

- Dryer for gas circuit.
- There are separate cooling elements for each cooling circuit.
- Co-aging function for compressors.
- Remote on/off.
- Protective metal grid for the condenser.
- All alarm parameters can be monitored on a single screen.
- Ability to check alarm history.
- Refrigerant gas that does not harm ozone layer.
- Low-high pressure switch (controls the system according to the compressor pressure values).
- Solenoid valve (electromagnetically controls the refrigerant flow).
- Expansion valve (thermal expansion valve working with heat exchange).
- Drier Filter (Drier filter, filters the refrigerant).
- Sight glass (Sight glass with humidity indicator).

Model			MIT SG-T-442	MIT SG-T-522	MIT SG-T-572	MIT SG-T-652	MIT SG-T-822
Cooling	Cooling Capacity (1)	kW kcal/h	49,2 42,300	57,6 49,500	62,1 53,400	72,1 62,00	90,8 78,000
	Total Power Draw (1)	kW	7,8	9,0	10,0	11,6	14,8
	COP	-	6,30	6,40	6,20	6,20	6,10
Compressor	Cooling Circuit	n°	1	1	1	1	1
	Compressor Amount	n°	2	2	2	2	2
	Type	-	Hermetic Scroll				
	Capacity Control	n°	2	2	2	2	2
Evaporator	Type	-	Shell&Tube				
	Pressure Loss	kPa	27	41	32	32	56
	Water Flow	m^3/h	10,0	13,0	13,0	15,0	18,0
Electrical Properties	Mainline	V-phz-Hz	380 / 3 / 50				
	Rated Amperage	A	14,2	16,8	19,0	21,6	26,4
	Max. Amperage	A	25,8	30,0	32,0	37,6	42,0
	Protection Grade	-	IPS4	IPS4	IPS4	IPS4	IPS4
Fan	Fan	n°	2	3	3	3	3
	Air Flow	m^3/h	26,260	37,800	37,800	37,800	37,800
	Sound Pressure Levels (2)	dB(A)	47	47	55	55	56
Hydraulic	Pump Rated Power	Hp	1,5	3	3	4	4
	Water Tank	lt	220	245	256	256	321
	Connector Dimensions	inç	2”	2”	2”	2”	2 1/2”
Dimensions	Length	mm	1820	2610	2610	2610	2610
	Width	mm	1000	1180	1180	1180	1180
	Height	mm	1870	2210	2210	2210	2210
Weight	Loading Weight	kg	460	830	840	845	870

Cooling Circuit

Ekin Endüstriyel takes its power in cooling groups from its own domestically produced plate and tube heat exchangers. Since it is the leading domestic company in the heat exchanger sector, it can reach the highest efficiency solutions with the least energy in the cooling groups, with its years of experience and the special heat transfer methods it uses in its heat exchangers.

MIT brazed plate heat exchangers are designed for cooling, ventilation and heating processes and have been used safely in these systems for years.

Data

- Min. Temperature: -196 °C
- Max. Temperature: +200 °C
- Withstand Pressure of the Design: 30 - 70 bar
- Suitable for standard and high pressures
- Cooling Capacity
- Connection Method: Threaded, Brazed
- Copper, Nickel and Stainless Steel

Documents

- CE Certificate (PED) 97/23/EC
- UL
- ISO 9001:2015

Structure of Plate Heat Exchangers

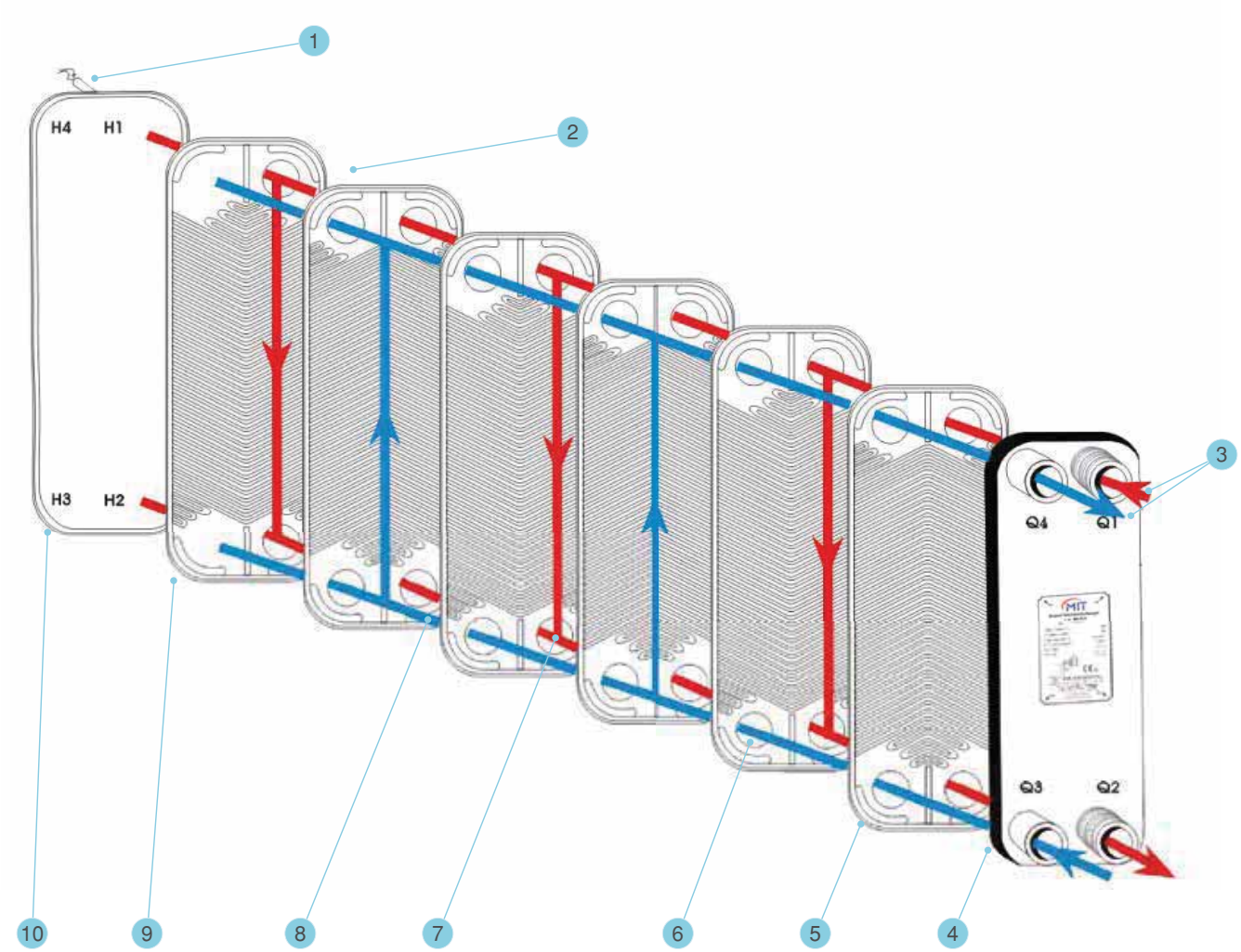

1	Extra Temperature Control Interface
2	Metal Plates: It is corrugated to increase heat transfer. Flow Channels: It is used between two consecutive plates of the same type or in combination.
3	Water Cooler
4	Front Shell Plate
5	Head Cover
6	Corner Holes
7	Fluid Channels
8	Cooling Channels
9	Back Plate
10	Back Shell Plate

Shell and Tube Evaporators

BE Tube Type Evaporators

Ekin Endüstriyel BE type evaporators have basic capacity and geometry options up to 1500 kW. They can be manufactured with 4 cooling circuits.

Suitable refrigerants are all HFCs and HCFCs. Special counter flow and high heat transfer efficiency evaporators are manufactured for R124a gas.

The detachable pipe bundle provides maintenance and cleaning opportunities. For non-catalog special order products, please contact our company.

EKİN ENDÜSTRİYEL

COOLING TOWERS

ENERGY SYSTEMS

Operating Principle

Cooling towers are structures designed to provide cooling water in industrial facilities and living spaces of various purposes and sizes. Water cooling towers are systems that reduce the process water to wet bulb temperature by spraying the hot water from the system on the fill and removing the heat from the environment to be emitted to the atmosphere.

How Does Water Cooling Towers Work?

Water cooling towers are divided into two, as counter flow and cross flow towers according to their working principles. In counter-flow water cooling towers, the air moves from the bottom up while the water is filtered from top to bottom. In cross flow water cooling towers, the air flow is horizontal as the water descends from the top. In recent years, counter-flow towers have been preferred.

In forced draft counter flow type water cooling towers, the water coming from the facility is sprayed homogeneously from top to bottom on the entire section of the tower with the help of specially manufactured water distribution system and sprinklers. The sprayed water bodies are broken up by filtering through the tower fills. The air with the humidity of the outside environment is sucked from the bottom up over the fillings with the help of the engine fan group. The water, which meets the air on the filling cooling surface, cools by giving heat to the air and a small part of it evaporates. The cooled water is collected in the cold water pool of the tower and sent to the facility. As a result of the evaporation of the water, the air whose humidity is increased (close to the saturation rate) is thrown into the atmosphere from the fan chimney at the top of the tower.

Equipment Used in Water Towers

Hot Water Distribution Systems

Minimum pumping pressure and long operating life are ensured by the water distribution system with hot galvanized or epoxy painted steel construction, natural flow, closed base and overflow system. Natural flow water distribution is made with specially designed polypropylene sprinklers.

Air Intake Louvers

Air intake louvers are made of hot galvanized or epoxy painted, sheet metal and designed to regulate the air flow uniformly and minimize the icing problem.

Herringbone Separator

Since the separators made of plastic polystyrene direct the air well, low power is drawn from the fan. It is easy to control and maintain. Since the separators are mounted as double-pass, they hold the water in the air very well. Friction loss is below 02%.

Separators can be specially made of PVC. The high-performance filler, produced from plastic-filled polystyrene, was specially designed and manufactured to keep the water-air contact at the maximum level. It can also be made of PVC upon special request.

Tower Shell

Its design and construction ensure maximum strength and ease of transport. The tower shell consists of the pools and the upper shell. It is produced with epoxy paint against corrosion as standard, but it can also be manufactured from hot galvanized steel upon special request.

Fan

Specially designed for towers; it is made of silent, statically and dynamically fully balanced, corrosion-resistant material.

Up to MIT-SK 19 type, they are directly coupled; other types are driven by belt-pulley assembly.

Fan Protector

To prevent foreign matter from entering, the pitched fan guard is manufactured in a detachable type with aerodynamic structure made of round profiled iron.

Fan Cylinder

It is designed to ensure that the air enters the area easily, thus ensuring the efficient operation of the tower.

Water Filter

It is mounted on the pool suction to ensure that the water that will go to the pumps is cleaned of foreign materials.

Entry - Exit Branch

The hot water inlet is mounted in the upper pool, and the cold water outlet is mounted in the lower pool.

Armatures

It consists of a feed floater that can meet evaporation and drift losses, and transport and discharge connections.

Water cooling towers are generally used in the following industries:

- Iron and Steel Industry
- Petrochemical Plants
- Energy Sector
- Textile Sector
- Food and Beverage Industry
- Automotive Industry
- Glass Industry
- Mining & Chemical Industries
- Plastic & Packaging Industry
- Business and Shopping Centers
- Hotels and Social Facilities
- Air Handling Units

Technical Data

MIT SK 1 Series (Model 13 - 19)

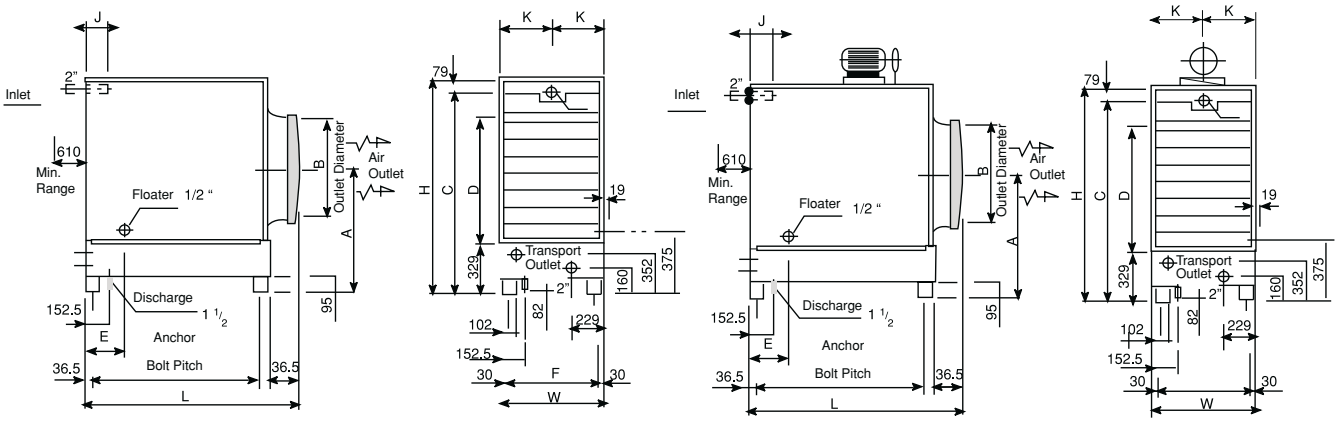

SIZE CHART												
Tower Model	External Dimensions				Tower Dimensions							
No.	W	L	H	A	B	C	D	E	F	G	J	K
MIT-SK 13	556	1250	1032	605	470	952	422	165	495	957	152	278
MIT-SK 15	556	1250	1307	757	470	1227	695	165	495	919	101	298
MIT-SK 17	664	1398	1307	757	570	1227	695	252	603	1065	190	332
MIT-SK 19	664	1397	1583	932	570	1503	9715	252	603	1065	143	332

ENGINEERING DATA										
Tower Model	Tower Weight (kg)		Fan Data		Motor 380 V 50 Hz Hp	Pump Pressure Head (mm SS)	m^3/h		Water Level	
	Net	When Filled	Diameter	n^d/d			Min.	Max.	While Operational	Overflow (mm)
MIT-SK 13	115	222	460	1410	1/2	1100	2,7	4,5	(mm)	197
MIT-SK 15	130	244	460	1410	1/2	1450	4	6,6	102	197
MIT-SK 17	155	303	560	1395	1	1550	5	8,1	102	197
MIT-SK 19	190	350	560	1122	1,5	2180	8,8	14,3	102	197

PIPE OUTPUT VALUES				
Tower Model	Hot Water Inlet	Cold Water Outlet and Overflow	Emptying	Floater
MIT-SK 13	1 1/2”	1 1/2”	1 1/2”	1/2”
MIT-SK 15	1 1/2”	1 1/2”	1 1/2”	1/2”
MIT-SK 17	2”	2”	2”	1/2”
MIT-SK 19	2”	2”	2”	1/2”

MIT SK 2 Series

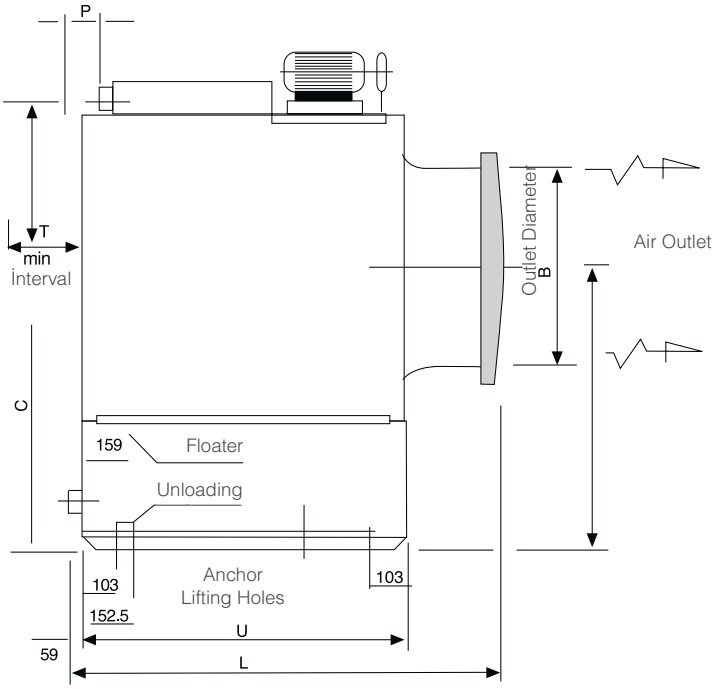

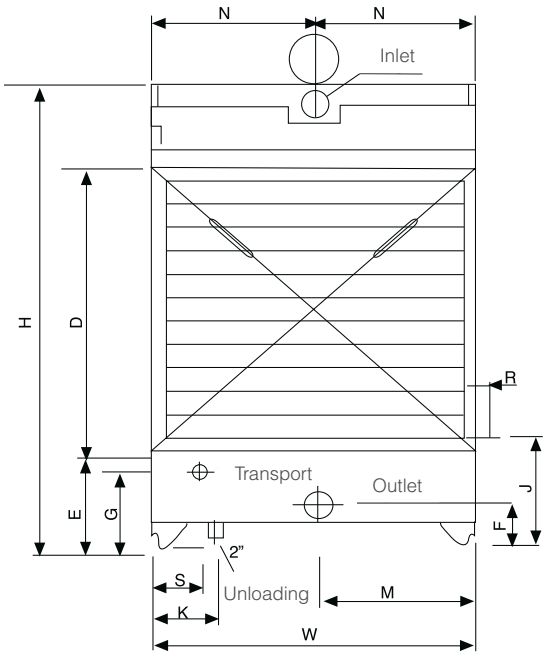

SIZE CHART																			
Tower Model	External Dimensions			Tower Dimensions															
No.	W	L	H	A	B	C	D	E	F	G	J	K	M	N	P	R	S	T	U
MIT-SK 21	962	1810	1651	922	785	1548	851	410	191	318	264	219	585	481	156	19	219	1219	1368
MIT-SK 23	1170	1915	1651	949	932	1548	851	410	191	318	264	219	585	586	251	22	219	1828	1465
MIT-SK 25	1170	1915	1651	949	932	1548	851	410	191	318	264	219	585	586	251	22	219	1828	1465
MIT-SK 27	1170	1915	2222	1200	932	2120	1461	410	191	318	264	219	585	586	152	22	219	1828	1465
MIT-SK 29	1170	2161	2244	1244	932	2145	1473	410	191	346	546	219	585	586	152	25	219	1828	1710
MIT-SK 31	1460	2248	2273	1362	1232	2168	1422	470	216	397	546	219	730	730	152	25	219	1828	1710
MIT-SK 33	1460	2248	2273	1362	1232	2168	1422	470	216	397	546	219	730	730	152	25	219	1828	1710
MIT-SK 35	1910	2527	2237	1362	1232	2168	1422	470	216	397	546	219	955	955	159	25	219	1828	1990
MIT-SK 37	2432	2723	2324	1413	1232	2219	1384	522	216	436	594	1089	1673	1216	244	25	1089	2134	2186

ENGINEERING DATA										
Tower Model	Tower Weight (kg)		Fan Data		Motor 380 V 50 Hz Hp	Pump Pressure Head (mm SS)	m^3/h		Water Level	
	Net	When Filled	Diameter	n^d/d			Min.	Max.	While Operational	Overflow (mm)
MIT-SK 21	298	537	760	820	1,5	1700	9,5	18,1	102	243
MIT-SK 23	345	719	915	625	1,5	1735	12,5	23,4	102	243
MIT-SK 25	347	721	915	785	3	1780	15,9	29,7	102	243
MIT-SK 27	413	807	915	785	3	2470	20,6	39,3	102	243
MIT-SK 29	485	907	915	785	3	2620	23,6	45	127	271
MIT-SK 31	600	1148	1220	550	3	2500	28,8	57,7	127	322
MIT-SK 33	603	1183	1220	645	5,5	2500	37,9	76,5	127	322
MIT-SK 35	836	1753	1220	660	7,5	2620	45,4	90,9	127	322
MIT-SK 37	1160	2488	1220	635	7,5	2780	59,5	119	179	362

PIPE OUTPUT VALUES				
Tower Model	Hot Water Inlet	Cold Water Outlet and Overflow	Emptying	Floater
MIT-SK 21	4	4	2	1/2”
MIT-SK 23	4	4	2	1/2”
MIT-SK 25	4	4	2	1/2”
MIT-SK 27	4	4	2	1/2”
MIT-SK 29	4	4	2	3/4”
MIT-SK 31	6	6	2	3/4”
MIT-SK 33	6	6	2	3/4”
MIT-SK 35	6	6	2	3/4”
MIT-SK 37	6	6	2	3/4”

Certificates


Sertifika
Certificate
EKİN ENDÜSTRİYEL ISITMA SOĞUTMA SANAYİ VE TİCARET LİMİTED ŞİRKETİ
ISO 9001:2015


Sertifika
Certificate
EKİN ENDÜSTRİYEL ISITMA SOĞUTMA SANAYİ VE TİCARET LİMİTED ŞİRKETİ
ISO 14001:2015


Certificate of Registration
OCCUPATIONAL HEALTH AND SAFETY MANAGEMENT SYSTEM
EKİN ENDÜSTRİYEL ISITMA SOĞUTMA SAN. VE TİC. LTD. ŞTİ.
OHSAS 18001:2007


CERTIFICATE
EKİN ENDÜSTRİYEL ISITMA SOĞUTMA SAN. VE TİC. LTD. ŞTİ.
ISO 10002:2018


CERTIFICATE
EKİN ENDÜSTRİYEL ISITMA SOĞUTMA SAN. VE TİC. LTD. ŞTİ.
ISO 50001:2018


TÜRK STANDARDLARI ENSTİTÜSÜ
TÜRK STANDARDLARINA UYGUNLUK BELGESİ
TURKISH STANDARDS INSTITUTION
CERTIFICATE OF CONFORMITY TO TURKISH STANDARDS

BELGE NUMARASI / REFERENCE NUMBER OF LICENCE	011181-TSE-03/01
BELGENİN İLK VERİLİŞ TARİHİ / DATE OF FIRST ISSUE OF LICENCE	27.02.2019
BELGENİN SON GEÇERLİLİK TARİHİ / LICENCE VALID UNTIL	27.02.2022
BELGE SAHİBİ KURULUŞUN ADI / NAME OF THE LICENCE HOLDER	EKİN ENDÜSTRİYEL ISITMA SOĞUTMA SAN.VE TİC.LTD.ŞTİ.
BELGE SAHİBİ KURULUŞUN ADRESİ / ADRESS OF THE LICENCE HOLDER	DUDULLU OSB MAH. DES-107 SK. NO:2 ÜMRANİYE İSTANBUL/TÜRKİYE
ÜRETİM YERİ ADI / NAME OF THE MANUFACTURING PLACE	EKİN ENDÜSTRİYEL ISITMA SOĞUTMA SAN.VE TİC.LTD.ŞTİ.
ÜRETİM YERİ ADRESİ / ADRESS OF THE MANUFACTURING PLACE	DUDULLU OSB MAH. DES-107 SK. NO:2 ÜMRANİYE İSTANBUL/TÜRKİYE
İPTAL EDİLEN BELGE NUMARASI (Varsa) / INDICATION OF SUPERSEDED LICENCE (if any)	
TESCİLLİ TİCARİ MARKASI / REGISTERED TRADE MARK	MIT+Şekil ibareli
İLGİLİ TÜRK STANDARDI / RELATED TURKISH STANDARD	TS 736 / 02.04.2015

BELGE KAPSAMI / SCOPE OF LICENCE
Sıcak Su Kazanları (Boyler)
- Tanıl : 1 Paslanmaz
- Sınıf : 3 Cebri akım
- Tip 1: Tek odacık borusuz ev tipi (Hoy 6),
- Tip 2: Çift odacıklı borulu (Hoy 1),
- Sınıf : 1 Sıcak su kazanları,
- Sınıf : 3 Buhar ve sıcak bir arada kazanlar,
- Cinsi: Sabit kapasite, çift odacıklı ve borulu yan (Hoy 1),
- Biçim : 1 Katı yakıt kazanlarda kullanılan (Hoy 1),
- Biçim : 2 Sıvı yakıt kazanlarda kullanılan (Hoy 6),
- Korozyona Karşı Koruma : " 0" Bakımlı korumalı emayel.

e-imzalı/e-signed
10.03.2021
Belgelendirme Merkezi Başkanı Adına
VOLKAN GÜLEÇ
MAKİNA SEKTÖRÜ MÜDÜRÜ


TÜRK STANDARDLARI ENSTİTÜSÜ
HİZMET YETKİNLİK BELGESİ

Belge No	:34-HYB-4258
İlk Veriliş Tarihi	:5.05.2010
Son Geçerlilik Tarihi	:6.05.2022
Firmanın Adı	:EKİN ENDÜSTRİYEL ISITMA SOĞUTMA SAN.VE TİC.LTD.ŞTİ.
Firmanın Adresi	:DUDULLU OSB MAH. DES-107 SK. NO:2 ÜMRANİYE İSTANBUL/TÜRKİYE
Hizmet Yeri Adresi	:DUDULLU OSB MAH. DES-107 SK. NO:2 ÜMRANİYE İSTANBUL/TÜRKİYE
Sicil No	:568931

Verilen Hizmetin Kapsamı

1. TS 12676 (10.04.2013) YETKİLİ SERVİSLER - KAZANLAR VE ISI DEĞİŞTİRİCİLER (EŞANJÖRLER) İÇİN - KURALLAR STANDARDINA UYGUN HİZMET VEREN
* EKİN ENDÜSTRİYEL ISITMA SOĞUTMA SANAYİ VE TİCARET LTD. ŞTİ. YETKİLİ SERVİSİ (106404) (06.05.2016) (MIT) MARKALI

Türk Standardları Enstitüsü Hizmet Belgelendirme Yönergesine göre yapılan incelemeye neticesinde; firma ilgililerin, kapsamında belirtilen, hizmetler için yetkili olduğu başvurusunda bu belge verilmiştir.

e-imzalı/e-signed
02.06.2021
KADİR ÜNSAL
ANADOLU YAKASI HİZMET YERİ BELGELENDİRME MÜDÜRÜ V.

TSE Kalite Kampüsü Cumhuriyet Mah. 2258 Sk. No:10 A-Blok, Çayırova Tren İstasyonu Yanı Gebze-KOCAELİ Telefon: 262 7231313 Faks: 262 7231616

Bu belge hiçbir suretle tahrif edilemez, kısmen veya okunmasını zorlaştıracak şekilde çoğaltılamaz, kısmen ve silinti yapılamaz. Sayfa : 1 / 1

https://vrvalidasyon1.tse.org.tr/BelgeDogrulama.aspx?prvKeyBelgeId adresinden belgenin doğruluğunu ve geçerliliğini sorgulayınız.
Firmaya ait diğer yetkı bilgilerini https://hizmetsorgu1.tse.org.tr/GenelFirmaSorgu.aspx adresinden sorgulayabilirsiniz


TÜRK STANDARDLARI ENSTİTÜSÜ
TÜRK STANDARDLARINA UYGUNLUK BELGESİ
TURKISH STANDARDS INSTITUTION
CERTIFICATE OF CONFORMITY TO TURKISH STANDARDS

BELGE NUMARASI / REFERENCE NUMBER OF LICENCE	011181-TSE-02/03
BELGENİN İLK VERİLİŞ TARİHİ / DATE OF FIRST ISSUE OF LICENCE	07.06.2018
BELGENİN SON GEÇERLİLİK TARİHİ / LICENCE VALID UNTIL	07.06.2022
BELGE SAHİBİ KURULUŞUN ADI / NAME OF THE LICENCE HOLDER	EKİN ENDÜSTRİYEL ISITMA SOĞUTMA SAN.VE TİC.LTD.ŞTİ.
BELGE SAHİBİ KURULUŞUN ADRESİ / ADRESS OF THE LICENCE HOLDER	DUDULLU OSB MAH. DES-107 SK. NO:2 ÜMRANİYE İSTANBUL/TÜRKİYE
ÜRETİM YERİ ADI / NAME OF THE MANUFACTURING PLACE	EKİN ENDÜSTRİYEL ISITMA SOĞUTMA SAN.VE TİC.LTD.ŞTİ.
ÜRETİM YERİ ADRESİ / ADRESS OF THE MANUFACTURING PLACE	KIRKLARELİ ORG. SAN. BÖLGESİ 6. CADDE NO:14 KIZILCIKDERE OSB MEVKİİ MERKEZ KIRKLARELİ/TÜRKİYE
İPTAL EDİLEN BELGE NUMARASI (Varsa) / INDICATION OF SUPERSEDED LICENCE (if any)	011181-TSE-02/02
TESCİLLİ TİCARİ MARKASI / REGISTERED TRADE MARK	MIT ŞEKİL
İLGİLİ TÜRK STANDARDI / RELATED TURKISH STANDARD	TS EN 13831 / 09.11.2010

BELGE KAPSAMI / SCOPE OF LICENCE
MIT TİCARİ MODELLİ, EN YÜKSEK ÇALIŞMA BASINCI 10 BAR OLAN, SU TESİSATLARI İÇİN DİYAFRAMLI KAPALI GENLEŞME TANKI

e-imzalı/e-signed
22.06.2021
Belgelendirme Merkezi Başkanı Adına
ÖMER FARUK DUMAN
SAKARYA BELGELENDİRME MÜDÜRÜ

https://vrvalidasyon1.tse.org.tr/BelgeDogrulama.aspx?prvKeyBelgeId adresinden belgenin doğruluğunu ve geçerliliğini sorgulayınız. 1 / 1


TSEK
TÜRK STANDARDLARI ENSTİTÜSÜ
KRİTERE UYGUNLUK BELGESİ
TURKISH STANDARDS INSTITUTION
CERTIFICATE OF CONFORMANCE TO CRITERIA

e-imzalı/e-signed
08/04/2021
Belgelendirme Merkezi Başkanı Adına
ERCİL KAYGU
LAMİNASYON BELGELENDİRME MÜDÜRÜ

Certificates

TÜRK STANDARDLARI ENSTİTÜSÜ
TÜRK STANDARDLARINA UYGUNLUK BELGESİ
TURKISH STANDARDS INSTITUTION
CERTIFICATE OF CONFORMITY TO TURKISH STANDARDS

BELGE NUMARASI / REFERENCE NUMBER OF LICENCE: 011181-TSE-04/01
BELGENİN İLK VERİLİŞ TARİHİ / DATE OF FIRST ISSUE OF LICENCE: 16.12.2019
BELGENİN SON GEÇERLİLİK TARİHİ / LICENCE VALID UNTIL: 30.06.2022
BELGE SAHİBİ KURULUŞUN ADI / NAME OF THE LICENCE HOLDER: EKIN ENDUSTRIYEL ISITMA SOĞUTMA SAN.VE TIC.LTD.ŞTI.
BELGE SAHİBİ KURULUŞUN ADRESİ / ADRESS OF THE LICENCE HOLDER: DUDULLU OSB MAH. DES-107 SK. NO:2 ÜMRANIYE İSTANBUL/TÜRKİYE
ÜRETİM YERİ ADI / NAME OF THE MANUFACTURING PLACE: EKIN ENDUSTRIYEL ISITMA SOĞUTMA SAN.VE TIC.LTD.ŞTI.
ÜRETİM YERİ ADRESİ / ADRESS OF THE MANUFACTURING PLACE: KIRKLARELİ ORG. SAN. BÖLGESİ 6. CADDE NO:14 KEŞİCİKDERE OSB MEVKİİ MERKEZ/KIRKLARELİ /TÜRKİYE
İPTAL EDİLEN BELGE NUMARASI (Varsa) / INDICATION OF SUPERSEDED LICENCE (if any): mit yokl
TESCİLLİ TİCARİ MARKASI / REGISTERED TRADE MARK: mit yokl
İLGİLİ TÜRK STANDARDI / RELATED TURKISH STANDARD: TS EN 303-1 / 23.11.2000 – TS EN 303-3 / 06.02.2001
BELGE KAPSAMI / SCOPE OF LICENCE:
- 45,000 Kcal/h (48,51 Kw) (Dahil) den, 860,000 Kcal/h (1000 Kw) (Dahil) e Kadar Olan Çelik Gövdeli, Yalnız 3,4,5,6 Bar Çalışma Basınçlı Sıcak Su Kazanları(TWG Modeli) — 2 Geçişli, Gaz
- 45,000 Kcal/h (48,51 Kw) (Dahil) den, 860,000 Kcal/h (1000 Kw) (Dahil) e Kadar Olan Çelik Gövdeli, Yalnız 3,4,5,6 Bar Çalışma Basınçlı Sıcak Su Kazanları(TLG Modeli) — 3 Geçişli, Gaz

e-mzalı/e-signed
09.07.2021
Belgelendirme Merkezi Başkanı Adına
Mustafa BAYRAM
TSE MALATYA BELGELENDİRME MÜDÜRÜ V.

TÜRK STANDARDLARI ENSTİTÜSÜ
TÜRK STANDARDLARINA UYGUNLUK BELGESİ
TURKISH STANDARDS INSTITUTION
CERTIFICATE OF CONFORMITY TO TURKISH STANDARDS

BELGE NUMARASI / REFERENCE NUMBER OF LICENCE: 011181-TSE-05/01
BELGENİN İLK VERİLİŞ TARİHİ / DATE OF FIRST ISSUE OF LICENCE: 30.12.2019
BELGENİN SON GEÇERLİLİK TARİHİ / LICENCE VALID UNTIL: 30.06.2022
BELGE SAHİBİ KURULUŞUN ADI / NAME OF THE LICENCE HOLDER: EKIN ENDUSTRIYEL ISITMA SOĞUTMA SAN.VE TIC.LTD.ŞTI.
BELGE SAHİBİ KURULUŞUN ADRESİ / ADRESS OF THE LICENCE HOLDER: DUDULLU OSB MAH. DES-107 SK. NO:2 ÜMRANIYE İSTANBUL/TÜRKİYE
ÜRETİM YERİ ADI / NAME OF THE MANUFACTURING PLACE: EKIN ENDUSTRIYEL ISITMA SOĞUTMA SAN.VE TIC.LTD.ŞTI.
ÜRETİM YERİ ADRESİ / ADRESS OF THE MANUFACTURING PLACE: KIRKLARELİ ORG. SAN. BÖLGESİ 6. CADDE NO:14 KEŞİCİKDERE OSB MEVKİİ MERKEZ/KIRKLARELİ /TÜRKİYE
İPTAL EDİLEN BELGE NUMARASI (Varsa) / INDICATION OF SUPERSEDED LICENCE (if any): mit yokl
TESCİLLİ TİCARİ MARKASI / REGISTERED TRADE MARK: mit yokl
İLGİLİ TÜRK STANDARDI / RELATED TURKISH STANDARD: TS EN 303-1 / 23.11.2000 – TS EN 303-2 / 30.01.2001
BELGE KAPSAMI / SCOPE OF LICENCE:
- 45,000 Kcal/h (52,32 Kw) (Dahil) Den 510,000 Kcal/h (593,02 Kw) (Dahil) e Kadar Olan Çelik Gövdeli, 3 Geçişli, Sıvı Yakıtlı 3,4,5,6 Bar Çalışma Basınçlı Sıcak Su Kazanları (TLG Modeli)

e-mzalı/e-signed
09.07.2021
Belgelendirme Merkezi Başkanı Adına
Mustafa BAYRAM
TSE MALATYA BELGELENDİRME MÜDÜRÜ V.

TÜRK STANDARDLARI ENSTİTÜSÜ

TASARIM TİP ONAY SERTİFİKASI
CERTIFICATE of TYPE APPROVAL
No: TR/TSE02*0003/31A

SZUTEST CE 2199
EU CERTIFICATE
AB SERTİFİKASI
2186-PED-2005701-4

SZUTEST CE 2195
EU DECLARATION OF CONFORMITY TO TYPE
AB TİPE UYGUNLUK BEYANI
2199-LAR-1938201

TÜV NORD
CERTIFICATE
Internal production control plus supervised pressure equipment checks at random intervals - module A2 - according to directive 2014/68/EU
Certificate No.:
Name and address of manufacturer: Ekin Endüstriyel Isıtma Soğutma San. Tic. Ltd. Şti. Dudullu Organize Sanayi Bölgesi Des Sanayi Sitesi 107 Sk. B14 Blok No: 2 İSTANBUL/TURKEY
After having examined the preconditions, the manufacturer is entitled to mark the pressure equipment produced within the range of the pedd of the module with the following mark
0045
Test specification: EN 13445
Test report No.:
Description of pressure equipment: PLATE HEAT EXCHANGER
MT Series (for Model List See Annex I)
Place of manufacture: Dudullu Organize Sanayi Bölgesi Des Sanayi Sitesi 107 Sk. B14 Blok No: 2 İSTANBUL/TURKEY
This certificate is only valid in connection with the annual report of the supervised pressure equipment checks.

Certificate of Registration
CERTIFICATE OF CONFORMITY
TECHNICAL FILE TEKNİK DOSYA UYGUN LUK SERTİFİKASI
Certificate No: PC-1059
CE
EKİN ENDÜSTRİYEL ISITMA SOĞUTMA SAN. VE TIC.LTD.ŞTİ.
Product and designation of type
Istanbul Kalite International Certification Co., Ltd.

Certificate of Registration
CE
EKİN ENDÜSTRİYEL ISITMA SOĞUTMA SAN. VE TIC.LTD.ŞTİ.

Certificate of Registration
CE
EKİN ENDÜSTRİYEL ISITMA SOĞUTMA SAN. VE TIC.LTD.ŞTİ.

Certificates


Certificate of Registration
CERTIFICATE OF CONFORMITY
Certificate No: PC.1080
CE
EKİN ENDÜSTRİYEL ISITMA SOĞUTMA SAN. VE TİC.LTD.ŞTİ.


Certificate of Registration
CE
EKİN ENDÜSTRİYEL ISITMA SOĞUTMA SAN. VE TİC.LTD.ŞTİ.


Certificate of Registration
CE
EKİN ENDÜSTRİYEL ISITMA SOĞUTMA SAN. VE TİC.LTD.ŞTİ.


Certificate of Registration
CERTIFICATE OF CONFORMITY
Certificate No: PC.1066
CE
EKİN ENDÜSTRİYEL ISITMA SOĞUTMA SAN. VE TİC.LTD.ŞTİ.


Certificate of Registration
CE
EKİN ENDÜSTRİYEL ISITMA SOĞUTMA SAN. VE TİC.LTD.ŞTİ.


Certificate of Registration
Page 1 / 2
CERTIFICATE OF CONFORMITY
Certificate No: PC.1015
CE
EKİN ENDÜSTRİYEL ISITMA SOĞUTMA SAN. VE TİC.LTD.ŞTİ.

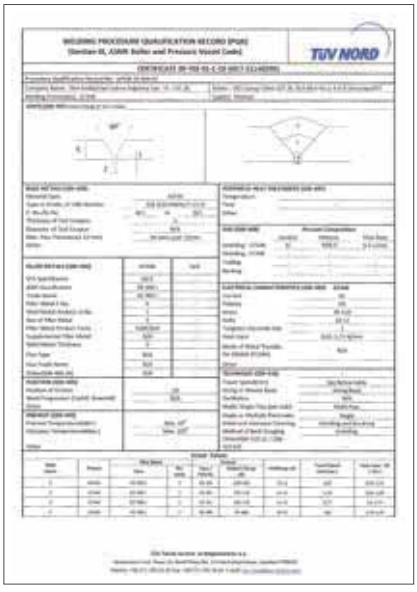
TÜV NORD


TÜV NORD


TÜV NORD

Certificates

A chain is only as strong as its weakest link.

Running and maintaining a quality production process that meets international standards requires focusing on quality all along the ecosystem. Maintaining this focus requires a unifying vision of constant improvement shared by all stakeholder, and a certain level of expertise for all parties involved. Ekin Academy was established with the principles of continuous development and growing together to share the knowledge and experience that will realize this vision.

We support the development of our employees with training programs that directly contribute to the results in their business processes and make a difference in their personal development. We offer technical trainings on heat transfer, pressure vessels, package systems, food systems and liquid transfer. We help them become individuals who will make a difference with our development programs that covers topics like leadership, strategy, sales and many more. In addition, we provide information regarding installation, operating, maintenance and repairs with our pre and after sales training modules prepared for our business partners and customers.

At Ekin Academy we do not solely focus on the development of our staff, partners and customers. Thanks to our university collaborations, we provide the means for future engineers to put their theoretical knowledge to use with practical applications.

We organize seminars, conferences and trainings for professional chambers, and institutions we collaborate on social responsibility projects. Because we know that only by investing in the society, the industry and the future of the industry, we can become a country known for its high-quality engineering products.

Sales Team

An Engineering Approach from Sales to Maintenance

We offer value added pre and after sale services with our customer satisfaction-oriented approach and deep expertise we are more than happy to share. Thanks to our expert engineers that provide proactive solutions, we focus on making a difference throughout the process, from presales to maintenance.

With our “quality product, quality service, quality solution” approach, we are more than a manufacturer and supplier, we are a highly motivated solution partner for all kinds of heating and cooling projects.

Customer Satisfaction

Our priority is to ensure customer satisfaction and protect the rights of our customers with our pre-sales processes that analyze customer needs well, quality-registered product range, expert staff and meticulous working methods.

Ethical Values

We conduct all our activities in accordance with the laws and then with ethical values. We believe in growing together and we look for mutual benefit in all our business relationships.

Privacy Policy

All your personal information shared with our company is guaranteed by our ethical values and our processes in compliance with the Law No. 6698 on Protection of Personal Data.

Information Security

All our information technology operations are protected by our information security processes, which are managed in accordance with ISO 27001 Information Security Management System requirements.

Professional System Solution Center

From our MIT professional system solution center, you can get help with problems with your pumps, heat exchangers and your system. Our solution center consisting of our expert engineers will be happy to help you.

- Domestic hot water installations.
- Central and district heating systems.
- Milk, yogurt, heating, cooling and pasteurization systems.
- Industrial cooling and heating systems.
- Oil cooling systems.
- Energy recovery systems.
- Pool heating systems.
- Steam installations.

It is vital for your system to be designed and implemented correctly in the first installation in order to be able to operate at the desired capacity, smoothness and long life. For this reason, you can get first-hand the technical support you need during the installation phase of your system and the problems that may arise in the business; You can reach us **24 hours +90 (216) 232 24 12 in 7 days**.

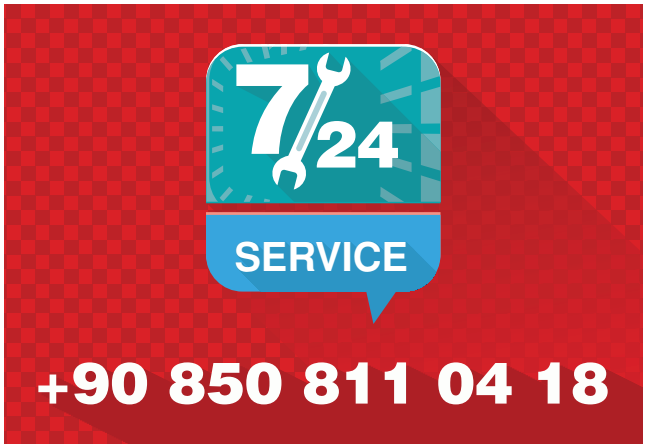

We would like to reiterate that we will be happy to share our knowledge accumulated over many years with our valued customers in order for your system to work correctly and performance.

Ekin will continue to be the best solution partner for you in all applications with all kinds of heating and cooling applications.

Producer; reserves the right to change the product features, technical dimensions and information and installation diagrams specified in this catalog without notice. No specified information can be copied and used without the permission of the manufacturer. In no way can the manufacturer be held responsible by giving examples of technical information and diagrams. In case of need, we request you to request a special technical drawing for your project for exact dimensions.

/ ekinendustriyel

Follow us on **social media...**

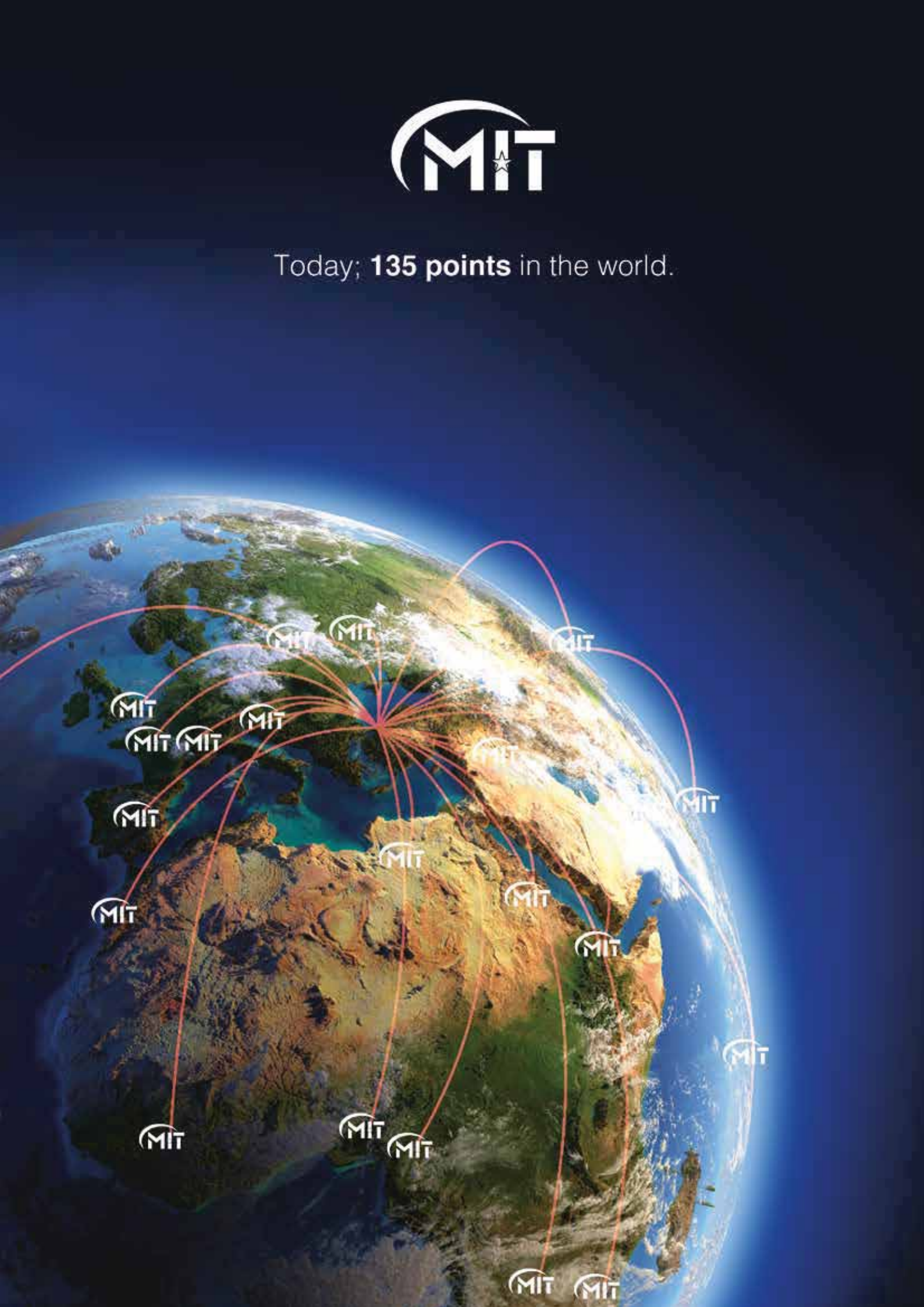
MIT
Today; 135 points in the world.

444 EKİN 3546

EKİN ENDÜSTRİYEL
Isıtma-Soğutma San. Tic. Ltd. Şti.

Dudullu Organize Sanayi Bölgesi - Des Sanayi Sitesi
107. Sk. B14 Blok No: 2 Ümraniye / İstanbul / Turkey
Phone: +90 216 232 2412 **Fax:** +90 216 660 1308
info@ekinendustriyel.com - **www.ekinendustriyel.com**